A. C. SAMSON & R. J. PRENDERGAST.

CUTTING BLOCK FOR PRINTING MACHINES.

APPLICATION FILED MAR. 6, 1914.

1,147,817. Patented July 27, 1915.

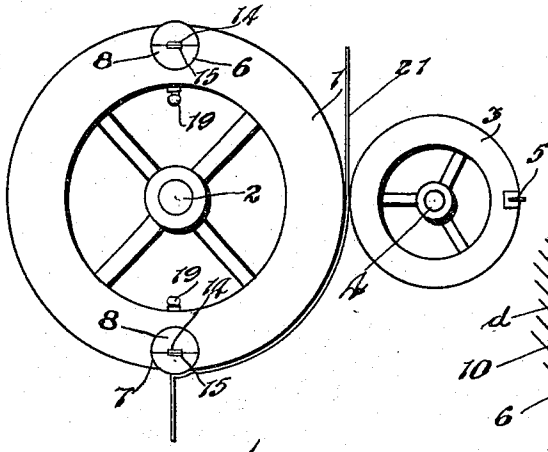

Fig. 1.

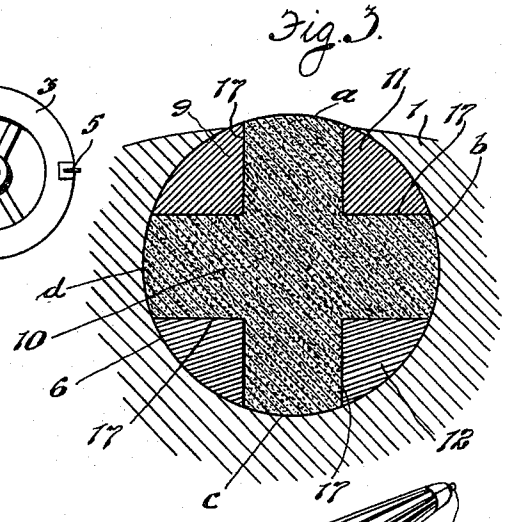

Fig. 3.

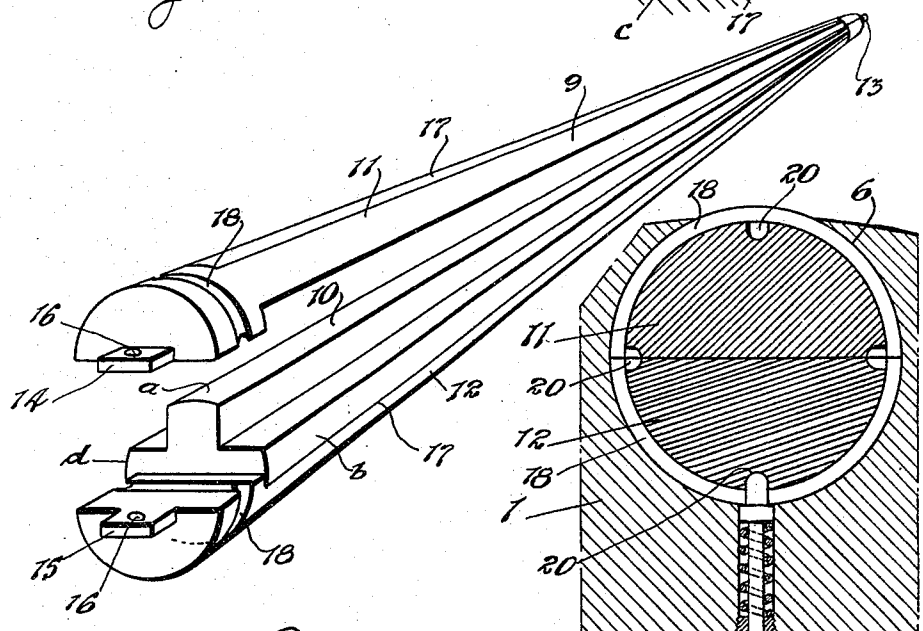

Fig. 2.

Fig. 4.

WITNESSES

Roland Foster

J. S. Poythress.

INVENTORS

A. C. Samson

R. J. Prendergast

By Fred B. Fahnestock Attorney.

COLUMBIA PLANOGRAPH CO., WASHINGTON, D. C.

UNITED STATES PATENT OFFICE.

ALLAN CONNELL SAMSON AND RICHARD JOSEPH PRENDERGAST, OF WINNIPEG, MANITOBA, CANADA.

CUTTING-BLOCK FOR PRINTING-MACHINES.

1,147,817. Specification of Letters Patent. **Patented July 27, 1915.**

Application filed March 6, 1914. Serial No. 822,996.

To all whom it may concern:

Be it known that we, ALLAN CONNELL SAMSON and RICHARD JOSEPH PRENDERGAST, both of the city of Winnipeg, in the Province of Manitoba, Canada, have invented certain new and useful Improvements in Cutting-Blocks for Printing-Machines, of which the following is the specification.

The invention relates to improvements in cutting blocks for printing presses and the object of the invention is to provide a cutting block which can be readily inserted in or dismounted from the folding cylinder of the press and also one which will permit of the quick and easy adjustment of the cutting strip without requiring the removal of the block from the folding cylinder.

With the above objects in view the invention consists essentially in a sectional more or less cylindrical hinged casing presenting suitable longitudinally disposed slots, a cutting strip normally contained within the casing and entering the slots and releasable means carried by the cylinder effecting the locking of the casing against rotation around its longitudinal axis and also the locking of the casing against end movement, the parts being arranged and constructed as hereinafter more particularly described and later pointed out in the appended claims.

Figure 1 represents an end view of the ordinary folding cylinder and adjoining knife cylinder with our invention applied. Fig. 2 represents a perspective view of the cutting block removed from the cylinder and partially open. Fig. 3 is an enlarged detailed vertical sectional view through the cutting block and a portion of the containing cylinder. Fig. 4 represents a vertical sectional view through one end of the cutting block and a portion of the containing cylinder.

In the drawing like characters of reference indicate corresponding parts in each figure.

1 represents the ordinary folding cylinder of a press mounted on the shaft 2 and 3 represents the ordinary knife cylinder of a press mounted on the shaft 4 and provided with a knife 5.

The face of the folding cylinder is supplied with a pair of diametrically opposing channels 6 and 7 more or less circular in cross section, each of which is designed to receive a cylindrical cutting block 8 now described in detail. The cutting block comprises a split cylindrical casing 9 which contains normally a rubber or such like cutting strip 10. The casing is formed from two complementary sections 11 and 12 hinged together at the back end at 13 and fitted at the front end with a pair of mating lugs 14 and 15 supplied with opposing openings 16 for a purpose later explained. The body of the casing is supplied in the present instance with four diametrically opposing slots 17 designed to receive the cutting strip which it will be noticed is in the form of a "cross" in cross section. The ends of the cutting strip butt against the ends of the casing when it is closed. In actual practice the channels 6 and 7 are cut so that the face of the cutting block will protrude through the face of the cylinder a short distance and will expose the cutting strip. The forward end of the block is supplied with a circumferentially directed groove formed half in each section of the casing.

19 is a spring pressed locking pin carried by the rim of the cylinder 1 and having the inner end thereof normally received within one or other of the four sockets 20 formed in the base of the groove, there being a socket provided for each arm of the cutting strip.

The device is used in the following way: Prior to inserting the casing in the cylinder the sections are opened on the hinge far enough to admit of the insertion of a cutting strip 10 which will be placed initially in the lower half of the casing filling the slots. The upper half of the casing is then closed down so that the cutting strip is entirely contained within the casing but presents four cutting surfaces indicated by the reference characters *a*, *b*, *c* and *d*. One end of the casing is then inserted in the channel of the cylinder and it is slid endwise until it is completely contained within the cylinder. It is necessary when initially placing the end of the cutting block in the cylinder to withdraw the locking pin 19. As the block reaches its final position within the cylinder the pin will spring into the slot and thereby fasten the block against end movement. One can then set the block by applying a tool to the lugs and turning the block until the pin passes into one or other of the sockets. This will prevent further rotation of the block

and will also assure that one of the cutting faces "*a*", "*b*", "*c*" or "*d*" is exposed through the face of the cylinder 1.

It is here explained that in actual practice the cylinders 1 and 3 are rotated in such a manner that the knife 5 cuts the paper 21 passed between the cylinders on one of the cutting blocks.

If one of the cutting faces "*a*", "*b*", "*c*" or "*d*" becomes worn through continued use it is not necessary to remove the cutting block from the cylinder. A new face can be presented by withdrawing the pin and turning the block by a tool applied on the lugs until the pin reseats in another socket. After all the cutting faces have been worn sufficiently to render the cutting strip useless the said strip can be readilv removed by releasing the pin 19 from the socket and groove and withdrawing the casing entirely from the cylinder. This can readily be effected by passing a hook into the holes 16 supplied in the lugs.

By the construction herein explained we provide a device which allows a new cutting surface to be readily presented by the simple turning of the block and also allows of the easy removal of the cutting strip when it is worn out.

What we claim as our invention is;

1. A cutting block for folding cylinders comprising a sectional cylindrical casing having suitable longitudinally disposed slots therein and a cutting strip contained within the casing and having portions thereof extending into and filling the slots, as and for the purpose specified.

2. A cylindrical cutting block for folding cylinders comprising a pair of similar sections hinged together at one end and provided with longitudinally extending slots and a removable cutting strip contained within the block and provided with extending portions designed to fit into and fill the slots, as and for the purpose specified.

3. The combination with a folding cylinder having a longitudinal groove formed in the face thereof, of a cutting block slidably received within the groove, a cutting strip contained in the block and having portions thereof exposed through suitable slots formed in the block and means effecting the locking of the block against movement, as and for the purpose specified.

4. The combination with a folding cylinder having a segmental groove formed in the face thereof and extending longitudinally thereof, of a sectional cutting block rotatably and slidably received within the groove and provided with a plurality of longitudinally disposed slots, a cutting strip contained within the block and having portions thereof extending into and filling the slots and means carried by the cylinder and engaging with the block effecting the locking of the block against end movement and against rotation, as and for the purpose specified.

5. The combination with a folding cylinder having a segmental groove extending longitudinally in the face thereof, of a cylindrical cutting block formed from two similar hinged sections designed to pass rotatably and slidably within the groove, each section being slotted longitudinally, a cutting strip mounted within the block and having portions thereof extending into the slots and exposed through the face of the block and releasable means carried by the cylinder and engaging with the block effecting the locking of the block against rotation and against end movement, as and for the purpose specified.

6. The combination with a folding cylinder having a segmental longitudinal groove formed therein of a cylindrical cutting block rotatably and slidably received by said groove, a cutting strip carried by said block and means for locking said block against movement.

Signed at Winnipeg this 30 day of December 1913.

ALLAN CONNELL SAMSON.
RICHARD JOSEPH PRENDERGAST.

In the presence of—
GERALD S. ROXBURGH,
ROLAND FOSTER.

Copies of this patent may be obtained for five cents each, by addressing the "Commissioner of Patents, Washington, D. C."