May 22, 1962 J. F. HALBEISEN 3,035,421

AIR OUTLET CONTROL FOR AN AIR CONDITIONER

Filed March 6, 1961 2 Sheets-Sheet 1

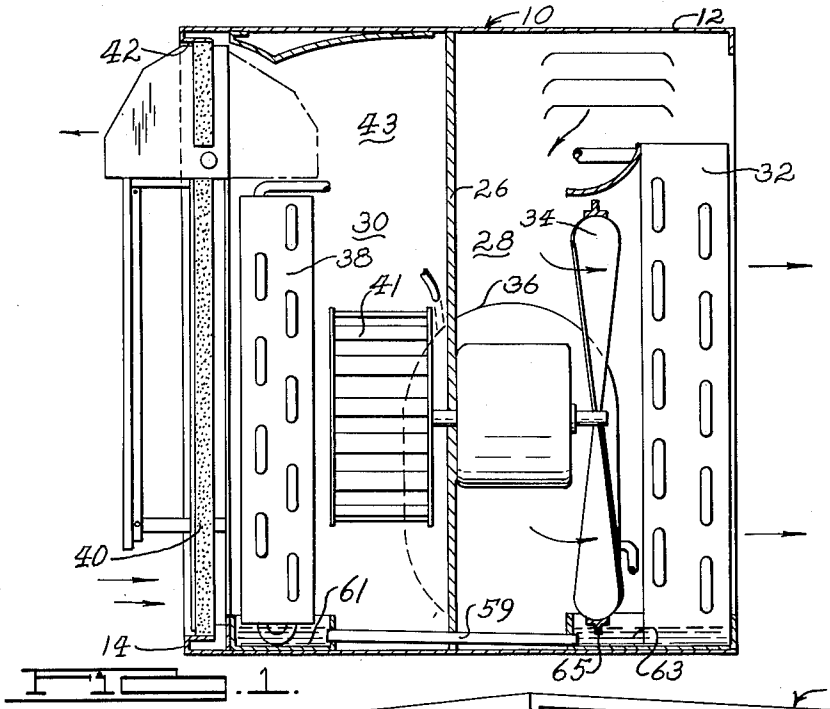

FIG. 1.

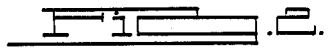

FIG. 2.

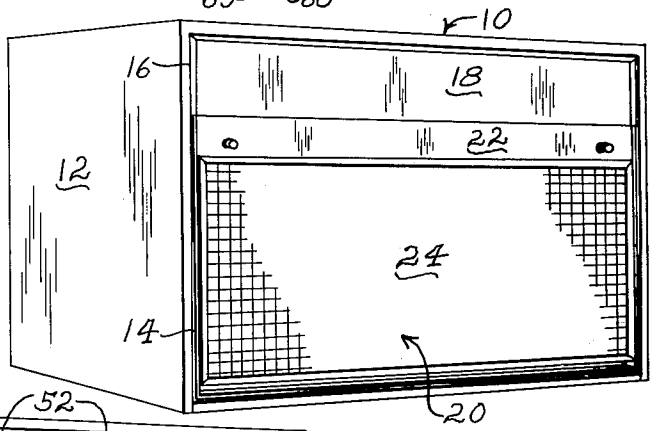

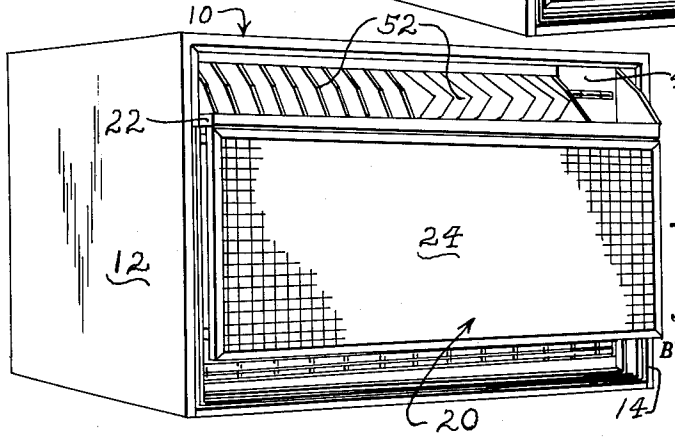

FIG. 3.

INVENTOR.
John F. Halbeisen
BY
Harness and Harris
ATTORNEYS.

May 22, 1962 J. F. HALBEISEN 3,035,421

AIR OUTLET CONTROL FOR AN AIR CONDITIONER

Filed March 6, 1961 2 Sheets-Sheet 2

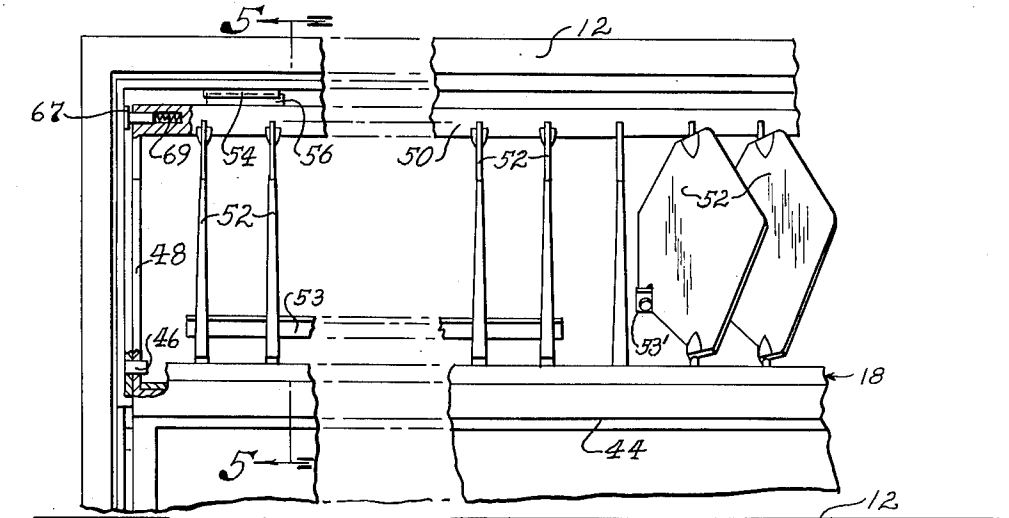

FIG. 4.

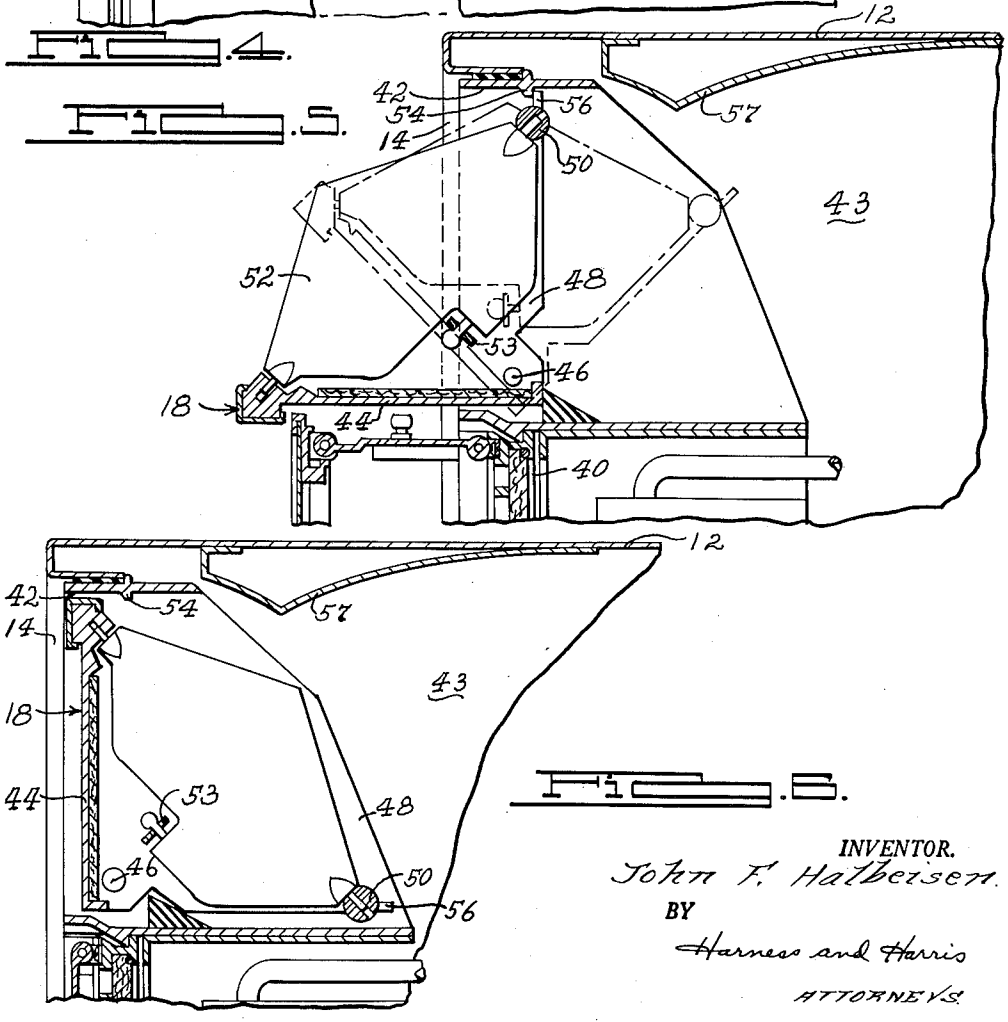

FIG. 5.

INVENTOR.
John F. Halbeisen
BY
Harness and Harris
ATTORNEYS

United States Patent Office 3,035,421 Patented May 22, 1962

3,035,421

AIR OUTLET CONTROL FOR AN AIR CONDITIONER

John F. Halbeisen, Dayton, Ohio, assignor to Chrysler Corporation, Highland Park, Mich., a corporation of Delaware

Filed Mar. 6, 1961, Ser. No. 93,385
7 Claims. (Cl. 62—426)

The present invention relates to an air outlet grille particularly adapted for use on room air conditioners.

Room air conditioners generally present a front face to the room and it is common practice to provide means for the admission of room air through one opening in such front face and to provide another opening therein to accommodate the discharge of conditioned air to the room. It is a principal object of this invention to provide a novel air outlet control for the above-mentioned air outlet opening and to incorporate in this control mechanism for closing such opening when the air conditioner is inoperative and the leakage of cold outside air to the room is undesirable.

It is also an object of this invention to provide mechanism capable of selectively closing the air outlet opening, opening it and influencing the direction of air discharge therefrom with such mechanism presenting a minimum of restriction to the passage of air through such opening.

It is a further object of this invention to provide a control mechanism that protrudes beyond the front face of the room air conditioner to act as a baffle to minimize short circuiting of discharged air directly back to the air inlet.

It is an additional object of the invention to provide a baffle in the plenum of an air conditioner to direct air toward a pivoted outlet control mechanism to increase the effectiveness of such mechanism on the directional control on such air.

It is also an object of this invention to pivot the control mechanism along one edge of the air outlet opening and along one edge of the mechanism so that when the latter is in its open position a minimum of obstruction to the passage of air is offered by such mechanism.

Referring to the drawings:

FIG. 1 is a vertical sectional view of an air conditioner incorporating my air outlet control;

FIG. 2 is a perspective view of a room air conditioner having the control associated with its air outlet opening shown in its closed position;

FIG. 3 is a perspective view of a room air conditioner having the above-mentioned control in an open condition;

FIG. 4 is a fragmentary front elevational view of the air conditioner air outlet control;

FIG. 5 is a sectional view taken on the line 5—5 of FIG. 4 and showing the air outlet control in its fully open position with an intermediate position shown in broken lines; and

FIG. 6 is a sectional view similar to FIG. 5 except that the air outlet control is shown in its closed position.

A room air conditioner is illustrated generally by the numeral 10 and it includes a casing 12 provided with a front wall 14 which is intended to be located in the enclosure after the installation of the air conditioner is complete. The front face 14 of the air conditioner is provided with an upper rectangular panel 16 in which an air outlet control is pivotally mounted. The front wall is also provided with a lower rectangular area 20 which serves as an air inlet opening. Cooperating panels 22 and 24 are illustrated as associated with the air inlet opening area 20 and are the subject matter of a separate U.S. patent application Serial No. 93,386, filed March 6, 1961 by John F. Halbeisen.

Referring to FIG. 1 of the drawings it will be seen that the internal mechanism of the air conditioner is of conventional construction and includes a dividing wall 26 which divides the interior into a compressor-condenser compartment 28 and an evaporator compartment 30. A condenser 32 is mounted in the condenser compartment and a fan 34 is provided for the circulation of outside air over the condenser for the dissipation of heat therefrom. A compressor 36 is connected to the condenser and to an evaporator 38 with the latter located in compartment 30. The casing 12 and its front face 14 are provided with an air inlet opening 40 and an air outlet opening 42. A blower 41 is provided to draw air in through the inlet opening 40 and discharge it into a plenum 43 located in the upper portion of evaporator compartment 30. The plenum 43 is in fluid flow communication with the air outlet opening 42 and it is pressurized by the action of blower 41.

The control to be described herein is mounted over the air outlet opening 42 and includes a door 44 which is pivotally mounted at 46 in casing 12 for movement between a closed position illustrated in FIG. 2 and in open position illustrated in FIGS. 3, 4 and 5. The plate 44 also serves to cover a small control panel 45 on the front face of the air conditioner. A pair of end brackets 48 are carried by plate 44 and a transverse member 50 extends between end brackets 48. The plate 44, end brackets 48 and transverse member 50 form a unitary assembly mounted for pivotal movement on the axis defined by the pivots 46 between an open position illustrated in solid lines in FIG. 5, an infinite number of intermediate positions diagrammatically illustrated by broken lines in FIG. 5 and a closed position illustrated in FIG. 6. The plate 44 and its associated components project forwardly of the front wall of the air conditioner when the latter are in their open position as illustrated in FIG. 5 to shield the air inlet opening 20 and minimize short circuiting of conditioned air to the inlet opening.

A plurality of vanes 52 are pivotally mounted in the plate 44 and transverse member 50 to afford lateral control of the outgoing air. The vanes 52 are interconnected for gang movement by a strap 53 illustrated in FIGS. 4, 5 and 6. It is preferred that one group of vanes 52 be interconenected by the strap 53 while a second group of vanes 52 be interconnected by strap 53' in order that the first and second groups of vanes may assume different directions as illustrated in FIG. 3. Cooperating stop members 54 and 56 are carried by the casing 12 and transverse member 50, respectively, to limit the outward movement of the plate 44 and its associated parts as illustrated in FIGS. 4 and 5.

Since the air in plenum 43 is under pressure when the blower 41 is operating it will tend to discharge through the opening 42 into the room. With the control mechanism in the broken line position illustrated in FIG. 5 discharging air will be deflected upwardly. However, it has been found that an appreciable amount of the air thus being discharged will tend to pass above the plate 44 when the latter is in an intermediate position as illustrated in broken lines in FIG. 5 and the directional control of such air by plate 44 would normally be lost. In order to compensate for this I have incorporated a baffle 57 which extends transversely of plenum 43 and depends from the roof thereof formed by casing 12. Baffle 57 deflects air in the upper portion of plenum 43 downwardly to insure its impingement upon the inclined surface of plate 44 when the latter is in an intermediate position as indicated in broken lines in FIG. 5. The baffle thus assures that the air will impinge upon plate 44 and be deflected upwardly thereby whenever the plate 44 is in an intermediate position. If desired, the baffle 57 may be

so proportioned that the air deflected thereby will discharge on its downward path outwardly of the outer extremity of plate 44 when the latter is in its fully opened position illustrated in solid lines in FIG. 5.

During winter months when the outside temperature is low the leakage of cold air into the room is undesirable. Without some form of control this leakage tends to occur because of the presence in conventional room coolers of a condensate drainage tube 59 which extends from a condenser collector 61 located below the evaporator coil 38 to a condensate tray 63 located below the condenser 32. Such tubes or troughs are employed by most air conditioners for the ultimate disposal of the condensate on to the condenser coil by means of an operating mechanism such as a slinger ring 65 carried by fan 34. Many conventional air conditioners have other points of air leakage through partition 26, but condensate drainage tube 59 is mentioned as one of the more flagrant sources of such leakage. The air outlet control mechanism described herein is very desirable for it permits one to close plate 44 as illustrated in FIG. 6 and thereby prevent the admission of such cold air to the room during periods in which the air conditioner is inoperative. As mentioned above other mechanism may be used for closing the air inlet opening and one such mechanism is covered by a U.S. patent application Serial No. 93,386, filed March 6, 1961 by John F. Halbeisen and entitled "Room Air Conditioner."

It should also be noted that with the air outlet control mechanism in its fully opened position there is a single transverse plate 44 extending laterally of the opening. Most other air outlet controls of which I am aware have at least two transverse plates thereby increasing the resistance to air flow.

The location of the pivots described above for the plate 44 permit the plate 44 in its open position to protrude forwardly from the front face of the air conditioner to thereby serve a dual purpose as a directional control and a baffle to separate the air outlet opening from an air inlet opening and to prevent the short circuiting of air directly back into the air inlet opening.

The location of the pivot at the lower edge of the air outlet opening and along the trailing edge of the plate 44 permits a maximum unobstructed opening to be obtained when the plate 44 is in its fully open position.

A friction element 67 is carried by transverse member 50 and urged by spring 69 into frictional engagement with a side wall of casing 12 to thereby retain the outlet control mechanism in its selected position. An additional friction element 67 (not illustrated) may be carried on the other end of transverse member 50, if desired.

I claim:

1. A unit for conditioning air within an enclosure comprising a housing having a front wall exposed to such air, refrigeration mechanism including a cooling element within said housing and air propelling means for inducing a flow of air over said cooling element, said front wall being substantially vertical and provided with an air inlet opening and an air outlet opening, and control apparatus for the above-mentioned air outlet opening, said control apparatus comprising a door pivotally mounted in said housing on an axis substantially in the plane of said front wall and transverse of the air outlet opening for movement between a closed position in the plane of said front wall in registry with the air outlet opening to an open position in which substantially all of said door projects forwardly from said front wall, said control apparatus further including a plurality of vanes carried by said door and extending across the air outlet opening in a direction substantially normal to said door.

2. A unit for conditioning air within an enclosure comprising a housing having a front wall exposed to such air, refrigeration mechanism including a cooling element within said housing and air propelling means for inducing a flow of air over said cooling element, said front wall being substantially vertical and provided with an air inlet opening and an air outlet opening, and control apparatus for the above-mentioned air outlet opening, said control apparatus comprising a door pivotally mounted in said housing on an axis substantially in the plane of said front wall and transverse of the air outlet opening for movement between a closed position in the plane of said front wall in registry with the air outlet opening to an open position in which substantially all of said door projects forwardly from said front wall, said control apparatus further including a plurality of vanes carried by said door and pivotally mounted thereon for movement laterally relative to the above mentioned air outlet opening when the door is in its open position to thereby control the lateral direction of air discharge.

3. A unit for conditioning air within an enclosure comprising a housing having a front wall exposed to such air, refrigeration mechanism including a cooling element within said housing and air propelling means for inducing a flow of air over said cooling element, said front wall being provided with an air inlet opening and an air outlet opening, and control apparatus for the above-mentioned air outlet opening, said control apparatus comprising a single door traversing the above-mentioned air outlet opening in a first direction with said door pivotally mounted in said housing for movement between a closed position in the plane of said front wall to an open position, said control apparatus further including a plurality of vanes carried by the inner surface of said door and traversing the air outlet opening in a second direction whereby the vanes are concealed when the door is in its closed position and the vanes are operative to control in one direction the air discharged through the air outlet opening when the door is in its open position.

4. A unit for conditioning air within an enclosure comprising a housing having a front wall exposed to such air, refrigeration mechanism including a cooling element within said housing and air propelling means for inducing a flow of air over said cooling element, said front wall being provided with an air inlet opening and an air outlet opening, said inlet opening bordering one edge of the air outlet opening, and control apparatus for the above-mentioned air outlet opening, said control apparatus comprising a door pivotally mounted in said housing on an axis substantially in the plane of said front wall and along the above-mentioned bordering edge of the air outlet opening, said axis further being located along the lower edge of said door for movement of the latter between a closed position in the plane of said front wall to an open position in which substantially all of said door projects forwardly from said front wall in the vicinity of the above-mentioned bordering edge and serves as a baffle to separate the above-mentioned air outlet opening from the air inlet opening to discourage the travel of air directly from the air outlet opening to the air inlet opening.

5. A unit for conditioning air within an enclosure comprising a housing having a front wall exposed to such air, refrigeration mechanism including a cooling element within said housing and air propelling means for inducing a flow of air over said cooling element, said front wall being provided with an air inlet opening and an air outlet opening, said housing defining a plenum located behind the above mentioned air outlet opening, and control apparatus for the above-mentioned air outlet opening, said control apparatus comprising a door pivotally mounted in said housing on an axis substantially in the plane of said front wall and located along the lower edge of the above-mentioned air outlet opening for movement between a closed position in the plane of said front wall to an open position in which substantially all of said door projects forwardly from said front wall below the air outlet opening, said control apparatus further including a baffle extending across the upper portion of the above-

mentioned plenum in a direction generally parallel to said axis to deflect air downwardly toward said door.

6. An air outlet control for an air conditioner having a housing defining a plenum and provided with a front wall having an air outlet opening in fluid flow communication with the plenum, said control including a single door pivotally mounted on said housing on a horizontal axis extending transversely of the opening along a lower edge of said door for movement of said door between a position in which said door closes the air outlet opening and restricts leakage of air from the plenum through the opening to selective positions in which said door projects in its entirety forwardly of said wall and is inclined relative to said wall to deflect air discharged from said plenum in an upward direction, said control further including a baffle extending transversely of said housing across the top of the plenum behind said front wall to deflect air emerging from said plenum downwardly toward said door for subsequent directional control thereof by said door.

7. A unit for conditioning air within an enclosure comprising a housing having a front wall exposed to such air, refrigeration mechanism including a cooling element within said housing and air propelling means for inducing a flow of air over said cooling element, said front wall being provided with an air inlet opening and an air outlet opening, said housing defining a plenum located behind the above mentioned air outlet opening and control apparatus for the above-mentioned air outlet opening, said control apparatus comprising a door pivotally mounted in said housing on an axis substantially in the plane of said front wall and located along the lower edge of the above-mentioned air outlet opening for movement between a closed position in the plane of said front wall to an open position in which substantially all of said door projects forwardly from said front wall below the air outlet opening, said control apparatus further including a baffle extending across the upper portion of the above-mentioned plenum in a direction generally parallel to said axis to deflect air downwardly on a path that passes outboard of the leading edge of said door when the latter is in its aforementioned open position with the above-mentioned path intersecting some positions of said door intermediate its open and closed positions to effect an upward deflection of such air when the door is in an intermediate position.

References Cited in the file of this patent

UNITED STATES PATENTS

952,505	Brynteson	Mar. 22, 1910
2,282,015	Williams	May 5, 1942
2,730,873	Hardin	Jan. 17, 1956
2,942,439	Wuesthoff	June 28, 1960