US00D522993S

(12) United States Design Patent

Harris, Jr. et al.

(10) Patent No.: US D522,993 S
(45) Date of Patent: ** Jun. 13, 2006

(54) **COMPACT DISK PLAYER**

(75) Inventors: **Kenneth David Harris, Jr.**, Hollis, NH (US); **James C. TerMeer**, Concord, NH (US); **Timothy L. Trzepacz**, Auburn, NH (US)

(73) Assignee: **Brookstore Purchasing, Inc.**, Merrimack, NH (US)

(**) Term: **14 Years**

(21) Appl. No.: **29/207,340**

(22) Filed: **Jun. 11, 2004**

(51) **LOC (8) Cl.** **14-01**
(52) **U.S. Cl.** **D14/156**; D14/195
(58) **Field of Classification Search** D14/135–136, D14/156–157, 160–165, 167–168, 192–198, D14/188, 258, 445; 360/99.02, 99.07; 369/75.11, 369/75.21, 77.21, 77.11; 720/612, 619, 647, 720/655; 455/344, 347–351
See application file for complete search history.

(56) **References Cited**

U.S. PATENT DOCUMENTS

D240,655 S * 7/1976 Imai D14/195
D244,228 S * 5/1977 Kawano et al. D14/195
D264,461 S * 5/1982 Hoshino et al. D14/163
D292,800 S * 11/1987 Davidson D14/195
D383,755 S * 9/1997 Muller et al. D14/171
D474,170 S * 5/2003 Hasegawa et al. D14/168

* cited by examiner

Primary Examiner—Nanda Bondade
(74) *Attorney, Agent, or Firm*—Nixon Peabody, LLP

(57) **CLAIM**

The ornamental design of a compact disk player, as shown and described.

DESCRIPTION

FIG. **1** is a front perspective view showing a new compact disk player;
FIG. **2** is a back perspective view thereof;
FIG. **3** is a front view thereof;
FIG. **4** is a back view thereof;
FIG. **5** is a top view thereof;
FIG. **6** is a bottom view thereof;
FIG. **7** is a left side view thereof; and,
FIG. **8** is a right side view thereof.

1 Claim, 8 Drawing Sheets

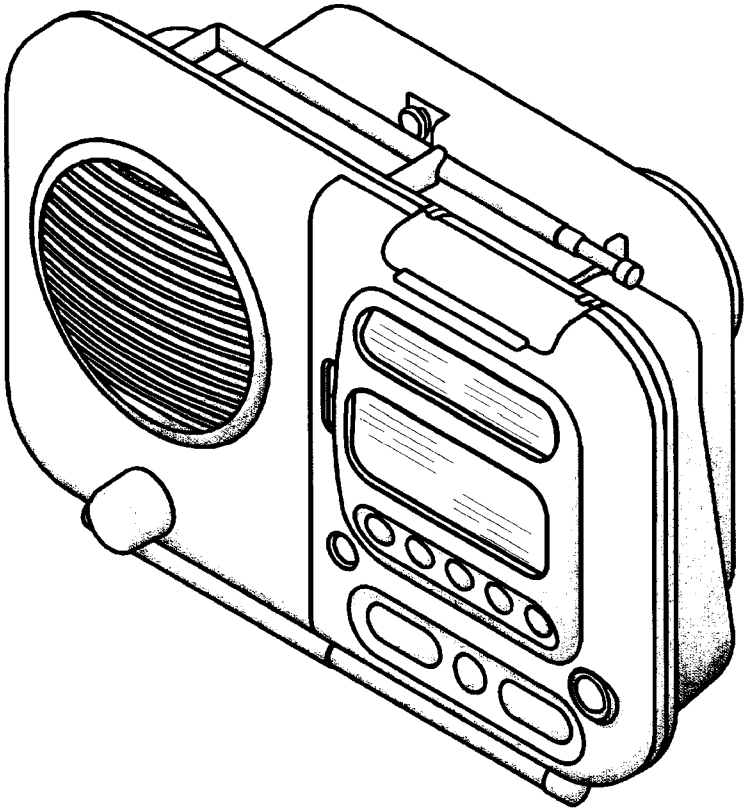

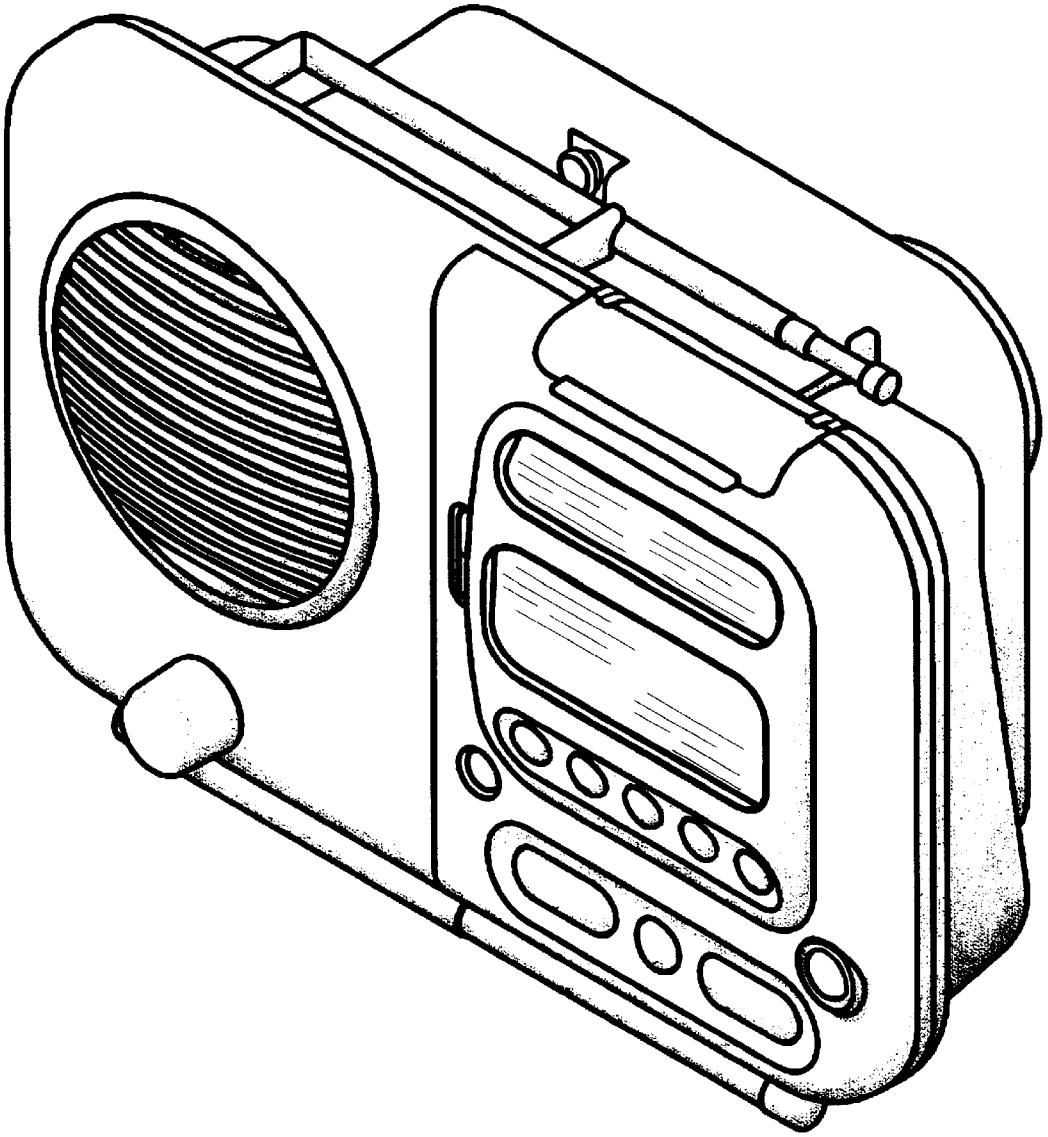

FIG. 1

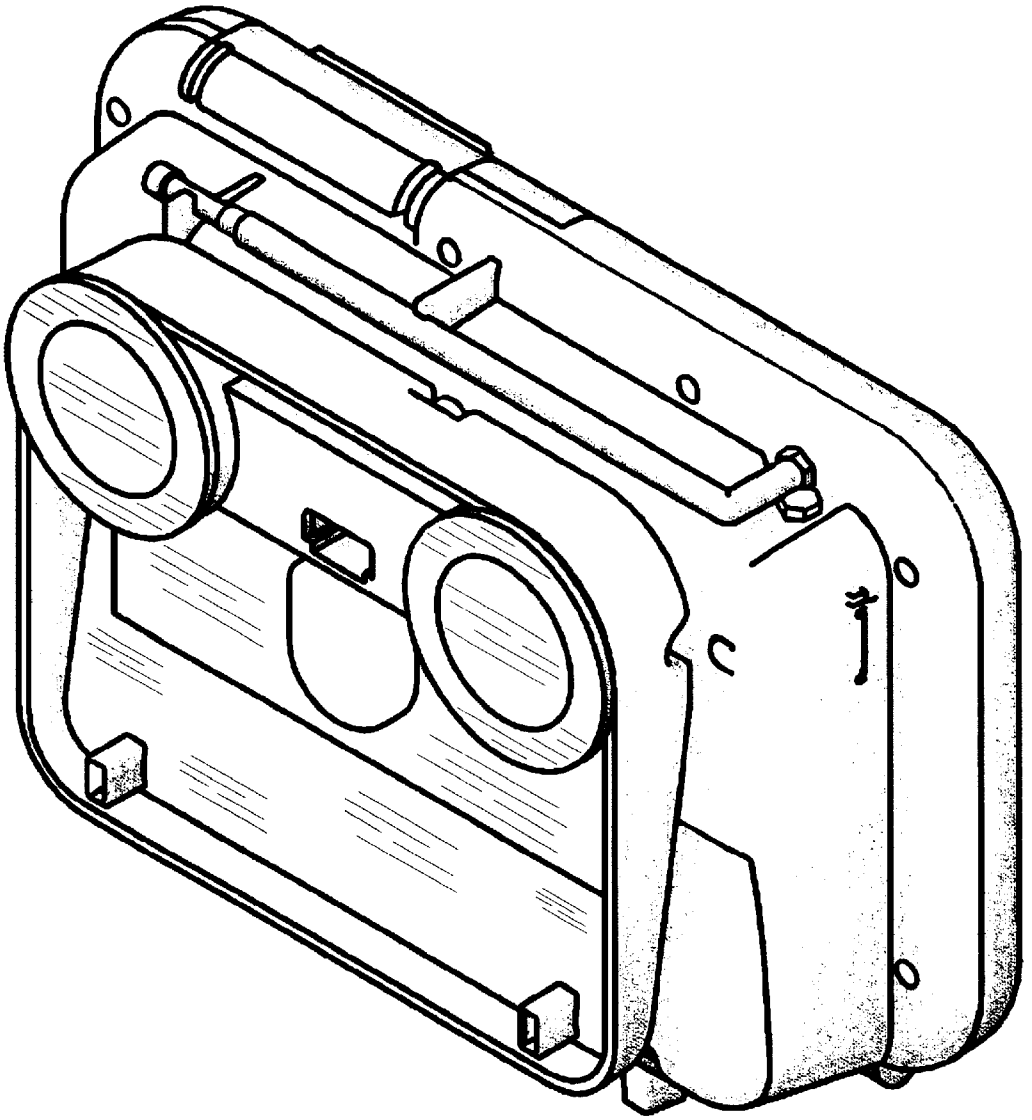

FIG. 2

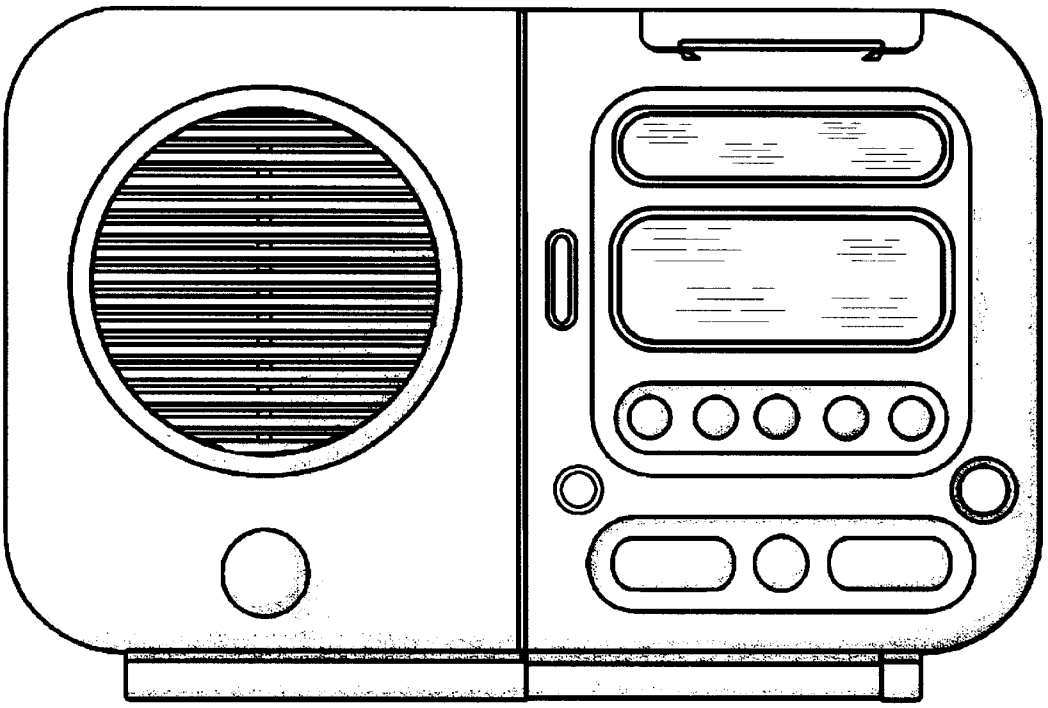

FIG. 3

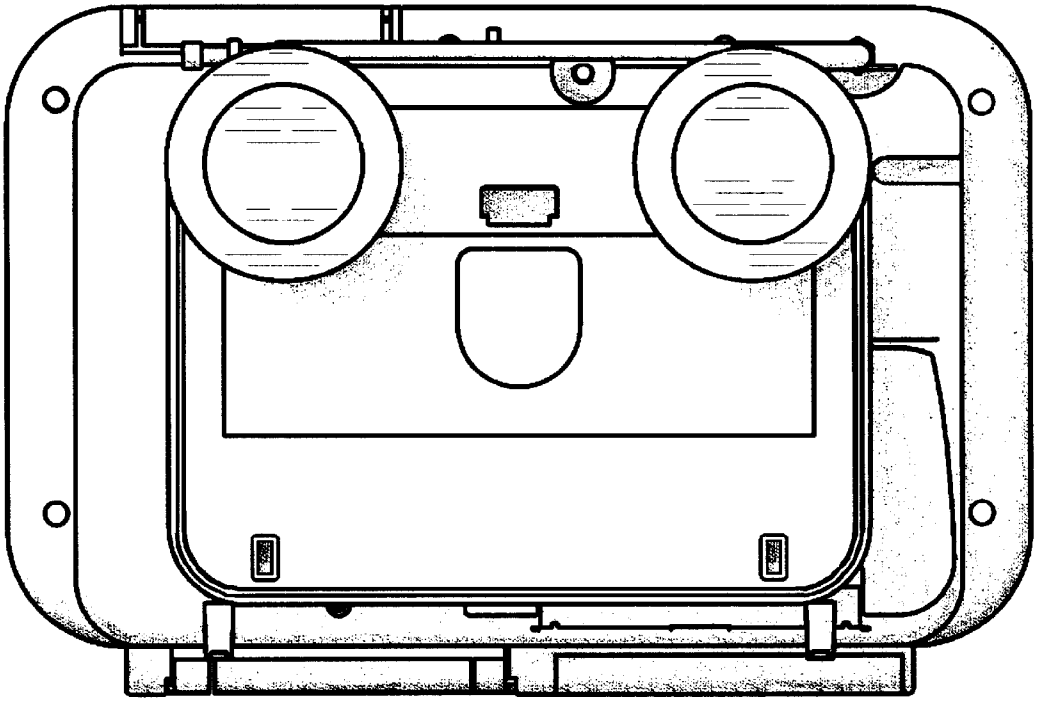

FIG. 4

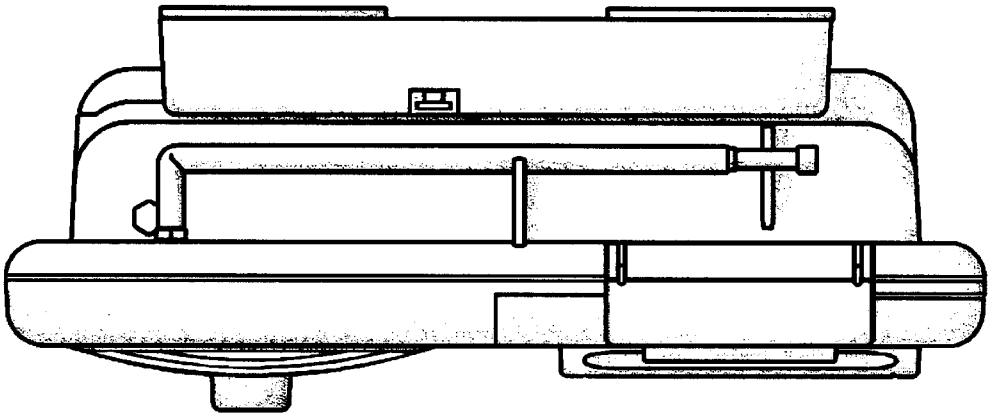

FIG. 5

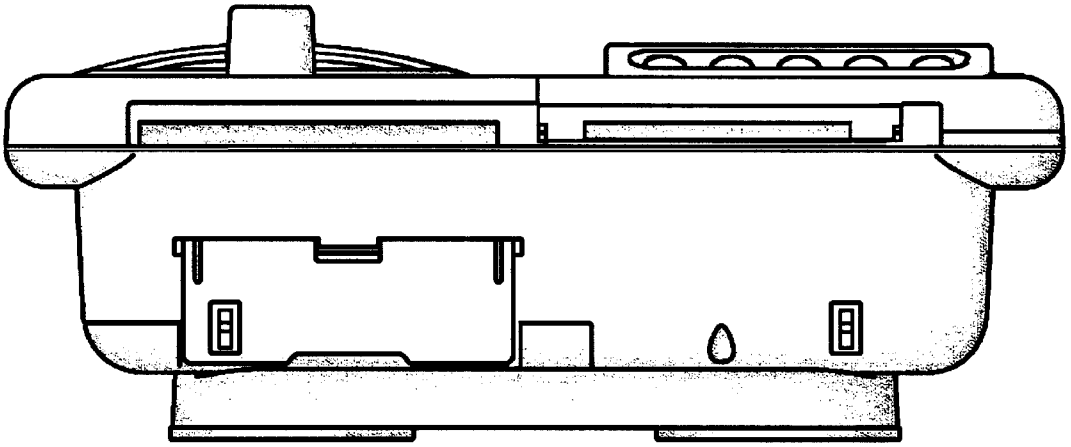

FIG. 6

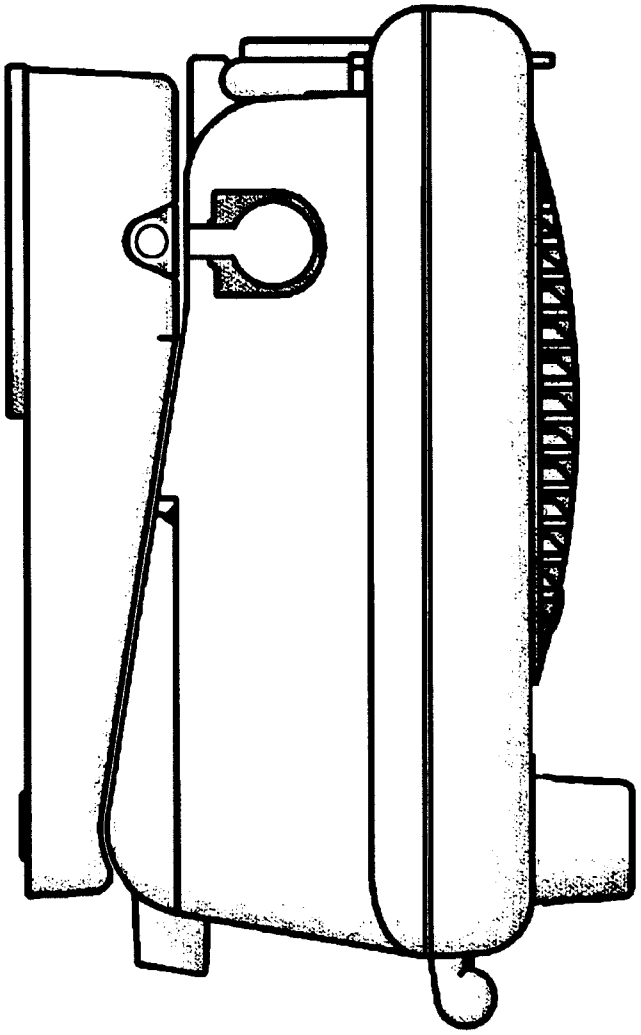

FIG. 7

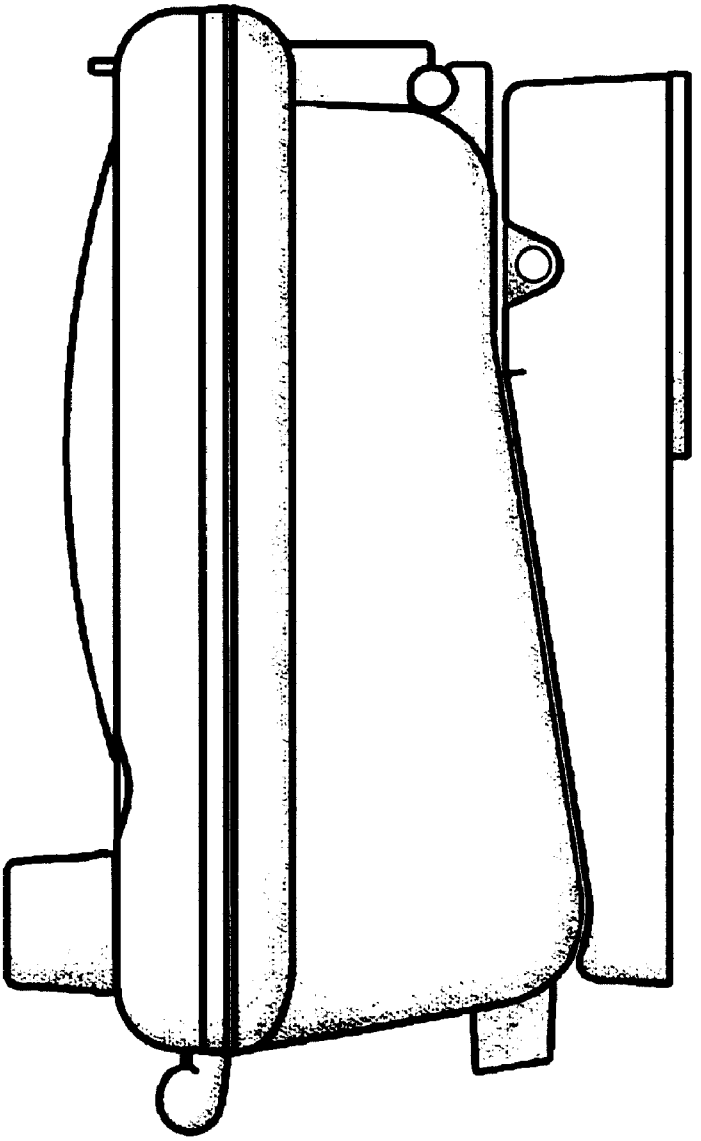

FIG. 8

UNITED STATES PATENT AND TRADEMARK OFFICE

CERTIFICATE OF CORRECTION

PATENT NO. : Des. 522,993 S
APPLICATION NO. : 29/207340
DATED : June 13, 2006
INVENTOR(S) : Kenneth David Harris, Jr., James D. TerMeer and Timothy L. Trzepacz

It is certified that error appears in the above-identified patent and that said Letters Patent is hereby corrected as shown below:

Title Page:

Item [73], Assignee, delete "Brookstore," and substitute -- Brookstone -- in its place.

Signed and Sealed this

Twelfth Day of December, 2006

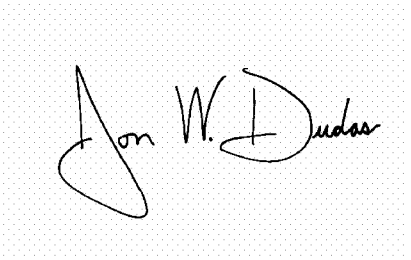

JON W. DUDAS
Director of the United States Patent and Trademark Office