Nov. 10, 1931. J. A. TOPPING 1,831,374

METHOD OF MAKING STRIP SHINGLES

Filed June 27, 1927 2 Sheets-Sheet 1

Fig. 1

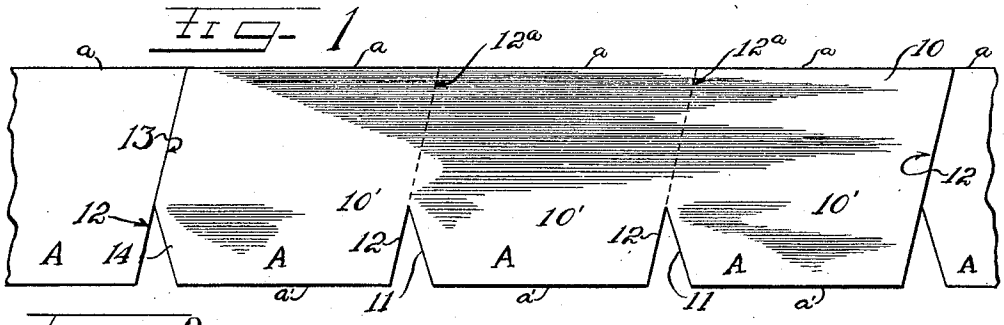

Fig. 2

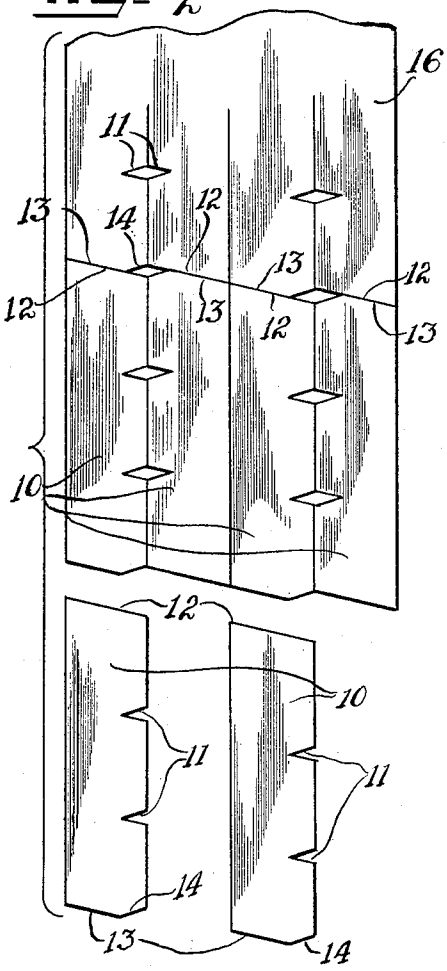

Fig. 5.

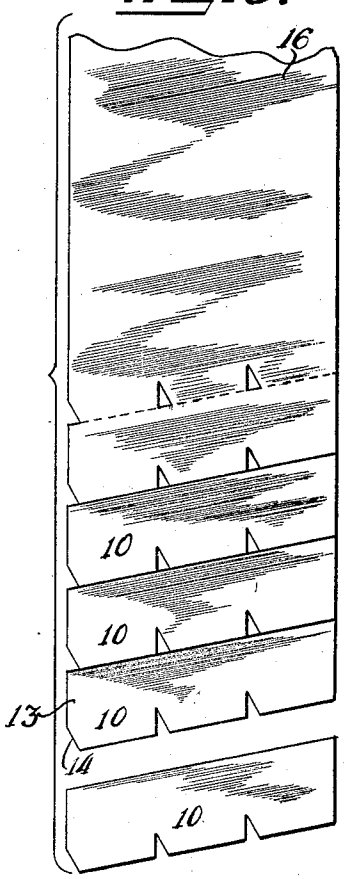

Inventor
John A. Topping
by Charles W. Hills
Attys

Nov. 10, 1931. J. A. TOPPING 1,831,374

METHOD OF MAKING STRIP SHINGLES

Filed June 27, 1927 2 Sheets-Sheet 2

Fig. 6.

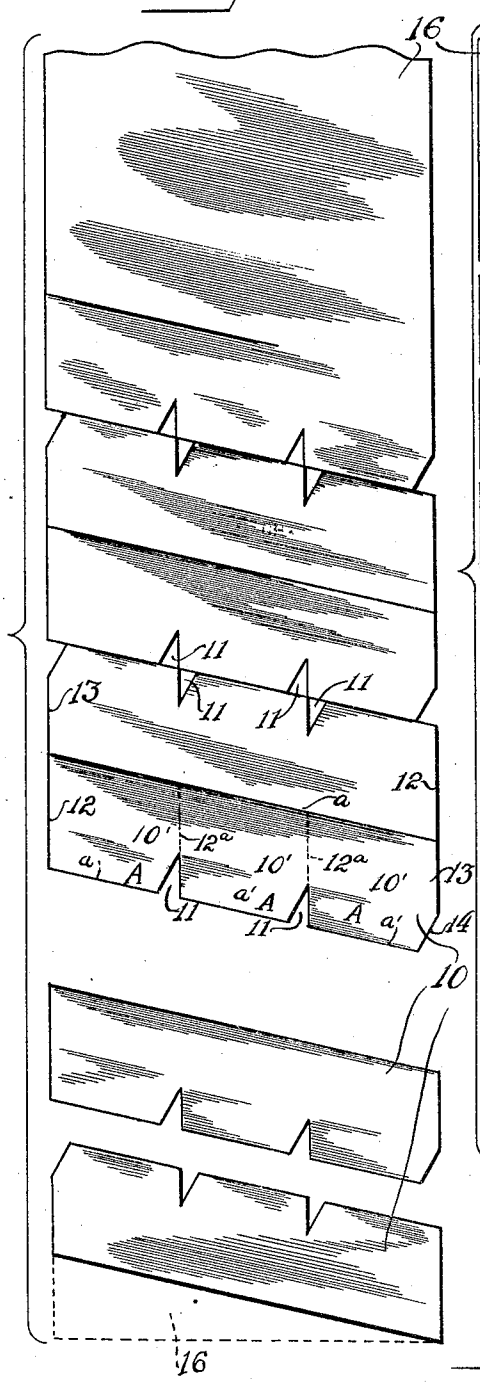

Fig. 3.

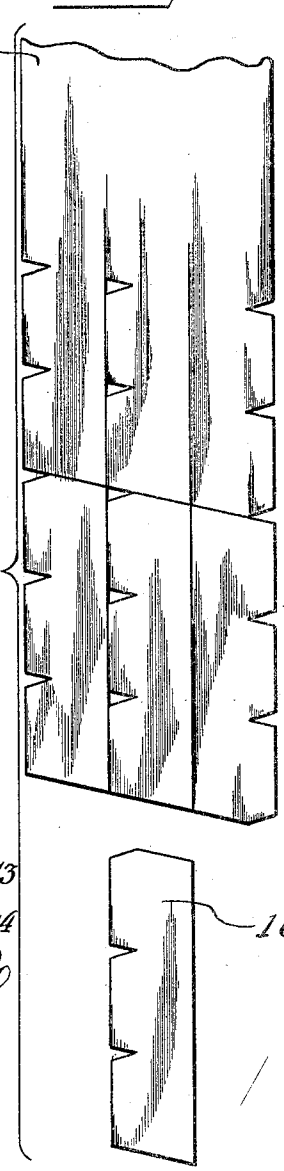

Fig. 4.

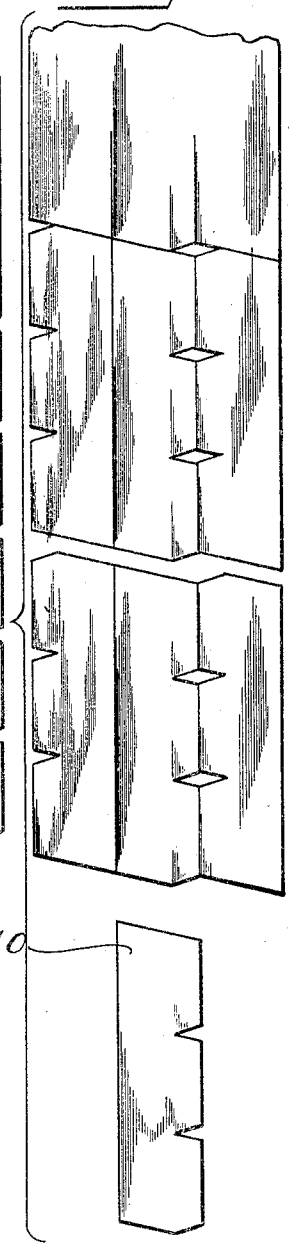

Inventor
John A Topping
by Charles Hills Attys

Patented Nov. 10, 1931 1,831,374

UNITED STATES PATENT OFFICE

JOHN A. TOPPING, OF BRONXVILLE, NEW YORK

METHOD OF MAKING STRIP SHINGLES

Application filed June 27, 1927. Serial No. 201,572.

This invention relates to improvements in the method of making shingles.

An object is to provide a shingle which may be made by a single stroke of a guillotine, knife or a single revolution of a rotary knife or roll-cutters thereby cheapening the cost of production.

A further object is to fashion the shingle or strip so that it may be cut from a progressively moving sheet of suitable material complete in all of its parts, and ready for immediate use, by a single operation and with a minimum loss of said material as waste.

A further object is to provide a shingle having its exposed or butt end in the shape of a truncated cone provided by tapering wedge-shape notches and in which a shingle unit has an edge at one end which provides one side or boundary of one notch and an edge at the other end which provides the other side or boundary of another notch by the said edges flaring in opposite directions, one to the right and the other to the left.

Other objects, advantages and benefits of the invention will become apparent from a consideration of the following description in conjunction with the accompanying drawings forming a part hereof, wherein

Figure 1 is a plan view of my improved multiple shingle, and showing the outlines of the shingle units by dotted lines.

Figure 2 illustrates one method of cutting shingles, a plurality at one time from a sheet, the shingles being cut lengthwise from the sheet.

Figures 3 and 4 illustrate two plans of cutting shingles, three at one time, from a sheet, the shingles being cut lengthwise from the sheet.

Figures 5 and 6 illustrate two plans of cutting shingles, one at a time, from a sheet, the shingles being cut transversely from the sheet and obliquely to the side edges.

Rolled roofing felt consists of a fibrous base impregnated and coated with asphaltic material to make it waterproof and then usually finished with a layer of crushed stone or slate on one side.

The simplest and least expensive method for using composition roofing is to apply it in elongated sheets the length of the roof and the full width of the sheet as manufactured. This does not, however, present the desired ornamental appearance. Relatively small individual roofing units, such as slates, tiles or shingles produce the more pleasing effects. These small individual roofing units require much more time and trouble to manufacture and additional expense and skill to install. A compromise is arrived at by using multiple shingle strips which are long strips of roofing felt divided along their lower edge into a series of portions or sections of substantially equal length and contour, each unit presenting the appearance of a separate shingle, although in reality they are integrally united to a number of other similar portions. Roofing material especially when slate or gravel covered is hard to cut, and this act is very destructive to the cutting knives or shearing edges employed. For this reason, the length of felt to be cut for each shingle should be reduced to a minimum.

In Figure 1, my improved shingle strip 10 is shown to consist of three united shingles 10′. The dotted lines 12*a* show a continuation of the oblique line 12, and when cuts are made along lines 12*a* and 12*a*, the strip 10 may be divided into three perfect shingles 10′.

The boundary of the strip 10 is indicated by line or edge *a* at the top and *a′* at the bottom horizontal edge, and the oblique line or edge 12 at one end and the oblique line or edge 13 at the other end. The edges *a*—*a′* are parallel, as also are edges 12 and 13. These lines or edges form a geometric figure known as an oblique parallelogram or rhomboid. This is also true of the individual shingles 10′.

The acute angular end or lower corner of the unit is cut away as at 14, to form a wedge shape slot 11 with the line or edge 12 of the adjacent shingle.

The edges *a* and 13 and the edges *a′* and 12 form obtuse angles, respectively, and the edges *a* and 12 and *a′* and 13, (before the part forming the wedge-shape notch 11 is cut away) form acute angles, respectively.

It will be observed that the edge 14 bears

the same angular relation to edge a' as the edge 12 bears to a', except that it flares in opposite directions, these two edges being the side boundary for the wedge-shape slot 11 which is formed by the proximate edges of two adjacent ends of separated shingles or strips.

This formation produces a tapered exposed butt A of each shingle-like unit 10'. If the strip 10 be cut along the dotted lines 12a, there would be produced thereby, as shown, three perfect shingles 10' without further procedure, and each shingle would be an oblique parallelogram or rhomboid.

The strip 10 has a plurality of uniformly spaced inwardly extending wedge-shaped notches 11 in its bottom edge a' to produce a plurality of apparently separated shingles 10'.

In Figure 7, the square end of the elongated sheet 16 from which the shingle units may be cut, is shown by dotted lines which indicates the oblique position of the strips with respect to the sheet. It shows also that lines 12 and 13 were formerly the side edges of the sheet.

Figures 5 and 6 show the adaptability of a guillotine knife for shearing the strip by a single stroke, this being especially true with respect to Figure 5.

The shingle strips, or the individual shingles, may be laid on a deck so that the notches 11 of the superposed course may be located anywhere in vertical lines taken through similar notches of the subjacent course, to produce varied effects and roofs of different configurations.

It is of course advisable for line or edge a' of a superposed course to be located above the apex of the wedge-shape notches of the underlying course.

The oblique joint produced by oblique edges 12 and 13 produces a better and longer rain-resisting path than when said path is at right angles to the longitudinal edges of the course.

Having described my invention, what I claim is:—

The method of making roofing elements, each having an outline in the form of an oblique parallelogram or rhomboid having one continuous longitudinal edge, the opposite longitudinal edge having a plurality of pointed wedge-shaped notches therein, and having a part of its lower acute angular end cut away on a single straight line to provide the same obtuse angular relation with the bottom edge as that which obtains at the corresponding edge of the notches of the shingle, which consists in cutting pointed wedge-shaped notches in a web of prepared material at regular intervals in the longitudinal edges thereof, and in cutting the material obliquely across the web at regular intervals in single straight lines running through alined sides of the wedge-shaped notches on opposite longitudinal edges of the web.

In testimony whereof I have hereunto subscribed my name.

JOHN A. TOPPING.