(12) UK Patent (19) GB (11) 2574511 (13) B

(45) Date of B Publication 03.05.2023

(54) Title of the Invention: A bag engaging device

(51) INT CL: ***G01M 3/36*** (2006.01)

(21) Application No: **1905791.8**

(22) Date of Filing: **25.04.2019**

(30) Priority Data:
(31) **2018901425** (32) **30.04.2018** (33) **AU**

(43) Date of A Publication **11.12.2019**

(56) Documents Cited:
EP 1344727 A2
EP 1186876 A2
DD 000273409 A1
JP 080133242 A
SU 000777572 A1
EP 1273522 A1
CN 209739535 U
DE 102005009918 A1
JP 2006038458 A
US 5507177 A2

(58) Field of Search:
As for published application 2574511 A viz:
INT CL **B65B, B65G, G01M**
Other: **WPI, EPODOC**
updated as appropriate

Additional Fields
INT CL **B65H**

(72) Inventor(s):
Brian Pearson

(73) Proprietor(s):
TNA Australia Pty Limited
(Incorporated in Australia)
24 Carter Street, Lidcombe, New South Wales 2141, Australia

(74) Agent and/or Address for Service:
J A Kemp LLP
80 Turnmill Street, London, EC1M 5QU, United Kingdom

GB 2574511 B

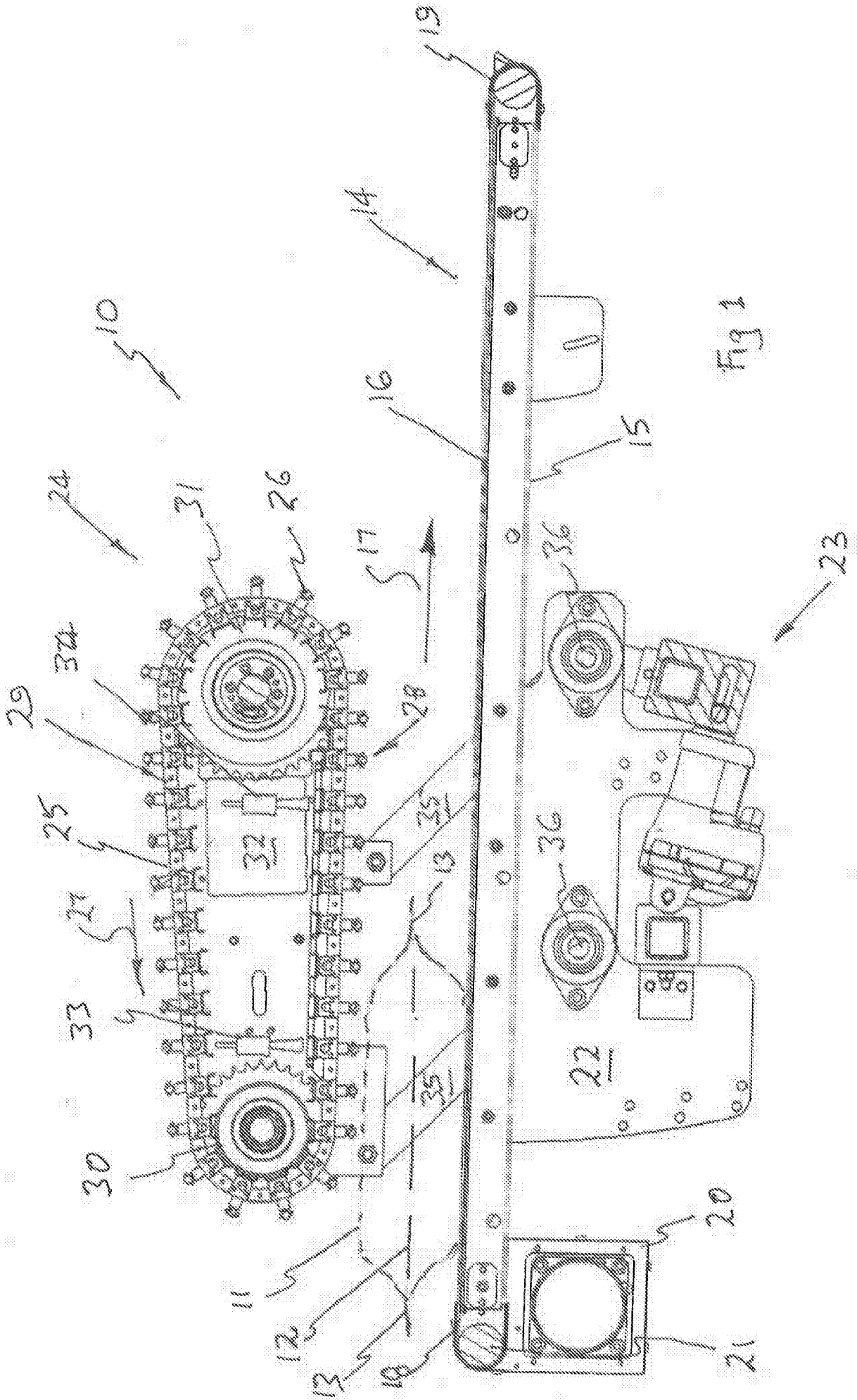
10
11
12
13
14
15
16
17
18
19
20
21
22
23
24
25
26
27
28
29
30
31
32
33
34
35
36

Fig 1

Fig 2

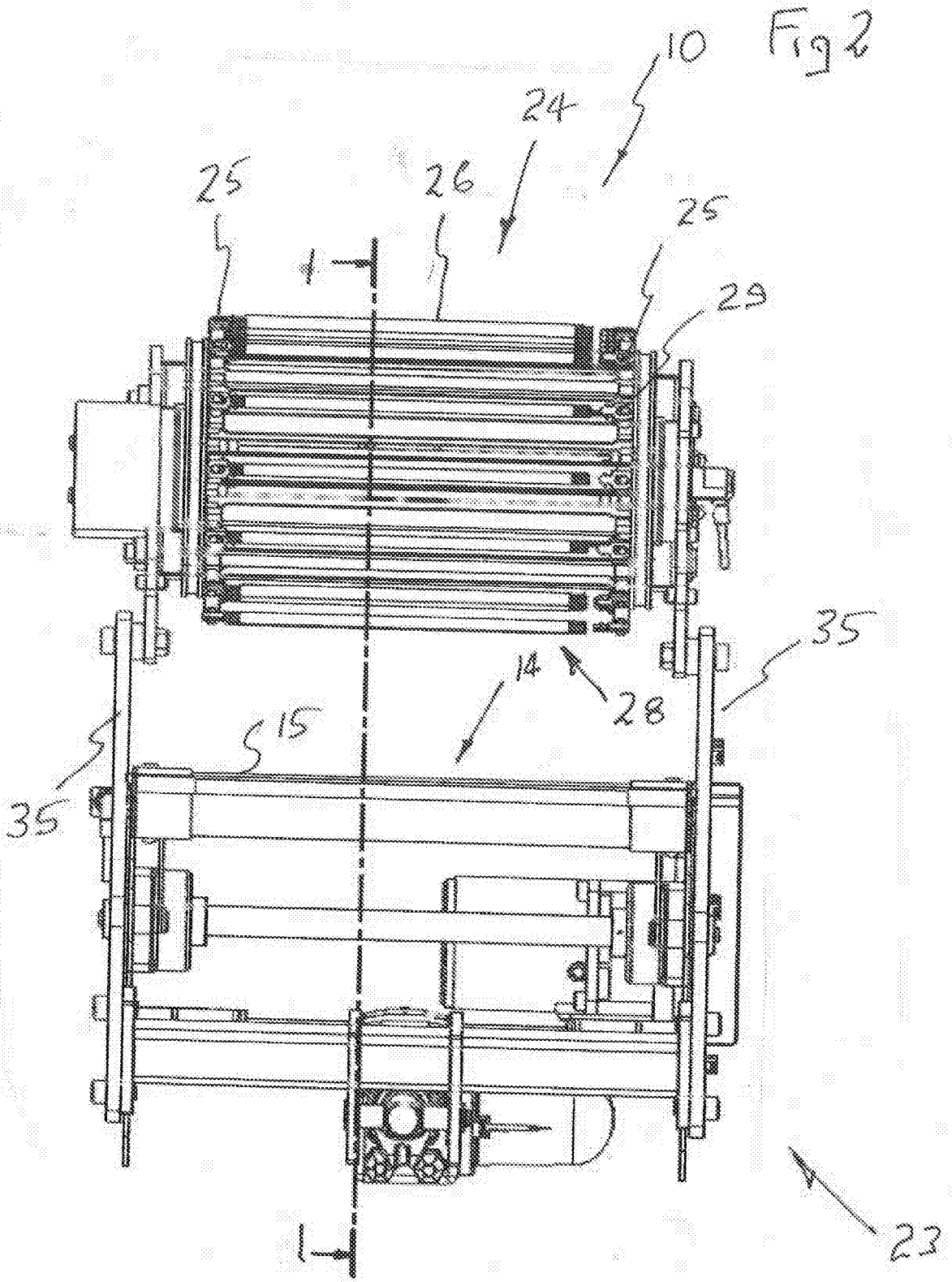

A BAG ENGAGING DEVICE

FIELD

[0001] The present invention relates to the packaging industry, and in particular but not exclusively, to the packaging industry that employs vertical fill and form packaging machines that produce cereal bags.

BACKGROUND

[0002] In the packaging industry, vertical fill and form machines are used to produce sealed bags of product. A particular example is the packaging of snack foods.

[0003] The bags are formed by the packaging machine, by the packaging machine providing the bag with a longitudinal seal and two transverse seals.

[0004] If the seals are not properly formed, the quality of the food contained in the bag degrades. As a particular example, in the manufacture of snack foods, a portion of the snacks being packaged, can be located in the seal, thereby degrading the quality of the seal.

[0005] Described in USA Patents 6202476 and 6041646, are devices that have the aim of detecting faulty bags, in particular bags that leak.

[0006] It is a disadvantage of the above discussed packaging apparatus, that faulty bags can be produced and not be detected. However, a further disadvantage is that their operation is intermittent, and therefore slow.

[0007] Further to the above, as bags are being produced by the packaging machines, they are delivered to a conveyor below. The bags may assume a variety of configurations. This has the advantage of making it difficult to arrange the bags for the purposes of being contained within larger bags or boxes.

OBJECT

[0008] It is the object of the present invention to overcome or substantially ameliorate at least one of the above disadvantages.

SUMMARY OF INVENTION

[0009] There is disclosed herein an assembly to engage closed flexible bags, the assembly including:

a base;

a conveyor mounted on the base and having an upstream end and a downstream end between which there is a moveable conveying length that provides an upwardly facing surface upon which the bags rest; and

a resilient member mounted above the conveying length and moveable in unison in said direction with said length but spaced therefrom so as to engage the bags on the conveying length;

wherein the assembly includes a compression device including said resilient member, with the compression device including at least one loop member that is moveable in unison with said conveyor, the loop member providing a mounting for said resilient member so that said resilient member is moveable in unison with said length;

said resilient member is a first resilient member, and said assembly includes further resilient members, with the resilient members being spaced along said loop member; and

each resilient member is an elongated spring extending generally horizontally, and transverse relative to said length.

09 02 23

[0014] Preferably, said loop member is a pair of chained loops, the chained loops being spaced with the springs extending therebetween.

[0016] Preferably, said assembly includes a sensor assembly operatively associated with the conveyor and resilient member, to provide a signal indicative of bag volume to thereby enable detection of bags that leak.

[0018] Preferably, said sensor assembly includes a first sensor, the sensor operable to detect an upper surface of the bag.

[0019] Preferably, said sensor assembly includes a second sensor, the second sensor being spaced from the first sensor in said conveyor direction so that the sensors are spaced along said length, with both sensors being operable to provide a signal indicative of volume of the bag.

[0020] Preferably, each sensor detects an upper surface of the bag.

09 02 23

BRIEF DESCRIPTION OF DRAWINGS

[0021] Preferred forms of the present invention will now be described by way of example with reference to the accompanying drawings wherein:

[0022] Figure 1 is a bag engaging assembly, the assembly being sectioned along the line 1-1 of Figure 2; and

[0023] Figure 2 is a schematic end elevation of the assembly of Figure 1.

DESCRIPTION OF EMBODIMENTS

[0024] In the accompanying drawings there is schematically illustrated an assembly 10 to engage sealingly closed bags 11 that contain a product. As a particular example, the bag 11 may be a bag containing snack foods. The bag 11 would have a longitudinal seal 12 and end seals 13. Each bag 11 will have a predetermined volume and is sealingly closed.

[0025] The assembly 10 includes a conveyor 14. The conveyor 14 includes an endless belt 15 having an upper conveying length 16 that is moved in a conveying direction 17. The length 16 extends generally horizontally between a downstream end 18 and an upstream end 19, with the bags conveyed in the direction 17 to the downstream end 18 from where the bags 11 are delivered from the assembly 10. The bags 11 rest on the length 16, as the length 16 provides an upwardly facing surface.

[0026] The conveyor 14 also includes a motor/gear box assembly 20 that drives the conveyor belt 15 in the direction 17 by means of a drive roller 21.

[0027] The conveyor 14 includes a base 22 upon which the belt 15 is mounted, while also mounted on the base 22 is a compression device 24. The compression device 24 engages the bags 11 and compresses the bags 11 against the length 16.

[0028] The compression device 24 includes a loop member 29 that includes two spaced, parallel chain loops 25 that support, and between which there extends, a plurality of springs (resilient members) 26. The springs 26 extend generally horizontally and transverse of the length 16.

[0029] The chain loops 25 are driven in the direction 27 so that the length 28 of the loop member 29 moves in the conveying direction 17 at the same speed as the length 16, so that the lengths 28 and 16 move in unison.

[0030] The chain loops 25 pass about an idler sprocket assembly 30 as well as a drive sprocket assembly 31. The drive sprocket assembly 31 includes a motor 32 that is coordinated with the motor 20 so that the lengths 16 and 28 move in unison in the conveying direction 17.

[0031] Mounted with the device 24 are two sensors 33 and 34 with the sensor 34 spaced from the sensor 33 in the direction 17 toward the downstream end 18. Each of the sensors 33 and 34 detects the upper surface of the bag 11, so as to provide a signal that is an indication of the depth of the bag 11, and therefore the volume of the bag 11. However the device 24 is operable with a single sensor 33 or 34.

[0032] As the bags 11 pass in the direction 17, they are compressed by the springs 36. Accordingly, if there is a leak in the bags 11, the volume of the bag 11 will decrease, so that when the depth of the bag 11 is detected by the sensor 33, a reduced depth will be indicative of a bag 11 that leaks.

[0033] When compressing the bags 11, the springs 36 resiliently deform upwardly, and return to their rest position when not engaged with a bag 11.

[0034] The sensors 34 communicate with a central computer so as to identify the faulty bags 11 so that they can be removed from the process.

[0035] In addition to detecting leaks, the assembly 10 also provides the bags 11 of a more uniform configuration at the downstream end 19. In particular, the springs 26 engage the bags 11 so that the bags 11 assume a more uniform configuration.

[0036] The compression device 24 is adjustable in respect of distance from the length 16 by a "parallelogram" arrangement that includes a pair of generally parallel linkages 35. Each of the linkages 35 is pivotally attached to the device 24, and pivotally attached to the base 22, so that the length 28 remains generally parallel to the length 16.

[0037] The linkages 35 are attached to drive shafts 36 which are moved angularly about their longitudinal axes by the drive device 23. The drive device 23 would include an electric motor and the gear box assembly, and would be operated to ensure that the length 28 is located at a correct distance from the length 16 to match the size of the bags 11 being conveyed.

CLAIMS:

1. An assembly to engage closed flexible bags, the assembly including:

a base;

a conveyor mounted on the base and having an upstream end and a downstream end between which there is a moveable conveying length that provides an upwardly facing surface upon which the bags rest; and

a resilient member mounted above the conveying length and moveable in unison in said direction with said length but spaced therefrom so as to engage the bags on the conveying length;

wherein the assembly includes a compression device including said resilient member, with the compression device including at least one loop member that is moveable in unison with said conveyor, the loop member providing a mounting for said resilient member so that said resilient member is moveable in unison with said length;

09 02 23

said resilient member is a first resilient member, and said assembly includes further resilient members, with the resilient members being spaced along said loop member; and

each resilient member is an elongated spring extending generally horizontally, and transverse relative to said length.

2. The assembly of claim 1, wherein said loop member is a pair of chained loops, the chained loops being spaced with the springs extending therebetween.

3. The assembly of claim 1 or 2, wherein said assembly includes a sensor assembly operatively associated with the conveyor and resilient member, to provide a signal indicative of bag volume to thereby enable detection of bags that leak.

4. The assembly of claim 3, wherein said sensor assembly includes a first sensor, the sensor operable to detect an upper surface of the bag.

5. The assembly of claim 4, wherein said sensor assembly includes a second sensor, the second sensor being spaced from the first sensor in said conveyor direction so that the sensors

are spaced along said length, with both sensors being operable to provide a signal indicative of volume of the bag.

6. The assembly of claim 5, wherein each sensor is configured to detect an upper surface of the bag.

09 02 23