Sept. 19, 1950 V. M. NEWMAN 2,522,582

NEEDLE DRIVING APPARATUS FOR SEWING MACHINES

Filed Feb. 10, 1949

FIG. 1.

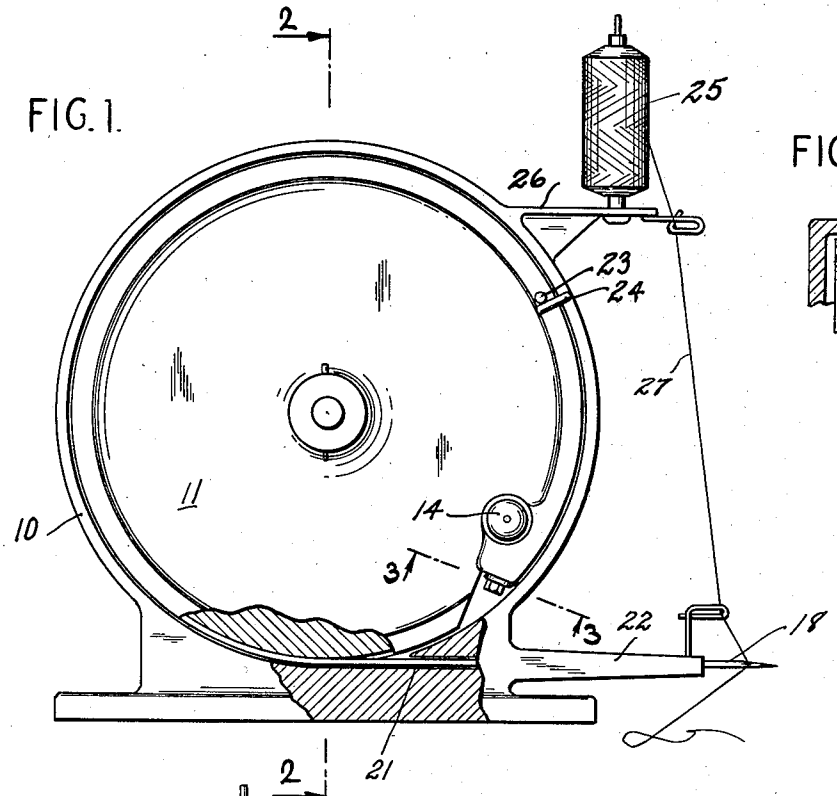

FIG. 4.

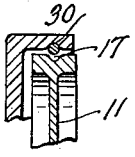

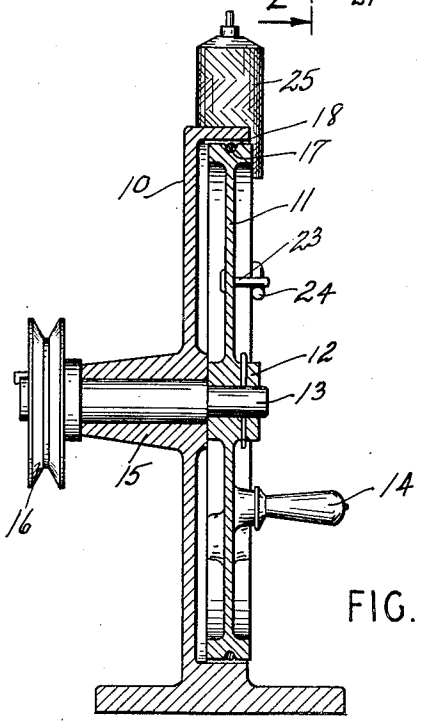

FIG. 2.

FIG. 3.

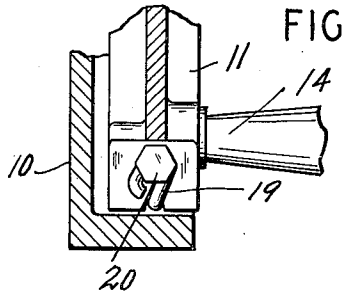

INVENTOR.
Victor M. Newman
BY
D. Stephen Baker
ATTORNEY.

Patented Sept. 19, 1950

2,522,582

UNITED STATES PATENT OFFICE

2,522,582

NEEDLE DRIVING APPARATUS FOR SEWING MACHINES

Victor M. Newman, New York, N. Y.

Application February 10, 1949, Serial No. 75,596

6 Claims. (Cl. 112—221)

1

This invention relates to a needle driving apparatus for sewing machines and more particularly to a structure for actuating an elongated needle in the sewing of a necktie.

It has been known to crimp or pleat fabrics over a substantially stationary block and thereafter drive an elongated needle through the crimped fabric so as to produce stitches therein. According to the present invention, an elongated needle is disposed around the periphery of a rotatable wheel which is enclosed in a stationary housing. When the wheel is rotated, the needle is guided by the inner wall of the housing and is forcibly driven through an outlet in the housing. The structure is positioned adjacent to the fabric crimping machine and the threaded needle is appropriately guided into the machine and driven along the crimping means so as to produce stitches in the crimped fabric when the wheel is reversely rotated and the needle accordingly withdrawn. By providing an arcuate housing which directs the force of the actuated needle in the proper direction, a positive action is assured notwithstanding the fact that the needle may buckle in relation to the driving wheel. The housing is formed with an outlet nozzle which guides the free end of the needle with precision and accuracy so that it cannot buckle in the outlet end of the housing.

The invention will be further understood from the following description and drawings in which:

Fig. 1 is a side elevational view of the needle driving apparatus, partly broken away.

Fig. 2 is a section taken substantially along the lines 2—2 of Fig. 1.

Fig. 3 is a fragmentary section taken along the lines 3—3 of Fig. 1.

Fig. 4 is a fragmentary view illustrating a modification wherein the annular flange of the housing is formed with a needle guiding groove.

The apparatus comprises an arcuate stationary housing 10 which may have an open side, if desired, in order to provide access to the wheel 11 as illustrated in Fig. 2. However, it is evident that the wheel 11 may be partially enclosed at its periphery by extending the housing thereover. As illustrated, housing 10 is formed with an integral annular flange which embraces the periphery of wheel 11. The hub 12 of wheel 11 is connected to shaft 13 which is rotatable in the housing so as to rotate the wheel 11 accordingly. Both manual or mechanical driving means may be provided. For the first expedient, a handhold member 14 is connected near the periphery of the wheel so that actuation thereof

2

will rotate the wheel within the housing. Shaft 13 is enlarged at its other end and rotatably maintained within hub 15 of the arcuate housing. A pulley 16 may serve to apply mechanical driving power to the shaft 13 in lieu of manual actuation of handhold member 14.

The periphery of wall 11 is formed with a groove 17 in order to receive the flexible elongated needle 18. Needle 18 has one end 19 thereof connected as by bolt 20 to a peripheral point on wheel 11 which is adjacent handhold member 14. The needle 18 which is, of course, resiliently flexible thereafter extends arcuately within the groove 17 and along the floor 21 of the housing as the needle emerges from the housing. A nozzle 22 communicates with the opening above floor 21 so that the needle is guided outwardly in tangential relationship to the wheel and housing. Accordingly, from the position illustrated in Fig. 1, the handhold member 14 may be actuated in a counterclockwise direction whereupon the needle will be driven outwardly so as to effect its sewing function. In order to limit reverse movement thereof, a pin 23 is formed on the wheel 11 while a stop bar 24 is formed on the housing 10. When the pin 23 meets the stop bar 24, further inward movement of the needle is prevented. A spool of thread 25 is supported on ledge 26 of the housing 10 and the thread 27 is inserted into the eye of the needle 18 as will be understood.

When the apparatus is to be used, the needle is appropriately threaded and the handhold member 14 actuated in order to drive the needle as required. The spacing between the periphery of the wheel 11 and the inner peripheral wall of the annular flange of housing 10 is small and may be slightly less than the width of the diameter of the needle. Accordingly, the needle 18 can buckle very little as it is actuated, but such buckling is of no adverse consequence in that the inner peripheral wall of the annular flange of the housing acts as a guide for directing the force of the actuated needle in the proper course. If desired, such inner peripheral wall may be formed with a groove 30 opposed to groove 17 so as to receive the needle as it departs radially outwardly from groove 17 and so as to thus enhance the guiding function of the inner peripheral wall. Groove 30, as shown in Fig. 4, will guide the needle accurately as it departs from groove 17. The nozzle 22 may fit the needle diameter closely so that it is substantially restrained from wavering as it emerges therefrom.

The inner peripheral wall of the housing may be of polished metal in order to offer minimum friction to movement of the needle when the wheel is actuated. After the needle has been reciprocated through the entire crimped length of the fabric, and the thread retained as will be understood by those skilled in the art, the hand-hold member 14 is reversely rotated to return the needle into the housing 14 in preparation for a succeeding operation.

The aforesaid structure provides an elongated needle actuating device which is of utmost simplicity although effective for its intended purpose. Changes and modifications may readily suggest themselves and it is therefore desired to define the scope of the invention by the claims hereto annexed.

What is claimed is:

1. An elongated needle actuating apparatus comprising a rotatable wheel, means to rotate said wheel to project or retract the needle, an elongated, resiliently flexible needle having one end connected to a peripheral point on said wheel and extending in one turn along the periphery of said wheel when the wheel is in needle retracted position, and an enclosing stationary guide wall adjacent the periphery of the wheel for limiting radially outward movement of said needle, said guide wall being polished so as to offer minimum friction toward travel of said needle as it bears thereagainst during actuation of said wheel.

2. Apparatus according to claim 1 and wherein the spacing between the periphery of said wheel and said guide wall is less than the diameter of said needle.

3. Apparatus according to claim 1 and including an elongated nozzle integral with said guide wall, said needle travelling through said nozzle when being projected, the longitudinal axis of said nozzle being tangential to said wheel whereby said needle is tangentially projected.

4. A needle actuating apparatus comprising an arcuate, stationary housing, an annular flange on said housing, a wheel rotatably supported in said housing and having its periphery embraced by said flange, means to rotate said wheel, an elongated needle having one end thereof connected to said wheel and extending along the periphery thereof, said housing being formed with exit means for permitting tangential movement of said needle in respect to said wheel and housing, as said wheel is rotated.

5. A needle actuating apparatus comprising an arcuate, stationary housing, an annular flange on said housing, a wheel rotatably supported in said housing and having its periphery embraced by said flange, means to rotate said wheel, an elongated, resiliently flexible needle having one end thereof connected to said wheel and extending in one turn along the periphery thereof when the wheel is in needle retracted position, and an elongated nozzle formed on said housing and extending tangentially thereof, the other end of said needle being receivable through said nozzle so as to reciprocate the needle tangentially of said wheel as the wheel is rotated.

6. An elongated needle actuating apparatus comprising a rotatable wheel, means to rotate said wheel to project or retract the needle, an elongated resiliently flexible needle having one end connected to a peripheral point on said wheel and extending along the periphery of said wheel when the wheel is in needle retracted position, and an enclosing, stationary, annular guide wall disposed around and adjacent the periphery of the wheel for limiting radially outward movement of said needle, the radius of said annular guide wall being greater than the radius of said wheel to an extent less than the diameter of said needle, and a groove formed in the periphery of said wheel for longitudinally seating said needle.

VICTOR M. NEWMAN.

REFERENCES CITED

The following references are of record in the file of this patent:

UNITED STATES PATENTS

Number	Name	Date
791,124	Baehr	May 30, 1905
1,820,314	Mendelson	Aug. 25, 1931
1,970,786	Weisbaum	Aug. 21, 1934
2,379,733	Malek	July 3, 1945
2,477,589	DuShane	Aug. 2, 1949