March 1, 1949. H. E. OVERACKER 2,463,417

TUNABLE CIRCUIT

Filed Aug. 8, 1945 2 Sheets-Sheet 1

FIG.1

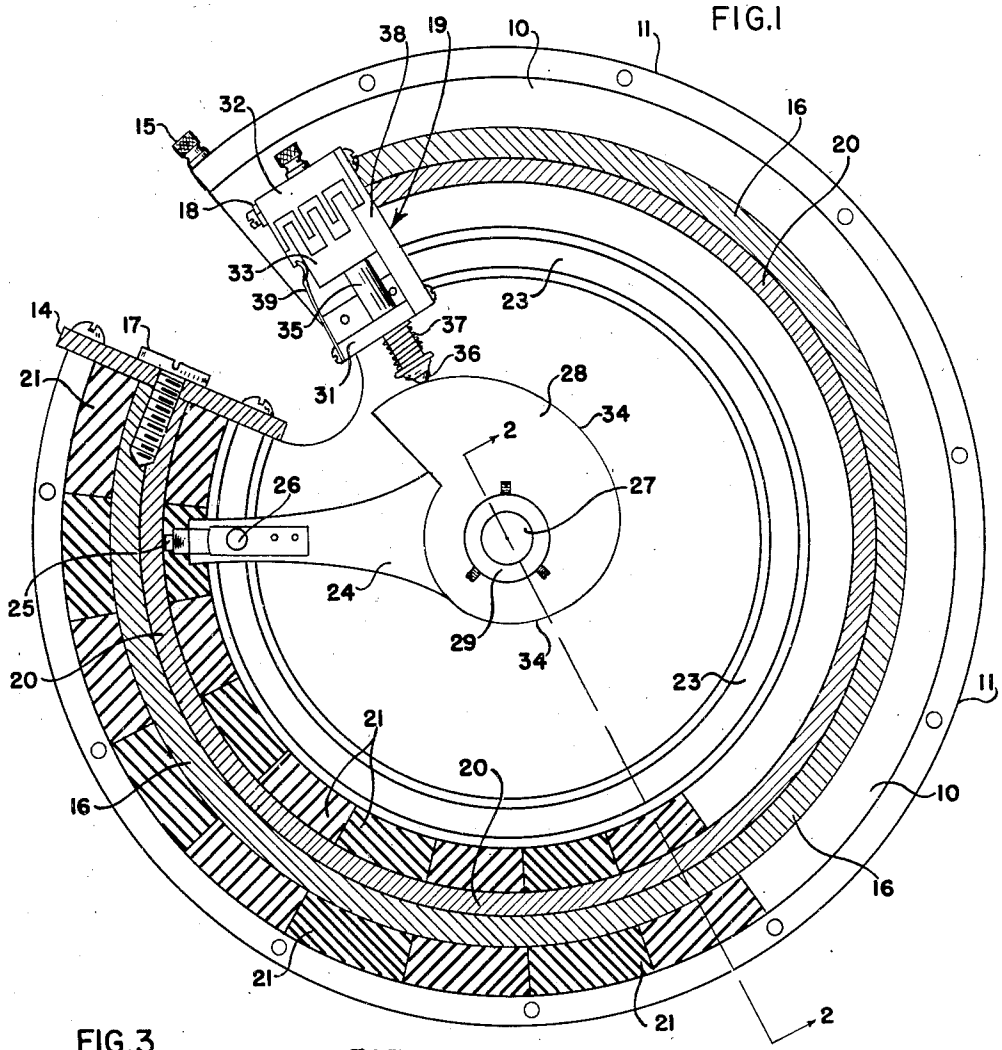

FIG.3

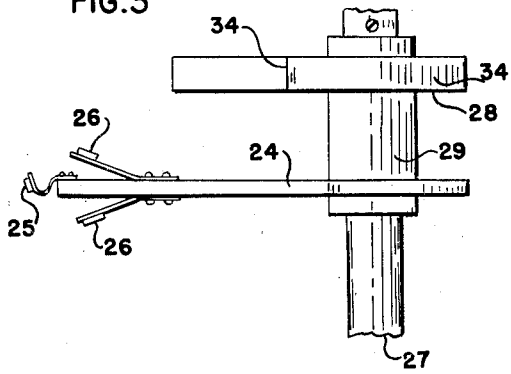

INVENTOR
HORACE E. OVERACKER
BY
William D. Hall.
ATTORNEY

March 1, 1949. H. E. OVERACKER 2,463,417

TUNABLE CIRCUIT

Filed Aug. 8, 1945 2 Sheets-Sheet 2

FIG. 4

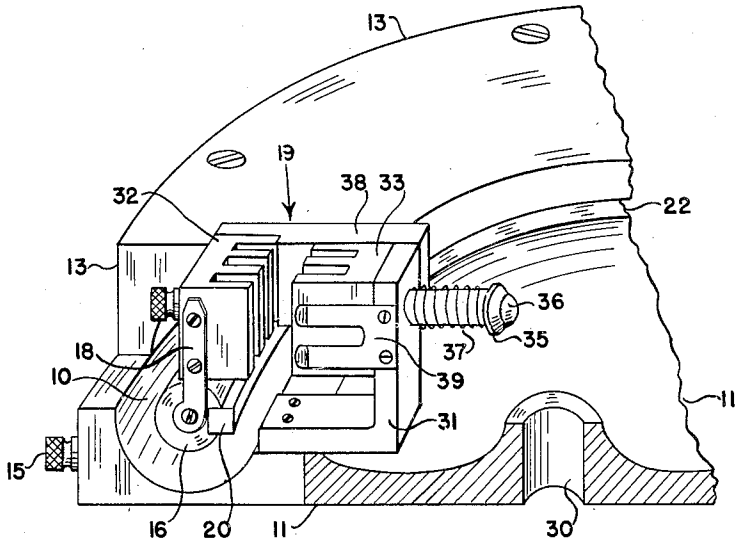

FIG. 2

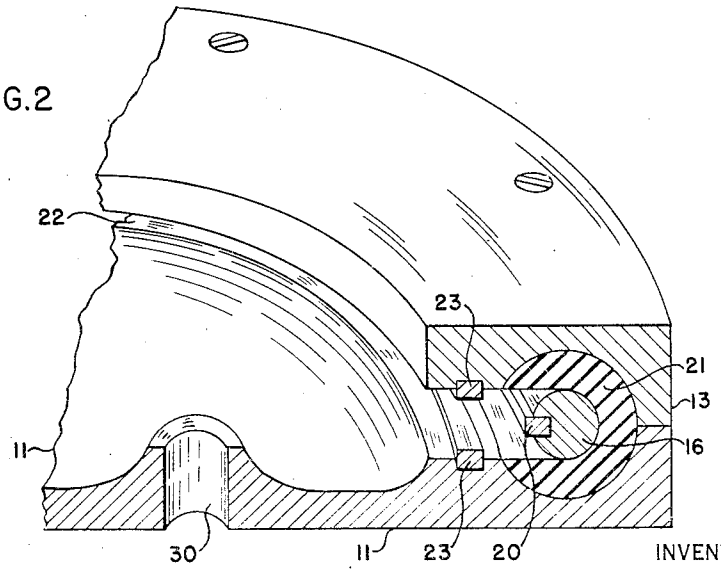

INVENTOR

HORACE E. OVERACKER

BY William D. Hall

ATTORNEY

Patented Mar. 1, 1949

2,463,417

UNITED STATES PATENT OFFICE

2,463,417

TUNABLE CIRCUIT

Horace E. Overacker, Cambridge, Mass., assignor to the United States of America as represented by the Secretary of War

Application August 8, 1945, Serial No. 609,648

5 Claims. (Cl. 178—44)

1

This invention relates generally to tunable radio frequency circuits. More specifically it relates to a tunable circuit formed by a section of transmission line tunable over a wide band of high frequencies which is useful in oscillator, amplifier, and other applications of tuned circuits and to the means for tuning the circuit.

Use of parallel and concentric transmission lines as resonant circuits tuned by the adjustment of shorting elements between the conductors of the transmission lines is well known to prior art. Since the frequency to which such a circuit is tuned is substantially inversely proportional to the length of the line, the lower the frequency it is desired to reach the longer the line must be. However, such frequencies, although relative low, are too high for the use of ordinary elements having lumped inductance and capacity. Thus at relatively low frequencies a line of extreme length would be required. Even if the low frequency end of the operating range extended into the frequencies where lumped reactance elements could be used, the entire range could not be covered by a single piece of apparatus because the higher frequencies would require the use of transmission lines.

An added disadvantage in the use of transmission lines of the prior art arises because movement of the tuning element is rectilinear and can be ganged with the rotational movement of other controls only by complicated mechanical linkage which introduces back lash and other difficulties.

It is an object of the present invention to devise a circuit comprising a transmission line of short physical length with tuning means that make it tunable over a wider range of frequencies than has been accomplished by comparable transmission lines of the prior art and that will operate satisfactorily over the entire range.

It is a further object of the invention to increase the electrical length of a transmission line of given physical length and to arrange the transmission line in a compact form.

It is a further object of the invention to devise positively controlled tuning means which over the entire tuning range, make positive and direct electrical contact between the movable parts.

These objects are accomplished by disposing the transmission line in a circular arrangement, shorting the line by a rotating contact, increasing its electrical length by use of high dielectric constant between its conductors for a portion of the length of the line, and by a variable capacitor, controlled by the same means as those controlling the rotating contact.

2

Other objects, features and advantages of this invention will suggest themselves to those skilled in the art and will become apparent from the following description of the invention taken in connection with the accompanying drawings in which:

Fig. 1 is a plan view partially in cross-section of apparatus embodying the invention;

Fig. 2 is a combined cross-section along line 2—2 of Fig. 1 with a fragmentary isometric view.

Fig. 3 is a view showing the details of the control arm, its contacts, and the condenser cam; and

Fig. 4 is an isometric view of the open end of the transmission line also showing the variable condenser structure and terminals.

Referring to Figs. 1 and 2, the lower half of the outer conductor 10 of the transmission line is formed by an annular channel of semicircular cross-section formed near the circumference of the metallic element 11 which forms the framework for the support of the entire structure. The upper half of outer conductor 10 is formed in an annular ring 13 fitting on framework 11. The circular channel thus formed does not extend for a complete circle but starts at back plate 14 and extends for all but a few degrees of a complete circle to the open end terminating at terminal 15. The opening between the permanently shorted end 14 and terminal 15 is large enough to permit the necessary connections to outside circuits or, when desired, to mount a vacuum tube or similar apparatus. The inner conductor 16 which is of sufficient strength and cross-section to support its own weight over a considerable space is supported at one end by a back plate 14 and screw 17 and at the other end by attachment 18 to the condenser structure 19 which in turn is rigidly attached to framework 11. Conductor 16 may be directly connected to framework 11 by any suitable insulating bracket if no condenser is used. The inner conductor may be solid or hollow as desired. The inner conductor has inserted along the inner circumference of the circle it forms a contact track 20 of metal, such as Monel metal, which combines good contact properties with favorable wearing properties.

For a portion of the length of the transmission line, the inner conductor 16 is surrounded and the space between it and outer conductor 10 is completely filled with a material of high dielectric constant 21. This dielectric material may

be in two solid pieces, an upper half and lower half, or in segments.

Outer conductor 10 is provided with a longitudinal slot 22, comparable in width to the diameter of inner conductor 16, for its entire length along its inner circumference. There is a contact track 23, 23 inserted in each face forming this slot. This slot extends through dielectric material 21 and permits contact with contact track 20 and contact tracks 23, 23 by contactors carried by arm 24 in a manner to be described in detail hereinbelow.

The effective electrical length of the transmission line and therefore the resonant frequency of the circuit is varied by changing the position of the contactors 25, and 26, 26 along the line and short circuiting inner and outer conductors. This is accomplished by means of control arm 24 Fig. 3, bearing spring contactors 25, and 26, 26. These contactors are made of a metal, such as a beryllium copper alloy, which combines good spring action, good contact conductivity, and favorable wearing characteristics against the material used for the contact tracks. Contactor 25 for the entire length of contact track 20, makes contact therewith as do contactors 26, 26 with respect to tracks 23, 23.

Control arm 24 is mounted and rotates with rotatable shaft 27 at the center of the circle formed by the transmission line. There is mounted on this shaft condenser cam 28. For convenience of manufacture, control arm 24 and condenser cam 28 may, if desired, be made integral with a bushing 29 by which they may be mounted on shaft 27. Shaft 27 is supported by bearing 30.

Condenser structure 19 is mounted on framework 11 by a bracket 31 near the open end of the transmission line. The top piece 13 stops before it reaches the place when condenser 19 is mounted. Condenser 19 is a variable condenser consisting of fixed plates 32 and movable plates 33. It is connected across the open end of the transmission line with fixed plates connected to inner conductor 16 and movable plates to outer conductor 10. The area of interleaved plates is varied by rectilinear motion between fixed plates and movable plates. This motion is imparted to the movable plates in one direction by the face 34 of cam 28 acting on push rod 35 provided with ball bearing 36 and in the other direction by spring 37. The movable plates are mounted against and guided by supporting block 38. Block 38 is made of insulating material and also serves to support fixed plates 32 on the condenser framework 31. Block 38 also provides insulation between inner conductor 16 which as before stated is connected by attachment 18 to the condenser structure and outer conductor 10. The condenser is provided with a laterally bearing spring 39 to hold the movable plates in proper lateral position and in good electrical contact with outer conductor 10. The condenser and cam are designed so that at the high frequency end of the operating range the movable plates are retracted a sufficient distance from the fixed plates to preclude the possibility of appreciable end effect and so that full capacity is in the circuit when control arm 24 is at the limit of its travel at the permanently shorted end.

From the foregoing description of the physical arrangement of the apparatus it is obvious that, for a given physical length of transmission line, the circular arrangement provides a much more compact device than would be possible if the

transmission line were laid out in the conventional manner, that is, a straight line. For a given physical length, the electrical length is further increased by the use of the dielectric 21 and the capacitor 19 as will now be explained.

Dielectric material 21 is placed in a portion of the line at the shorted end 14 of the transmission line and cam 28 is so arranged on shaft 27 that capacity from capacitor 19 is added only after the rotating contactors 25 and 26, 26 are contacting the portion of the transmission line including dielectric 21. As is well known, the presence of material having a dielectric constant between the conductors of a concentric line increases distributed capacity and electric energy travels through the dielectric material at a slower rate than it would travel through air. These phenomena have the effect of increasing the electrical length of the line.

As control arm 24 is rotated from the open end at terminal 15, the electrical length of the transmission line is increased and its resonant frequency decreased at a rate dependent solely on the physical length of the line between its open end and the shorting contactors 25 and 26, 26 which is determined by the angular position of control arm 24. As soon as control arm 24 contacts the portion of the transmission line where inner conductor 16 is surrounded by dielectric material 21 the rate at which the electrical length of the transmission line increases and consequently the rate of decrease of its resonant frequency due to the increase in distributed capacity is accelerated.

Cam 28 is mounted on shaft 27 or bushing 29 in such angular relation to control arm 24 that no capacity from condenser 19 is introduced into the circuit of the transmission line until control arm 24 has travelled over some portion of the transmission line. In practice, it has been usual to delay the introduction of capacity from condenser 19 until after contact arm 24 has traversed an appreciable length of line containing dielectric material 21. Introduction of capacity from the condenser into the circuit has a similar but separate effect to that of the dielectric material on the rate of increase in electrical length of the transmission line and decrease in its resonant frequency. Since these effects are concurrent and additive that rate is even more greatly accelerated.

It is thus seen that the operation of the line at the high frequency end of the operating range is unaffected by the capacity added by the dielectric material 21 and condenser 19 but that these elements have, at the low frequency end, the effect of greatly adding to the electrical length of the line and thus extending the low frequencies over which it can be tuned and extending the operating range.

Due to the compact form and convenient arrangement of the parts, the device is readily connected to other circuits. Thus, if it is desired to use it as a tunable circuit in a vacuum tube oscillator, the tube electrodes can be connected to the outer conductor at terminal 15 and to the inner conductor at attachment 18, or any suitable place on fixed plates 32. If inner conductor 16 is hollow it may provide a convenient conduit through which direct current supply leads may be lead. The device may also be combined with other devices of the same type and ganged with the other devices to be tunable over the same frequency range or over a different but related fre-

quency range as is desired for producing an intermediate frequency.

While there has been here described what is at present considered to be the preferred embodiment of the invention, it will be obvious to those skilled in the art that various changes and modifications may be made therein without departing from the scope of the invention.

What is claimed is:

1. A tunable radio frequency circuit comprising a concentric transmission line arranged in a circular form and having an inner conductor and an outer conductor, said line being open at one end, material having a high dielectric constant disposed between said inner conductor and said outer conductor along a portion of said line remote from said open end, a slot disposed along the length of the inner circumference of said outer conductor and the inner portion of said dielectric material, contact tracks on the portion of said outer conductor adjacent to said slot, a contact track along the inner circumference of said inner conductor, contactors mounted on a rotatable arm disposed to contact said contact tracks whereby said line may be shorted by said contactors anywhere along its length, a variable capacitor connected across said inner and outer conductors operated by a cam mechanically connected to said rotatable arm, said cam disposed so that no capacity from said capacitor is introduced into said circuit until said contacts have travelled over a portion of said line including said dielectric material.

2. A tunable radio frequency circuit designed to operate over a wide range of frequencies comprising a circularly arranged concentric transmission line having an inner conductor and an outer conductor, movable means for short circuiting said conductors, means for extending the electrical length of said line comprising a material of high dielectric constant disposed between said inner conductor and said outer conductor along a portion of said line used when said circuit is tuned near the low frequency end of said operating range, additional variable capacitor means controlled by the movement of said movable short circuiting means for introducing additional capacity into said circuit when it is tuned near the low frequency end of said operating range.

3. A tunable radio frequency circuit comprising a circularly arranged concentric transmission line circumferentially interrupted to provide terminal ends therefor, variable capacitor means connected across one terminal end thereof, distributed capacitor means disposed along a portion of said line adjacent the other terminal end thereof, short circuiting means adjustable along the length of said transmission line, means operative by said short circuiting means to vary the capacity of said variable capacitor means and to render said variable capacitor inoperative when said short circuiting means is adjusted along the portion of said line that does not include said distributed capacitor means.

4. The circuit according to claim 3 wherein adjustment of said short-circuiting means along the portion of said transmission line including said distributed capacitor means renders operative said variable capacitor.

5. The circuit according to claim 4 wherein the capacity introduced into said circuit by said distributed capacitor and said variable capacitor is additive.

HORACE E. OVERACKER.

REFERENCES CITED

The following references are of record in the file of this patent:

UNITED STATES PATENTS

Number	Name	Date
2,121,855	Buschbeck	June 28, 1938
2,292,254	VanBuren	Aug. 4, 1942
2,379,047	Thomas	June 26, 1945
2,400,597	Peterson	May 21, 1946