Sept. 2, 1930. W. A. PAPWORTH 1,775,048

CENTRIFUGAL CLOTHES DRIER

Filed Jan. 19, 1926 2 Sheets-Sheet 1

FIG. 1.

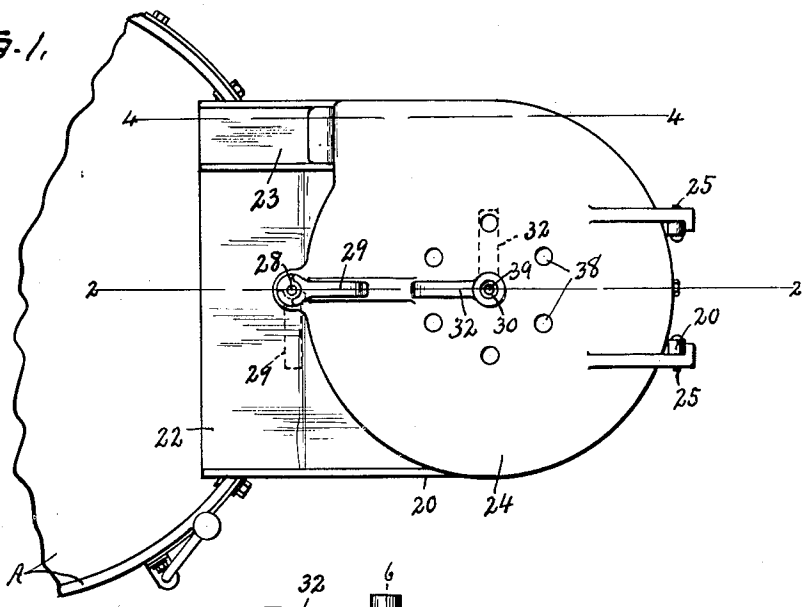

FIG. 2.

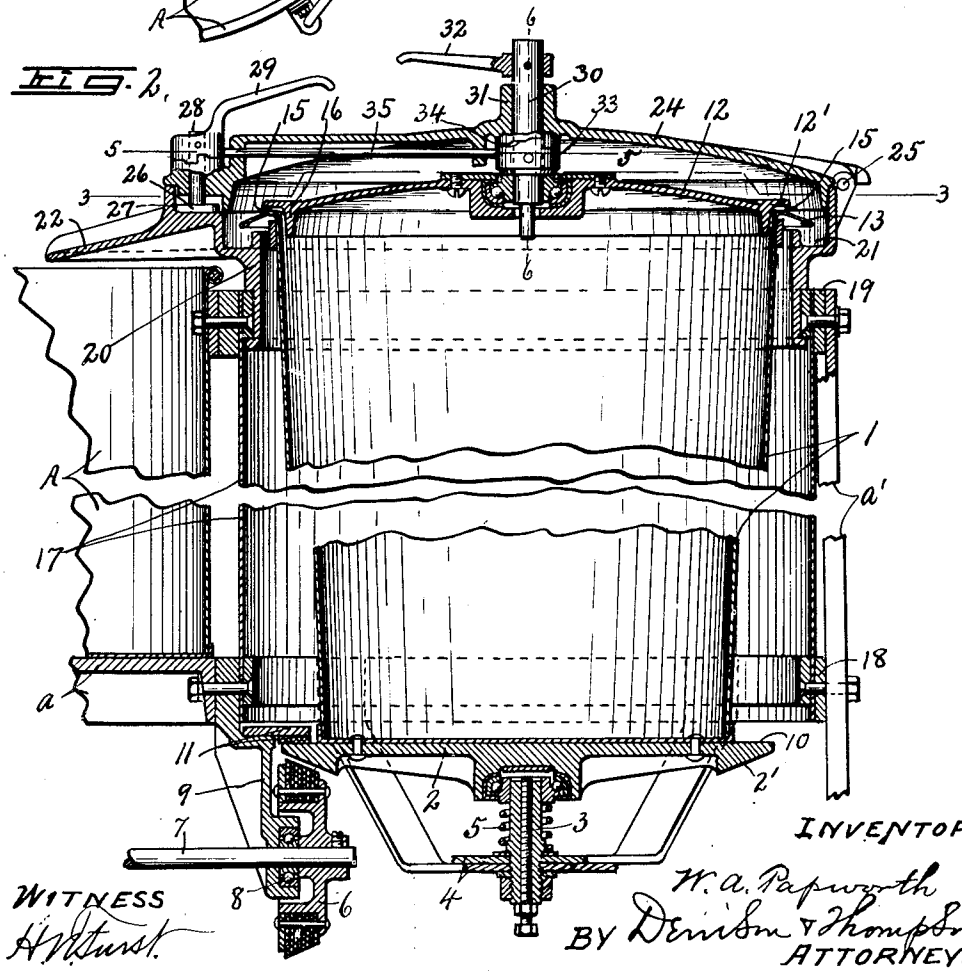

WITNESS
H. W. Hurst

INVENTOR
W. a. Papworth
BY Denison & Thompson
ATTORNEYS

Sept. 2, 1930. W. A. PAPWORTH 1,775,048

CENTRIFUGAL CLOTHES DRIER

Filed Jan. 19, 1926 2 Sheets-Sheet 2

Fig. 3,

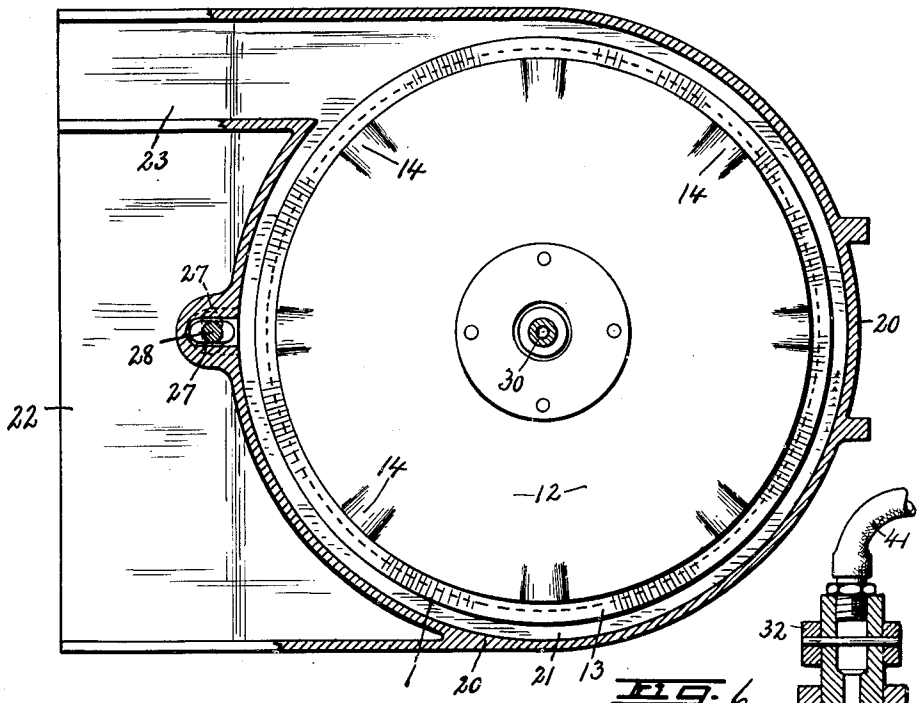

Fig. 6,

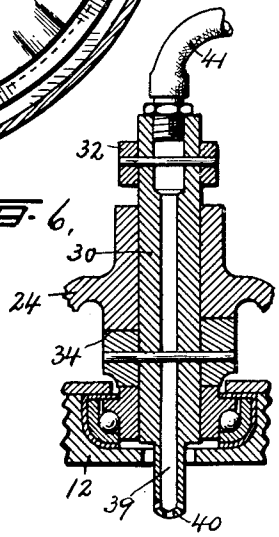

Fig. 4,

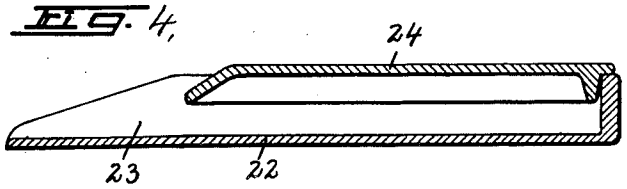

Fig. 5,

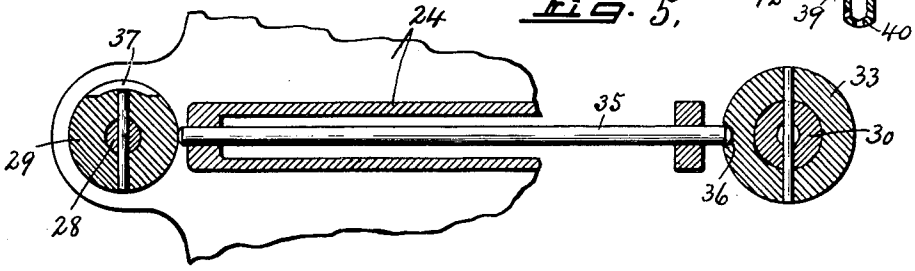

INVENTOR

W. A. Papworth

BY Dewson & Thompson

ATTORNEYS

WITNESS

H. W. Hurst

Patented Sept. 2, 1930 1,775,048

UNITED STATES PATENT OFFICE

WALTER A. PAPWORTH, OF SYRACUSE, NEW YORK, ASSIGNOR TO SYRACUSE WASHING MACHINE CORPORATION, OF SYRACUSE, NEW YORK, A CORPORATION OF DELAWARE

CENTRIFUGAL CLOTHES DRIER

Application filed January 19, 1926. Serial No. 82,251.

This invention relates to a centrifugal clothes drier.

These centrifugal driers are adapted to be used in connection with washing machines as a substitute for the usual wringers for drying the clothes immediately following the washing operation and are preferably attached directly to the washing machine frame or wash tub to become a unitary part of the laundrying outfit but obviously may be used independently thereof.

In the use of centrifugal driers of this type in which the clothes receptacle is adapted to revolve about a vertical axis the fluid expelled from the clothes by centrifugal force impinges against and rises upwardly along the side walls of the receptacle so that if provision is made for the discharge of the fluid over the upper marginal edge of the receptacle the bottom and side walls may be made imperforate and one of the objects of the present invention is to provide means at or near the top of the imperforate receptacle and preferably between the lid and marginal edge thereof whereby the fluid expelled from the clothes by centrifugal force may overflow into a receiving conduit or annular trough having a suitable discharge.

Another object is to provide this annular conduit or trough with a tangential branch discharge passage projecting laterally therefrom in such manner that the overflowing fluid may be discharged into an adjacent tub for reuse in washing, if desired.

Another object is to provide for a limited axial movement of the receptacle whereby it may be moved into and out of engagement with its driving means.

A further object is to provide automatic brake means for stopping the rotation of the receptacle after it has been disengaged from its driving means.

The receptacle is provided with a removable lid rotatable therewith and preferably mounted upon a suitable cover which is movable to and from a position across the open upper end of the receptacle and one of the specific objects of the present invention is to provide means for locking and releasing the cover in and from its closed position and to prevent the release of the locking means or opening of the cover while the receptacle is being rotated.

Other objects and uses relating to specific parts of the machine will be brought out in the following description.

In the drawings:

Fig. 1 is a top plan of a centrifugal clothes drier embodying the various features of the invention and adjacent portion of the tub of a mechanical washer to which it is attached, the dotted lines indicating different positions of adjustment of the drain board.

Fig. 2 is an enlarged vertical sectional view taken in the plane of line 2—2, Fig. 1.

Fig. 3 is a horizontal sectional view taken in the plane of line 3—3, Fig. 2.

Fig. 4 is an enlarged detail vertical sectional view taken in the plane of line 4—4, Fig. 1.

Fig. 5 is a detail sectional view taken in the plane of line 5—5, Fig. 2.

Fig. 6 is an enlarged detail sectional view taken in the plane of line 6—6, Fig. 2.

As illustrated, this centrifugal drier is mounted upon one side of the tub as —A— of a mechanical clothes washer which, in turn, is supported upon a horizontal platform —*a*— of the main supporting frame.

This supporting frame may also be used as a part of the supporting means for the centrifugal drier in addition to one or more legs —*a'*—.

The centrifugal drier, as shown, comprises an upright downwardly tapered vat or container —1— made in the form of an inverted truncated cone having its bottom and side walls imperforate, the bottom wall being mounted upon and secured to a suitable platform or disk —2— to form a part thereof

and also to serve as means through which the receptacle as a whole may be rotated about a vertical axis.

The disk —2— is centrally journaled upon a suitable bearing post —3— on an underlying portion —4— of the main supporting frame —*a*— and also has a limited axial movement lengthwise of the bearing —3— against and with the action of a coiled spring —5— which surrounds the post —3— and forms a yielding support for the receptacle to permit the receptacle to be moved vertically into and out of engagement with a rotary driving element —6—.

This driving element is secured to a horizontal shaft —7— which is journaled in suitable bearings —8— in a bracket —9— on the main supporting frame —*a*—, said shaft being adapted to be connected to any available source of power such as the motor driven mechanism of the washer or to a separate motor if desired.

The driving element —6— preferably consists of a conical friction disk adapted to be engaged by a conical friction face —2′— on the disk —2— when the receptacle is depressed against the action of the spring —5— for engaging the disk —3— with the driving disk.

The marginal edge of the disk —2— extends radially some distance beyond the side walls of the lower end of the vat —1— to form an annular brake surface —10— which when the receptacle —1— is elevated by the spring —5— is adapted to engage an overlying brake shoe —11— on the bracket —9— as shown in Fig. 2 for stopping the rotation of the receptacle when disengaged from the driving element —6—.

The upper or larger end of the container —1— is provided with a lid or closure —12— rotatable therewith but adapted to be displaced when necessary to permit the insertion and removal of clothes into and from the open upper end thereof.

The main body of the receptacle —1— is perferably made of sheet metal and is provided at its upper end with an outwardly and downwardly extending marginal flange —13— while the lid —12— is also provided with a marginal flange —12′— overlying the adjacent portion of the flange —13— and preferably corrugated at —14— at intervals throughout its periphery to form a series of discharge passages —15— leading from the interior to the exterior of the container —1—, said lid being also provided with a depending annular flange —16— within the upper end of the vat —1— in spaced relation thereto to form the inner walls of the passages —15—.

The object of these passages —15— and —16— is to permit the escape of any fluid which may be expelled from the clothes by centrifugal force as the receptacle —1— with the wet clothes therein is rotated at a more or less high rate of speed which causes the water to pass upwardly along said walls and through the passages —15— and —16— over the top of the flange —13—.

The receptacle —1— is surrounded by a casing or jacket —17— extending nearly the full length of the receptacle in radially spaced relation thereto and has its lower end secured to and within an annular ring —18— on the main supporting frame —*a*—.

The upper end of the casing —17— is also secured to the main supporting frame through the medium of an annular ring —19— and is provided with an upwardly extending cast metal extension —20— having an annular groove —21— underlying the outer edge of the flange —13— and constituting a conductor for receiving the fluid which may be discharged through the passages —16— and —15—, see Fig. 2.

The side of the extension —20— adjacent the tub —A— is provided with a laterally and downwardly extending shelf or drain board —22— arranged to overlie the upper end of the tub to facilitate the transfer of the wet clothes from the washer tank —A— to the receptacle —1— when the lid —12— is removed or opened.

This shelf —22— is provided with a branch passage —23— leading laterally from one side of the trough or conduit —21— tangential to the corresponding side of the revoluble receptacle —1— for conducting the water expelled from the clothes by the rotation of the receptacle from the conductor —21— into the washing or rinsing vat for reuse, or to any other place desired.

A cover —24— is movable to and from a position across the upper end of the vat —1— directly over the lid —12— and for this purpose is hinged at —25— to one side of the upper end of the extension —20— while its opposite side is movable into and out of engagement with the corresponding side of the extension —20— and is provided with a locking member —26— movable into and out of engagement with a keeper —27— on the shelf.

The locking member —26— is secured to the lower end of a spindle —28— which is journaled in the adjacent portion of the cover —24— and is provided at its upper end with an operating handle —29— by which it may be turned to move the lock —26— into and out of engagement with its keeper.

The lid —12— is mounted upon the cover —24— to open and close therewith and in order that it may be free to rotate with the receptacle —1— relatively to the cover —24— it is centrally journaled upon the lower end of a post —30— which, in turn, is journaled in a central bearing —31— in the cover —24— and is provided with an operating handle —32—.

A cam collar —33— is secured to the intermediate portion of the post —30— between the lid —12— and cover —24— and is provided with a cam face —34— adapted to engage a companion cam face on the underside of the adjacent portion of the cover whereby the rotation of the post —30— in one direction by means of the handle —32— will force the receptacle —1— downwardly against the action of its retracting spring —5— for engaging its friction face —2'— with the driving element —6— whereby rotary motion will be transmitted from said driving element to the receptacle —1— including its lid —12— about the vertically alined axes of the coaxial bearing posts —3— and —30—.

Suitable means is provided for preventing the opening of the cover —24— and lid —12— when the receptacle —1— is being rotated by its driving element —6— and also for preventing the axial operation of said receptacle into engagement with its driving element while the cover —24— and lid —12— are opened to reduce the liability of danger to the operator by contact with the rotating parts and escape of fluid by upward displacement into the room in which the machine is located and for this purpose is provided a locking bolt —35— which is slidable endwise in suitable bearings in the cover —24— between the post —30— and spindle —28— or rather between the collar —33— and hub of the handle —29—, Figs. 2 and 5.

The cam collar —33— is provided with a lengthwise peripheral groove —36— movable into and out of registration with the inner end of the locking bolt —35— as the handle —32— is adjusted rotarily to different positions indicated by full lines and dotted lines in Fig. 1, while the hub of the handle —29— is provided with a circumferentially extending peripheral groove —37— movable into and out of registration with the outer end of the locking bolt —35— as the handle —29— is adjusted to different positions.

The length of the bolt —35— is substantially equal to the distance between the base of each groove of the corresponding parts and the adjacent portion of the periphery of the other part while the grooves are so relatively arranged that when the cover —24— and lid —12— are closed and the handle —29— is turned to its locking position indicated by dotted lines in Fig. 1, the groove —37— will be registered with the adjacent end of the locking bolt —35— at which time the handle —32— and its cam collar —33— may be adjusted rotarily to the position indicated by dotted lines in Fig. 1 thereby causing one of the beveled walls of the groove —36— to ride against the adjacent end of the bolt —35— for forcing said bolt endwise or outwardly into the registering groove —37— of the handle —29— while the inner end of the bolt will ride against the periphery of the collar —33— for holding the bolt in its adjusted position.

During this rotary adjustment of the handle —32— and cam —33— the latter will ride against its companion face on the under side of the adjacent portion of the cover —24— thereby forcing the receptacle —1— downwardly to engage its lower friction face —2'— with the driving element —6— for imparting rotary motion to the receptacle.

It is now evident that as long as the handle —32— and its cam collar —33— remain in their adjusted positions for effecting the rotation of the receptacle —1— the lever —29— and its locking member —26— will be held against return movement to their releasing positions by the engagement of the inner end of the locking bolt —35— with the periphery of the cam collar —33— and, therefore, cover —24— and lid —12— cannot be released for opening until the lever —32— and its cam collar —33— are returned to their starting positions with the groove —36— in registration with the inner end of the locking bolt —35— at which time the receptacle —1— will have been elevated out of engagement with its driving element —6— by the spring —5—.

When the lever —32— and its cam collar —33— are returned to their starting positions as just described the locking lever —29— may be turned to release its locking member —26— from engagement with the keeper —27— during which operation the periphery of the hub of the handle —29— will be brought into engagement with the locking bolt —35— for forcing the latter endwise inwardly into engagement with the registering groove —36— in the cam collar —33—.

The cover —34— is provided with one or more air-vent openings —38— to prevent the trapping of the air in the chamber between the cover —24— and lid —12— and thus permit the free exit of the fluid expelled from the clothes by centrifugal force through the passages —15—.

If desired the post —30— may be provided with a central lengthwise passage —39— therethrough from end to end and a spray nozzle —40—at its inner end while the outer end may be connected by a flexible conduit —41— to any available source of supply for rinsing water or for air, either warm or cold, under pressure as may be required for expediting the cleansing and drying of the clothes in the receptacle —1— during the rotation thereof or while the fluid is being expelled therefrom.

Operation

When it is desired to dry a wet batch of clothes which have been previously washed in the washing machine —A—, the cover —24— is first unlocked by the proper adjust-

ment of the handle —29— after which the cover with the lid —12— thereon is opened about the axis of the pivot —25—.

The clothes which have been previously washed in the washing machine —A— are then withdrawn by hand over and along the shelf —22— and dropped into open upper end of the receptacle until the latter is substantially filled whereupon the cover —24— with the lid thereon is returned to its closed position and locked by the proper adjustment of the handle —29—.

Immediately following this operation the lever —32— will be adjusted rotarily to force the receptacle —1— downwardly into engagement with its driving element —6— which may be rotated by any suitable driving mechanism for imparting rotary motion to the receptacle.

As the receptacle —1— with the wet clothes therein is rotated at a relatively high rate of speed the water therein is expelled by centrifugal force laterally and upwardly along the side walls of the receptacle —1— and outwardly through the passages —15— into the trough —21— from which it is free to escape through the tangential passage —23— into the tub —A— or into any other suitable receptacle during which operation a rinsing fluid or air under pressure may be introduced into the receptacle through the passage —39— and nozzle —40— for expediting the cleansing and drying of the articles in the receptacle.

It is found that the upwardly flaring imperforate walls of the receptacle greatly facilitate the escape of the expelled water over the upper edge thereof and that a thorough drying of the articles may be accomplished in a relatively short period of time leaving said articles in a fluffy condition ready for ironing.

In removing the clothes from the receptacle the handle —32— must be first returned to its starting position to release said receptacle from engagement with its driving element —6— thereby allowing the spring —5— to lift the receptacle and to cause its brake surface —10— to engage the stationary brake member —11— for quickly stopping the rotation of the receptacle.

Immediately following the release of the receptacle from engagement with its driving element the handle —29— may be adjusted to unlock the cover —24— thus permitting said cover with the lid —12— thereon to be fully opened whereupon the practically dry clothes may be removed by hand through the upper open end of the receptacle, the machine being then ready for a repetition of the operations previously described.

I claim:

1. In a centrifugal clothes drier, a rotary driving element, a rotary driven element movable axially into and out of engagement with the driving element, yielding means normally holding the driven element out of engagement with the driving element, a container for the clothes mounted upon the driven element for rotary and axial movement therewith, and means operable at will and movable into and out of engagement with the upper end of the container for moving said container and driven element axially against the action of the yielding means for engaging the driven element with the driving element.

2. In a centrifugal clothes drier, a rotary driving element, a rotary driven element movable axially into and out of engagement with the driving element, yielding means normally holding the driven element out of engagement with the driven element, a container for the clothes mounted upon the driven element for rotary and axial movement therewith, means operable at will and movable into and out of engagement with the upper end of the container for moving said container and driven element axially against the action of the yielding means for engaging the driven element with the driving element, and a relatively stationary brake member frictionally engaged by the driven element when the latter is disengaged from the driving element.

3. In a centrifugal clothes drier, an upright container rotatable about a vertical axis, a rotary support for said container secured to the bottom thereof and provided with an annular flange projecting laterally beyond said bottom, a brake member overlying a portion of the flange, said container and its support being spring-pressed upwardly for normally frictionally engaging the flange with the brake member, means operable at will for depressing the container and its support against the action of said spring, and means for rotating the support with the container thereon when the flange is disengaged from the brake member.

4. In a centrifugal clothes drier, an upright container rotatable about a vertical axis and open at the top, means for rotating said container, a frame surrounding the upper end of the container, a cover hinged to the frame to swing to and from a position across the top of the container, a lid journaled on the cover to move therewith into and out of engagement with the top of the container, means for yieldingly holding the container in frictional engagement with the lid, and means on the cover operable at will for moving the container axially against the action of said yielding means.

5. In a centrifugal clothes drier, an upright clothes receptacle revoluble about a vertical axis, lower and upper journal bearings for said receptacle, a rotary driving element, means for yieldingly supporting the receptacle to permit a limited vertical movement

thereof into and out of engagement with the driving element, and means operable at will for depressing and holding said receptacle in engagement with the driving element against the action of said yielding supporting means.

6. In a centrifugal clothes drier, an upright clothes receptacle revoluble about a vertical axis, a rotary driving element, means for yieldingly supporting the receptacle to permit a limited vertical movement thereof into and out of engagement with the driving element, a lid for the receptacle, and means operatively connected to the lid and operable at will for forcing the receptacle into engagement with the driving element against the action of said yielding means.

7. In a centrifugal clothes drier, an upright clothes receptacle revoluble about a vertical axis, and a driving element therefor, said receptacle being movable into and out of engagement with the driving element in combination with yielding means normally holding the receptacle out of engagement with its driving element, and means supported above the receptacle and operable at will for forcing the receptacle into engagement with said driving element against the action of the yielding means.

8. In a centrifugal clothes drier, an upright clothes receptacle revoluble about a vertical axis, means for rotating said receptacle, a journal bearing for the lower end of the receptacle, a lid for the upper end of the receptacle, a journal bearing for said lid coaxial with the first named bearing, and means operatively connected to the journal bearing and operative at will for moving the receptacle into engagement with its rotating means.

9. In a centrifugal clothes drier, a revoluble upright clothes receptacle and a rotary driving element therefor, in combination with means movable into engagement with the top of the receptacle for moving the receptacle axially into engagement with its driving element.

10. In a centrifugal clothes drier, a rotary clothes receptacle having a limited axial movement, a lid for the receptacle, a support for the lid, a rotary driving element for the receptacle, said receptacle being spring-pressed axially in one direction for disengaging it from the driving element and means on said support operable at will for moving the receptacle axially against the action of said spring into engagement with the driving element.

11. In a centrifugal clothes drier, an upright rotary clothes receptacle having a limited axial movement, a lid for the receptacle, a support for the lid, a rotary driving element for the receptacle, said receptacle being spring-pressed axially in one direction for disengaging it from the driving element, means on the support operable at will for moving the receptacle axially against the action of said spring into engagement with the driving element, and means operable at will for locking and releasing first named means.

12. In a centrifugal clothes drier, a revoluble clothes receptacle, and driving means therefor, said receptacle having a limited axial movement and spring-pressed in one direction for disengaging it from its driving means, a cover movable to and from a position across the open end of the receptacle, means on the cover for moving said receptacle axially against the action of said spring for engaging said receptacle with its driving means, means for locking and releasing the cover in and from its closed position, and means controlled by the cover locking means when in its locking position for preventing the operation of the means for moving the receptacle axially into engagement with the driving means.

13. In a centrifugal clothes drier, a revoluble clothes receptacle and driving means therefor, said receptacle having a limited axial movement into and out of engagement with its driving means, a cover for the receptacle, means operable at will for locking and releasing the cover, means operable at will for moving the receptacle axially into engagement with its driving means, and means controlled by the axial operating means for preventing the release of the cover locking means.

14. In a centrifugal clothes drier, an upright container rotatable about a vertical axis and a journal bearing for the lower end of the container, a cover movable to and from a position across the top of the container, a lid journaled on the cover to move therewith into and out of engagement with the upper end of the container, and means on the cover for forcing the lid into contact with the upper end of the container independently of the movemtnt of the cover.

15. In a centrifugal clothes drier, an upright container rotatable about a vertical axis and a journal bearing for the lower end of the container, a cover movable to and from a position across the top of the container, a lid journaled on the cover to move therewith into and out of engagement with the upper end of the container, and means on the cover for forcing the lid into contact with the upper end of the container independently of the movement of the cover, and means operable at will for locking and releasing the cover in and from its closed position.

16. In a centrifugal clothes drier, an upright container rotatable about a vertical axis and a journal bearing for the lower end of the container, a cover movable to and from a position across the top of the container, a lid journaled on the cover to move therewith

into and out of engagement with the upper end of the container, and means on the cover for forcing the lid into contact with the upper end of the container independently of the movement of the cover, and means operable at will for locking and releasing the cover in and from its closed position, and means actuated by the last named means when adjusted to one position for locking the first named means in one of its adjusted positions.

In witness whereof I have hereunto set my hand this 8th day of April, 1929.

WALTER A. PAPWORTH.