Nov. 1, 1932. A. CHESSIN 1,885,414

GYROSTABILIZER

Filed Dec. 12, 1921 2 Sheets-Sheet 1

Fig.2.

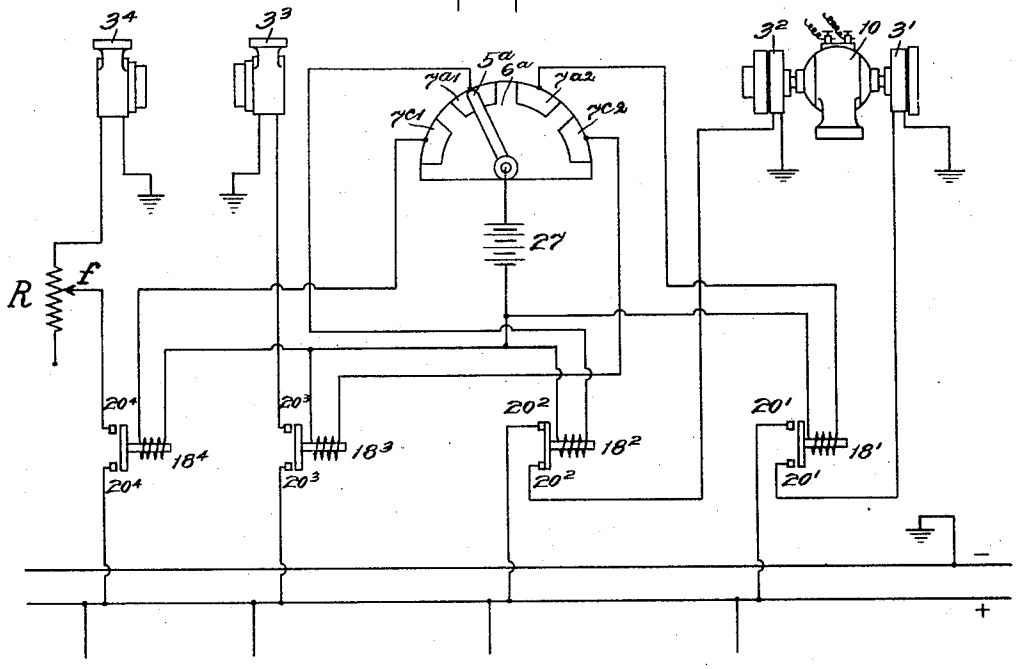

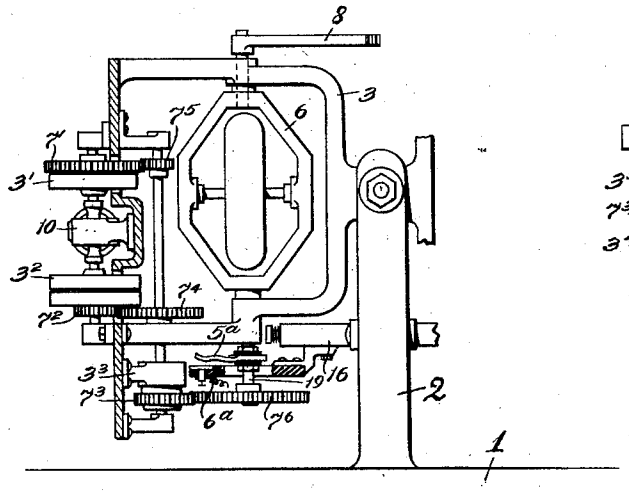

Fig.1.

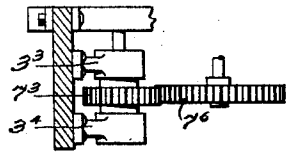

Fig.3.

INVENTOR

Alexander Chessin

Nov. 1, 1932. A. CHESSIN 1,885,414

GYROSTABILIZER

Filed Dec. 12, 1921 2 Sheets-Sheet 2

Fig.4.

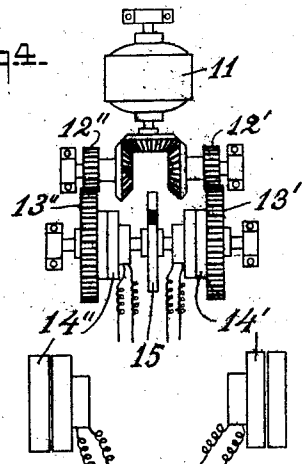

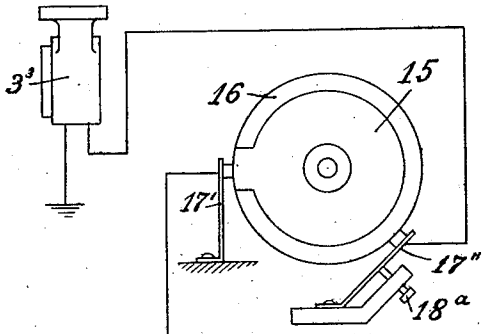

Fig.5.

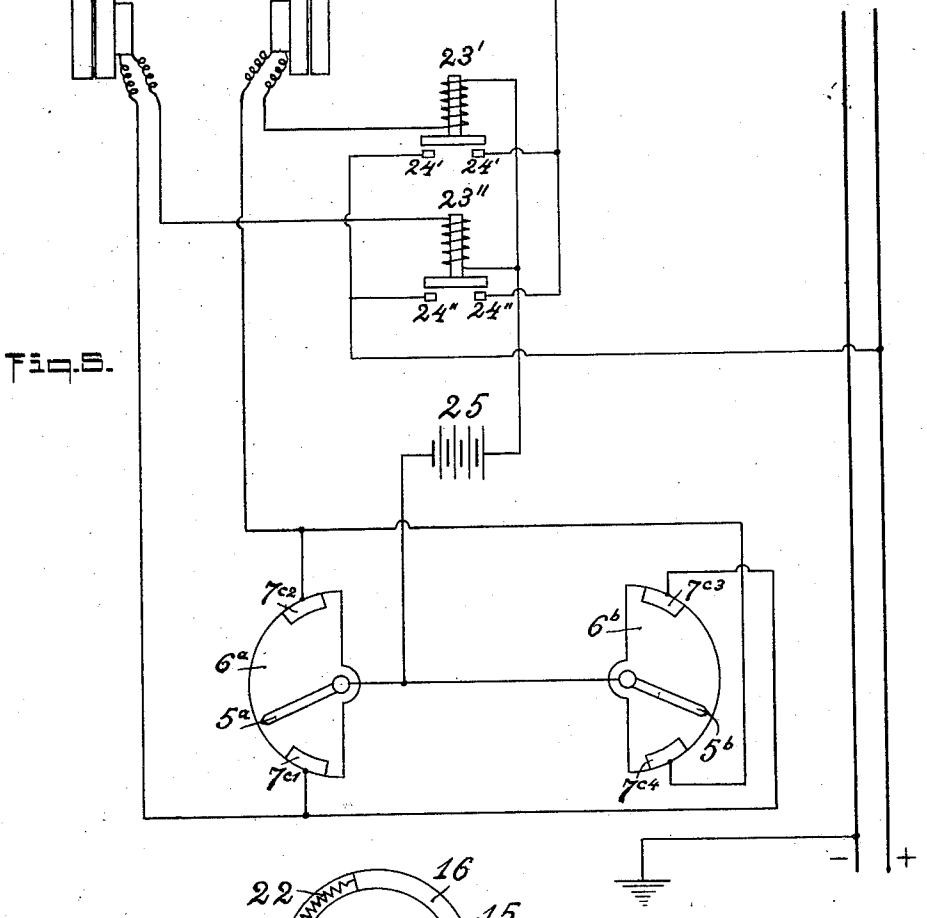

Fig.6.

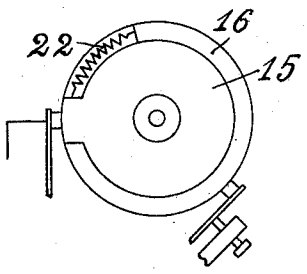

INVENTOR

Alexander Chessin

Patented Nov. 1, 1932

1,885,414

UNITED STATES PATENT OFFICE

ALEXANDER CHESSIN, OF NEW YORK, N. Y.

GYROSTABILIZER

Application filed December 12, 1921. Serial No. 521,929.

My invention relates to the stabilization of bodies which are subject to swinging motion, by means of a gyroscope, and particularly to the stabilization of ships.

The invention is designed to improve the devices of similar nature which are described in my copending applications, Serial #146,-321, Serial #395,865, and U. S. Patent #1,134,439, especially with reference to the locking and braking of the stabilizing gyroscope when the swinging motion of the body on which it is mounted exceeds the limits for which stabilization is effectively secured by the proportions of the apparatus. More particularly, in the aforesaid application Serial #395,865, I have shown a construction whereby the gyroscope may be locked when precession exceeds a predetermined value, while the body swings away from its normal position, and becomes released on the reversal of the swing of the body, after which the gyroscope is allowed to precess back without hindrance, or is made to precess back at a predetermined rate. In the present invention, the gyroscope is re-locked as the body swings back and not released until the body is well on its way back to its normal position. This re-locking, however, may be effected in a manner which is different from the locking on the outward swing of the body, namely, it may be for a longer, or shorter interval of time, or it may be replaced by a brake which retards the return precession, or both operations, during the swing outward and back of the body, may be braking operations instead of locking, with suitable difference in the braking powers of the two operations. Various results are obtained by this improvement, such as, for instance, an additional control of the return precession, besides that secured by the regulation of its speed, and, in general, various means for adjusting and regulating the coefficient of damping which figures in all of the devices here referred to and shown in the aforesaid patent and copending applications, this damping having reference to the series of stabilizing torques impressed on the swinging body by the gyroscope. Another important result secured by this invention lies in the character of the control whereby the gyroscope is brought back to its normal position automatically upon the return of the body to its normal position, and without any special centralizing means. Further novel and useful features of my invention will appear from the detailed description thereof which follows.

Figure 1 is a front elevation of my stabilizing apparatus and is identical with Figure 6 shown in my copending application Serial No. 395,865, even to the reference letters and numbers thereon. The apparatus being symmetrical, only one half of it is illustrated.

Figure 2 is a diagram of the electrical connections which control the operation of my stabilizing apparatus shown in Figure 1, in conjunction with the additional element shown in Figure 3.

Figure 3 is a portion of my stabilizing apparatus showing a modification of the type illustrated in Figure 1.

Figure 4 is a controlling mechanism used in connection with the type of apparatus shown in Figure 1.

Figure 5 is a diagram of the electrical connections which control the operation of the type illustrated in Figure 1.

Figure 6 is a variation of one of the elements in the controlling mechanism shown in Figure 4.

Referring particularly to Figure 1, the body to be stabilized is indicated by 1. To this body 1 is attached a support 2, on which is mounted for limited oscillation relatively thereto a frame 3, wherein is pivoted the gyroscope bearing frame 6. A second gyroscope, not shown in the figure, is mounted in similar fashion on the other side of the support 2, the axles of the two gyroscope bearing frames 6 being connected by means of toothed sectors 8 in the familiar manner, to give the two gyroscopes opposite precession, the gyroscopes themselves spinning in opposite directions. When the frame 3 swings relatively to the support 2, it is adapted to come in contact with yielding members 16, the latter being attached to the support 2. The frame 3 carries three electro-magnetic clutches $3'$, 3^2, and 3^3, the first two being driven by the motor 10, and the third being stationary.

When these clutches are energized, they act respectively to drive the gears 7′ or 7^2, or to lock the gear 7^3. According as the clutch 3′ or 3^2 is energized, the gear train 7′—7^5—7^3—7^6, or the gear train 7^2—7^4—7^3—7^6, becomes operative, the gear 7^6 being mounted on the axle 19 of the gyroscope bearing frame 6, which turns with the gear 7^6. On the axle 19 is mounted a member 5^a electrically insulated from it and adapted to form an electrical contact with a member 6^a carried by the support or yielding member 16 and bearing four conductive plates 7^{a1}, 7^{a2}, 7^{c1}, 7^{c2}, insulated from the member 6^a and from one another.

The modification of this apparatus, shown partially in Figure 3, consists in the feature of having two stationary clutches 3^3 and 3^4 instead of the single clutch 3^3 in the type shown in Figure 1, the apparatus being otherwise identical.

Referring now to Figure 2, it must be taken in conjunction with Figures 1 and 3, being a diagram of operation for the type of apparatus which includes the feature of two stationary clutches. When the rotating member 5^a makes contact with the plate 7^{a1}, the circuit 5^a—7^{a1}, including the battery 27, is closed, energizing the electro-magnet 18^2, whereby contact is made at 20^2, the latter contact closing the circuit of the main line (+,—) with the clutch 3^2, energizing this clutch. Likewise, when the member 5^a is in contact with the plate 7^{a2}, the circuit 5^a—7^{a2}, through the battery 27, will energize the electro-magnet 18′ and close the circuit of the main line with the clutch 3′; when the member 5^a is in contact with the plate 7^{c1}, the closing of the circuit through the battery 27 will energize the electro-magnet 18^4 and close the circuit of the main line with the stop-clutch or brake 3^4; finally, when the member 5^a is in contact with the plate 7^{c2}, the closing of the circuit through the battery 27 will energize the electro-magnet 18^3 and close the circuit of the main line with the brake 3^3, a variable resistance R being inserted in the latter circuit, the amount of resistance being controlled by the position of the arrow *f*.

Referring to Figure 4, the gear trains 12′—13′ and 12″—13″ are driven by the motor 11, through a system of bevel gears which give the two aforesaid gear trains opposite movements. The ratio of the gears in each gear train is preferably different, so that the rotations of the gears 13′ and 13″ are not only in reverse directions, but at different speeds. On the axle of the two gears 13′ and 13″ is mounted a wheel 15, and according as the electro-magnetic clutch 14′ or 14″ is energized, the wheel 15 will rotate in one, or in the opposite direction, at the respective speeds of the corresponding gears 13′ and 13″. This wheel 15, as is shown in Figure 5, is made of insulating material, except for a strip 16 around its circumference which is made of electro-conductive material. The strip 15 does not completely surround the circumference of the wheel 15. Two contact brushes 17′ and 17″ are shown on this figure, one of them, 17″ being pressed against the circumference of the wheel by means of an adjustable screw member 18^a. In the position shown, the brush 17′ is in contact with the insulated portion of the circumference of the wheel 15.

Referring further to Figure 5, the plate 6^a and member 5^a correspond to one half of the stabilizing apparatus, viz., the half illustrated in Figure 1, while 5^b and 6^b are the corresponding elements of the other half of this apparatus, disposed symmetrically to the half shown in Figure 1. Each plate or member 6^a, 6^b, carries four conductive sections similar to those shown in diagram Figure 2, but only the sections 7^{c1}, 7^{c2}, 7^{c3}, 7^{c4}, are shown here. When the rotating member 5^a makes contact with the conductive section 7^{c1}, the circuit 5^a, battery 25, electro-magnet 23″ and clutch 14″, is closed, and the wheel 15 is rotated in one direction with the speed of the gear 13″. As soon as the rotation of the wheel 15 brings the conductive strip 16 in contact with the brush 17′, the circuit of the main line (+,—) and electro-magnetic clutch 3^3 will be closed, because the magnetization of 23″ brings with it the closing of the contacts 24″. As will be seen later, the next step in the controlling operation will be a contact of the member 5^b and section 7^{c4}. This will close the circuit through the battery 25 and electro-magnet 23′ with the clutch 14′, and as a result, the wheel 15 will start rotating back, with the speed of the gear 13′, at the same time that the circuit of the main line is closed with the electro-magnetic clutch 3^3, owing to the closing of the contacts 24′. As soon as the wheel 15 comes back to the position from which it started its rotation, the contact of the brush 17′ will be broken and the clutch 3^3 de-energized. The modus operandi is similar when the rotating member 5^a makes contact with the section 7^{c2} first, and 5^b with the section 7^{c3} next.

Referring in particular to Figure 6, this is a variation of the element 15, a resistance 22 being inserted in the strip 16.

The operation of my apparatus will now be briefly explained, first with regard to the type including the element shown in Figure 3, i. e. the double stop-clutch or brake mechanism, and next, the type with the single stop mechanism but with the controlling mechanism shown in Figures 4, 5 and 6.

Suppose that the body which the apparatus is intended to stabilize begins a swinging motion away from its normal position. The frame 3 will come in contact with the yielding member 16, and at the same time the rotating member 5^a will come in contact with the sectional plate 7^{a2}. As a result, the clutch 3′ will

be energized, and the driving force of the motor 10 will be transmitted through the gear train $7'$—7^5—7^3—7^6 to the pair of coupled frames 6 (of which only one is shown on Figure 1), causing a precession of the gyroscopes at a predetermined speed. If the stabilizing effect thus produced on the swinging body is sufficient to overcome the forces which have caused the swinging motion of the body, the body will swing back towards its normal position, ordinarily pass this position, and swing to the other side thereof, when the contact of the brush 5^b with the sectional plate on 6^b corresponding to the plate 7^{a2} will cause precession of the gyroscopes in opposite direction at another predetermined speed, effecting a corresponding stabilizing torque on the body to bring it back to its normal position. All this is in accordance with the construction and operation of this apparatus already described in the above mentioned application Serial #395,865. What must be here considered is the function of the apparatus when the stabilizing torque effected by the precession of the gyroscopes is not sufficient to overcome the forces which caused the deviation of the body from its normal position. In that case, the brush 5^a will move beyond the plate 7^{a2}, and when it reaches the plate 7^{c2}, it will cause the clutch 3^3 to be energized and lock the gyroscopes to the frame 3. This locking condition of the gyroscopes will continue as long as the body continues to swing in the same direction, but as soon as the swinging motion of the body is reversed, the brush 5^a will become detached from the member 6^a and the gyroscopes will be automatically released from their locked condition, the clutch 3^3 being de-energized by the break of contact between 5^a and 7^{c2}. While the body is changing the direction of swing, the gyroscopes, being in possession of three degrees of rotational freedom, have no effect on the body, but as soon as the body starts on its return swing, the brush 5^b will come in contact with the plate 7^{c3} and again cause the gyroscopes to be locked, by energizing the clutch 3^4. On the diagram of Figure 2, the operation during a return swing is illustrated for the position of the body when the brush 5^a is in contact with the sectional plate 7^{c1}. As the speed of the return swing of the body increases, increased precessional forces develop in the gyroscopes, acting to break the lock of clutch 3^4. By proper regulation of the resistance R in the circuit which energizes the clutch 3^4, it is possible to permit such release of the clutch to take place at a predetermined interval after the return swing began, or at a predetermined position of the body during its return swing. For instance, the gyroscopes may remain locked until the body reaches the same position as that at which the gyroscopes were locked on the outward swing of the body. In this manner, another object of my invention is attained, namely, the return precession of the gyroscopes may be delayed, or hastened, independently of the retardation or acceleration of precession provided for by the precession creating means.

Clearly, the same arrangement of the apparatus may be used when the locking clutches are replaced by brakes. The only difference in the operation would be that instead of locking the gyroscopes when the swing of the body exceeds a predetermined limit, the gyroscopes are gradually restrained in their precession by the action of the brake mechanism. In this modification of my device, the braking forces of the two clutches 3^3 and 3^4 may be the same, or, preferably, different. Another variation of my device is obtained by using one of the clutches as a lock, and the other as a brake.

In order to simplify the drawings, the clutches are shown on one side of the apparatus as illustrated on Figures 1 and 3, thus indicating the existence of a duplicate set of such clutches for the other half of the apparatus. It is obvious, however, that the same set of clutches can be made to exercise their functions for both sides of the apparatus. In so far as the diagram of Figure 2 is concerned, it would be only necessary to rearrange the circuits in a manner similar to that indicated in Figure 5. As to the actual disposition of the clutches or brakes, one could be mounted on one side, and the other, on the other side of the apparatus relatively to the support 2. Indeed, the number of lock-clutches or brakes may be even reduced to one, by a further re-arrangement of the various circuits, and a single, reversible speed, motor may be used instead of two motors 10, without in any way changing the general character, or the principle, of operation as here described. Such modifications of the operating details are too well known in the art to deserve more than a passing mention here.

We will now describe the operation of the controlling device shown in Figures 4–6. Suppose, for instance, that an excessive swing of the body has caused the gyroscopes to precess so far that the rotating brush 5^a has come in contact with the plate 7^{c2}. As was explained above, this will start the wheel 15 rotating in a certain direction. Until the brush $17'$ has come in contact with the strip 16, the gyroscopes remain unlocked and the brush 5^a continues its movement. The moment the strip 16 has come in contact with the brush $17'$, the clutch 3^3 is energized, and the gyroscopes are locked. While the body proceeds on its outward swing, the wheel 15 continues its rotation, but the moment the outward swing of the body stops and the body starts on its return swing, the brush 5^a breaks contact with the plate 7^{c2}, the brush 5^b makes contact with the plate 7^{c3}, and the wheel 15

reverses its rotation at a speed which depends on the ratio of the gear trains 12′—13′ and 12″—13″. For the sake of illustration, let us assume that these gear trains have the same ratio. Then, it is clear that the reverse motion of the wheel 15 will be of the same duration as its direct motion. Accordingly, the time interval during which the gyroscopes are locked on the return swing of the body is equal to the time interval during which the gyroscopes were locked on the outward swing, i. e. the gyroscopes are released at the expiration of a definite time interval after they have become locked. The device, therefore, comes squarely within the definition of a time lock, as given by all standard dictionaries, i. e. a lock which is released at the expiration of a definite time interval after the lock has been effected. In the mean time, the brush 5^b will continue its contact with the plate 7^{c3} for a brief period, during which the wheel 15 completes its return to the position from which it started. By including a resistance 22 in the strip 16 of the wheel 15, the energizing process of the clutch 3^3 will be gradual, so that it will, in effect, act as a brake, rather than a lock, although it may become a lock at some stage of the energizing process, namely when the brush 17′ comes in contact with the portion of the strip 16 beyond the resistance 22. It is clear from this construction that the braking effect increases with the deviation of the body from its normal position, and decreases as this deviation decreases. It is also clear that when the gears 13′ and 13″ rotate at different speeds, the rate of the aforesaid variation of braking power will differ according as the body swings away from, or towards, its normal position.

The object of the pressure screw 18^a is to effect the immediate stopping of the wheel 15 when the driving force of the gears 13′ and 13″ ceases to act upon the wheel. Of course, any suitable form of friction or equivalent brake may be used in place of the form indicated in Figure 5.

The stabilizing apparatus described in this specification is endowed with a feature of self control which some gyroscopic stabilizers do not possess. In such other gyroscopic stabilizers, it is necessary to provide a separate control device, and this has been done in some instances in the form of a separate, generally much smaller, control gyroscope. It is obvious that the time lock control described in this specification is equally applicable to such a control gyroscope, and I do not limit myself to the type of self-controlling gyroscopes illustrated in this specification. In general while I have shown and described, and pointed out in the annexed claims, certain novel features of my invention various changes, omissions or substitutions in the form and details of the device as illustrated and its operation, may be made by those skilled in the art, without departing from the spirit of my invention.

Having thus described my invention, I claim:

1. In a body subject to swinging motion, a gyroscope mounted thereon for precession, means for locking said gyroscope against precession, a non-pendulous timing device responsive to the swinging motion of said body, and means, controlled by said timing device, for releasing said gyroscope.

2. In a body subject to a swinging motion, a stabilizing gyroscope therefor, means for rendering said gyroscope inoperative during the extreme stages of an excessive swing of said body, and means for varying the relative lengths of the outward and the return sections of swing during which said gyroscope is inoperative.

3. In a body subject to swinging motion, a gyroscope mounted thereon for precession, means, responsive to said precession, for locking said gyroscope during the extreme stage of an outward swing, and means for retarding the return precession of said gyroscope during a portion of the return swing of said body.

4. In a body subject to angular deviations, a gyroscope, a time lock on said gyroscope, and means whereby said time lock is controlled by said angular deviations.

5. In a body subject to angular deviations, a gyroscope, a time lock on said gyroscope, and means whereby said time lock is made operative by excessive deviation of said body.

6. A gyroscope, and a time lock on said gyroscope brought into action when precession of said gyroscope exceeds a predetermined limit.

7. A gyroscope, means for locking and for releasing said gyroscope, a controller for said means, and means for automatically starting said controller upon locking of said gyroscope and returning said controller to its starting point upon releasing of said gyroscope.

8. In a body subject to oscillation, a stabilizing gyroscope therefor, and means for limiting the operativeness of said gyroscope to periods when said body is at, or near, its normal position, said periods being capable of relative adjustment according as the body oscillates away from, or toward, its normal position.

9. In a body subject to swinging motion, a gyroscope mounted thereon for precession, means, responsive to precession beyond a predetermined limit, for locking said gyroscope against precession during a portion of the outward swing of said body, and means for braking said gyroscope about the precession axis during a portion of the return swing of said body.

10. In a swinging body, a gyroscope, means for locking said gyroscope during a portion of an outward swing of said body, and means,

responsive to reversal of swing of said body, for locking said gyroscope during the return swing of said body for a period of time having a predetermined ratio to the period of time said gyroscope was locked during said outward swing.

11. In a body subject to oscillation, a gyroscope, means for locking and for releasing said gyroscope, a controller for said means, and means, responsive to the oscillation of said body, for automatically reversing the action of said controller.

12. In a swinging body, the combination with a gyroscope and precession producing means therefor, of limit devices for rendering said precession producing means inoperative during intervals of outward and of return swings of said body, said intervals having a predetermined ratio.

13. In a swinging body, a gyroscope mounted thereon for precession, means, responsive to precession beyond a predetermined limit, for braking said gyroscope about the precession axis during an outward swing of said body, and means for braking said gyroscope about said axis in response to reversal of swing of said body, the braking powers of said two means having a predetermined ratio.

14. In a swinging body, a gyroscope mounted thereon for precession, means for braking said gyroscope about the precession axis in responsive to an excessive swing of said body, and means for varying the power of said braking means, according as said body is swinging away from, or toward, its normal position.

15. In a body subject to angular deviation from a normal position, a gyroscope adapted to precess, means for braking said gyroscope about the precession axis, and means for increasing or decreasing the power of said braking means according as said deviation of the body increases or decreases, the respective rates of increase and of decrease of said power being capable of different adjustment.

16. In a body subject to swinging motion, a stabilizing gyroscope therefor, means for rendering said gyroscope inoperative upon its having precessed through a predetermined angle during the outward swing of said body, and means for restoring the operativeness of said gyroscope after the swinging motion of said body is reversed, the time interval from the moment of rendering said gyroscope inoperative to the moment of reversal of swing of said body, and the time interval from said moment of reversal of swing to the moment of restoring the operativeness of said gyroscope, having a predetermined ratio.

17. In a swinging body, a gyroscope mounted thereon for precession, means, responsive to precession beyond a predetermined limit, for locking said gyroscope and maintaining it locked until the end of an outward swing of said body, when the gyroscope is automatically released, means for re-locking said gyroscope as the swinging motion of said body is reversed, and means for releasing said gyroscope during the return swing of said body.

18. In a swinging body, a stabilizing gyroscope therefor, means for rendering said gyroscope inoperative while said body swings away from its normal position, and means for restoring the operativeness of said gyroscope when said body returns to substantially the same position as that at which said gyroscope was rendered inoperative.

19. In a swinging body, a gyroscope, means for producing precession of said gyroscope as the body swings away from its normal position, and independent means for automatically retarding the return precession of said gyroscope.

20. In a swinging body, a gyroscope mounted thereon for precession, means for locking said gyroscope against precession, means for releasing and for relocking said gyroscope as the swinging motion of said body is reversed, which means render said gyroscope inoperative during the interval between said releasing and said relocking.

21. In a swinging body, a frame mounted thereon for limited movement relatively thereto, a gyroscope rotatably mounted on said frame, means for locking said gyroscope to said frame, and means, responsive to the relative movement of said body and said frame, for releasing said gyroscope and for relocking it to said frame in the same position relatively thereto.

22. In a swinging body, a frame mounted thereon for limited movement relatively thereto, a gyroscope rotatably mounted on said frame, a member attached to said body, a co-operating member carried by said frame, said two members being disposed on one side of said gyroscope and forming the elements of a circuit closer, a second set of similar members symmetrically disposed with regard to the first set, on the other side of said gyroscope, and forming the elements of a second circuit closer, a mechanism adapted to lock said gyroscope on said frame, a timing device controlled by said circuit closers, and means, controlled by said timing device, for energizing said lock mechanism or rendering it inoperative.

23. In a swinging body, a frame mounted thereon for limited movement relatively thereto, a gyroscope mounted on said frame for precession, a member rigidly connected with said body, a co-operating member carried by said frame, said two members being disposed on one side of said gyroscope and forming the elements of a circuit closer, a second set of similar members disposed on said body and on said frame, on the other

side of said gyroscope and symmetrically with regard to the first set of said members, said second set of members forming the elements of a second circuit closer, means, controlled by said first circuit closer, for locking said gyroscope against precession, and means, controlled by said second circuit closer, for braking said gyroscope about the precession axis.

24. In an oscillating body, a gyroscope mounted thereon for precession, means for restraining said gyroscope about the precession axis, a time lock responsive to the oscillation of said body, and means, co-operating with said time lock, for controlling said restraining means.

25. In a swinging body, a frame mounted thereon for limited movement relatively thereto, a gyroscope mounted on said frame for precession, means, responsive to precession beyond a predetermined limit, for locking said gyroscope to said frame, means for braking said gyroscope about the precession axis, means, responsive to the relative movement between said body and said frame, for releasing said gyroscope and for applying said braking means thereto, and means for varying the power of said braking means.

26. A gyroscope adapted to precess about an axis, a timing device brought into action when said precession exceeds a predetermined limit, means for restraining said gyroscope about the precession axis, and means, co-operating with said timing device, for controlling said restraining means.

27. In a swinging body, a frame mounted thereon for limited movement relatively thereto, a pair of gyroscopes mounted on said frame, said gyroscopes spinning in opposite direction and being coupled for opposite precession, members carried by said frame and rotatable in unison with the precession of said gyroscopes, stationary members attached to said body, said rotatable and said stationary members forming elements of a system of circuit closers, a multiple speed transmission to the precession axles of said gyroscopes, driving members carried by said frame and forming part of said multiple speed transmission, a multiple clutch mechanism, said driving members being controlled by said multiple clutch mechanism, means for actuating said driving members, means for locking said gyroscopes to said frame, a brake mechanism carried by said frame and adapted to brake said gyroscopes about their precession axes, and means, controlled by said system of circuit closers, for energizing said multiple clutch mechanism, said locking means, or said brake mechanism.

28. A stabilizing apparatus, comprising a support, a frame mounted on said support for limited movement relatively thereto, a pair of gyroscopes mounted on said frame for precession in opposite direction to one another, the gyroscopes spinning in opposite senses, stationary members attached to said support, members carried by said frame and rotatable with respect thereto in unison with the precession of said gyroscopes, said stationary and said rotatable members forming elements of a system of circuit closers, a multiple speed transmission to the precession axles of said gyroscopes, driving members carried by said frame and forming part of said multiple speed transmission, a multiple clutch mechanism, said driving members being controlled by said multiple clutch mechanism, means for actuating said driving members, means, controlled by the relative movement of said support and said frame, for locking and for releasing said gyroscopes, additional control means for said locking means, comprising an automatic timing device, and means, controlled by said system of circuit closers for actuating said double clutch mechanism or said locking means and automatic timing device.

29. The combination with a gyroscope, of an automatic controller therefor comprising a movable member, means, responsive to precession of said gyroscope beyond a predetermined limit, for setting said member in motion at a uniform speed, and means for reversing said motion and returning said member to its original position at a speed having a predetermined ratio to said uniform speed.

30. The combination with a gyroscope, of an automatic timing device comprising a movable member, said member forming one element of a circuit closer, a stationary co-operating member forming the other element of said circuit closer, means, controlled by said circuit closer, for locking and for releasing said gyroscope, means, responsive to precession of said gyroscope beyond a predetermined limit, for setting said movable member in motion, and means for reversing said motion and automatically returning said movable member to its original position upon the release of said gyroscope.

31. The combination with a gyroscope, of an automatic control device comprising a movable member, said movable member forming one element of a circuit closer, a stationary member forming the other element of said circuit closer, means, responsive to precession of said gyroscope, for setting said movable member in motion, means for automatically reversing said motion, means, controlled by said circuit closer, for braking said gyroscope about the precession axis, and means, responsive to the motion of said movable member, for varying the power of said braking means.

32. In a body subject to angular deviations, a gyroscope mounted thereon for precession, means for governing the precession of said gyroscope, a controller for said means responsive to the deviation of said body, and

a non-pendulous timing device co-operating with said controller.

33. The combination with a gyroscope adapted to precess, of means for governing the precession of said gyroscope, a limit device therefor responsive to precession beyond a predetermined angle, and a time lock co-operating with said limit device.

34. In a swinging body, a gyroscope mounted for precession, means for governing said precession, including a limit device for rendering said means inoperative, and an automatic non-pendulous timing device, responsive to the swinging motion of said body, for controlling said limit device.

35. The combination with a gyroscope mounted for precession, of an automatic time lock brought into action by the precession of said gyroscope beyond a predetermined limit.

36. In a swinging body, a gyroscope mounted for precession, means for locking said gyroscope against precession, a timing device set as to operating time by the outward swing of said body, and means, controlled by said timing device, for releasing said gyroscope.

37. In a swinging body, a gyroscope mounted for precession, means for governing the precession of said gyroscope, a controller for said means responsive to the swing of said body, and a timing device set as to operating time by the outward swing of said body and co-operating with said controller.

38. In a swinging body, a gyroscope mounted for precession, means for governing said precession, including a limit device for rendering said means inoperative, and a timing device set as to operating time by the outward swing of said body, for controlling said limit device.

39. In a swinging body, a gyroscope, and a time lock on said gyroscope set as to operating time by the outward swing of said body.

40. In a swinging body, a gyroscope mounted for precession, and a time lock on said gyroscope set as to operating time by the outward swing of said body after the precession of said gyroscope reaches a predetermined value.

41. In a body subject to a swinging motion, a stabilizing gyroscope therefor, means for rendering said gyroscope inoperative during the extreme stages of an excessive swing of said body, and means for varying the absolute and the relative lengths of the outward and the return sections of swing during which said gyroscope is inoperative.

42. In a body subject to oscillation, a stabilizing gyroscope therefor, means for limiting the operativeness of said gyroscope to periods when said body is at or near its normal position, means for varying that part of the aforesaid periods which corresponds to oscillation of the body away from its normal position, and means for adjusting the part of the aforesaid periods which corresponds to oscillation toward normal position relatively to said first mentioned part.

43. The combination with a gyroscope of means for locking said gyroscope against precession, means for effecting release of the gyroscope, and means for regulating the time interval prior to said release.

44. In a body subject to swinging motion, a gyroscope mounted thereon for precession, means, responsive to an excessive outward swing of said body, for locking said gyroscope against precession during the extreme stage of said outward swing, and means for retarding the return precession of said gyroscope, which latter means operate first as a lock and then as a brake.

45. In a body subject to a swinging motion, a gyroscope mounted thereon for precession, means for locking said gyroscope against precession during the extreme period of an outward swing of said body, means for regulating the return precession of said gyroscope, which latter means comprises a locking stage and a braking stage, and means for regulating the passage from one to the other of said two stages.

46. A gyroscope, means for controlling the precession of said gyroscope, which means comprise a locking stage and a braking stage, and means for regulating the passage from one to the other of said two stages.

47. The combination with a gyroscope, of a control device comprising a circuit closer, means controlled by said circuit closer for braking said gyroscope about the precession axis, means for varying the power of said braking means, and means for varying the rate of variation of said braking means.

48. In a swinging body, a gyroscope mounted thereon for precession, means responsive to precession beyond a predetermined limit for locking said gyroscope and maintaining it locked until the end of an outward swing of said body, when the gyroscope is automatically released, means for relocking said gyroscope as the swinging motion of said body is reversed, and means for releasing said gyroscope at a predetermined interval after said swinging motion of said body is reversed.

49. In a swinging body, a gyroscope, means responsive to the precession of said gyroscope beyond a predetermined limit for locking said gyroscope, means for mounting said gyroscope so that it becomes released at the end of an outward swing of said body, means for relocking said gyroscope as the swinging motion of said body is reversed, and means for releasing said gyroscope after a predetermined interval during the reversal of said swinging motion.

50. In a swinging body, the combination

with a gyroscope adapted to precess as said body swings, of a controller therefor comprising a movable member, means responsive to the precession of said gyroscope for setting said member in motion, and means for reversing said motion as the swing of said body is reversed.

51. In a swinging body, the combination with a gyroscope adapted to precess as said body swings, of an automatic controller therefor comprising a movable member, means responsive to precession of said gyroscope beyond a predetermined limit for setting said member in motion at a uniform speed, and means for reversing said motion as the swing of said body is reversed and returning said member to its original position at a speed having a predetermined ratio to said uniform speed.

52. The combination with a gyroscope, of a timing device comprising a movable member, and means responsive to precession of said gyroscope for setting said member in motion.

53. The combination with a gyroscope, of an automatic controller therefor comprising a movable member, and means, responsive to precession of said gyroscope beyond a predetermined limit for setting said member in motion.

54. In a swinging body, the combination with a gyroscope adapted to precess as said body swings, of an automatic timing device comprising a movable member, said member forming one element of a circuit closer, a stationary cooperating member forming the other element of said circuit closer, means controlled by said circuit closer for locking and for releasing said gyroscope, means responsive to precession of said gyroscope beyond a predetermined limit for setting said movable member in motion, and means for reversing said motion as the swing of said body is reversed and returning said movable member to its original position upon the release of said gyroscope.

55. In a swinging body, the combination with a gyroscope adapted to precess as said body swings, of a controlling device comprising a movable member, said movable member forming one element of a circuit closer, a stationary member forming the other element of said circuit closer, means responsive to precession of said gyroscope for setting said movable member in motion, means for reversing said motion as the swing of said body is reversed, means controlled by said circuit closer for braking said gyroscope about the precession axis, and means responsive to the motion of said movable member for varying the power of said braking means.

56. In a swinging body, a gyroscope one of the three degrees of rotational freedom whereof is limited, said gyroscope being adapted to become operative to stabilize said body when the limit of said limited degree of freedom is reached, means for rendering said gyroscope inoperative while said body swings away from its normal position, and means for restoring the operativeness of said gyroscope when said body returns to substantially the same position as that at which said gyroscope was rendered inoperative.

57. In a body subject to angular deviations, a gyroscope, a time lock therefor, and means responsive to an excessive deviation of said body for setting the time element of said lock.

ALEXANDER CHESSIN.