Jan. 13, 1931. O. GAEDKE 1,788,996

APPARATUS FOR EVALUATING FUNCTIONS OF TWO INDEPENDENT VARIABLES

Filed Jan. 29, 1929 2 Sheets-Sheet 1

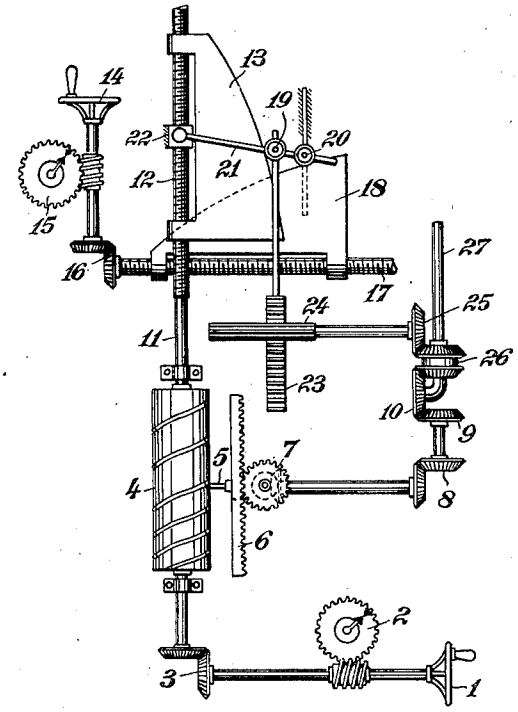

Fig. 1

Fig. 3

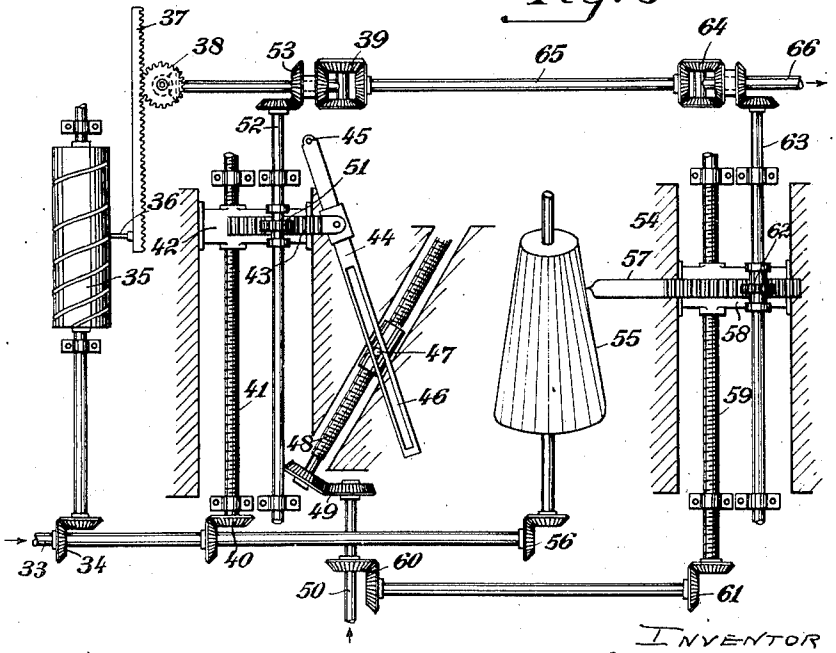

INVENTOR
OTTO GAEDKE
BY
Lotka, Kehlenbeck & Farley
ATTORNEYS.

Jan. 13, 1931. O. GAEDKE 1,788,996

APPARATUS FOR EVALUATING FUNCTIONS OF TWO INDEPENDENT VARIABLES

Filed Jan. 29, 1929 2 Sheets-Sheet 2

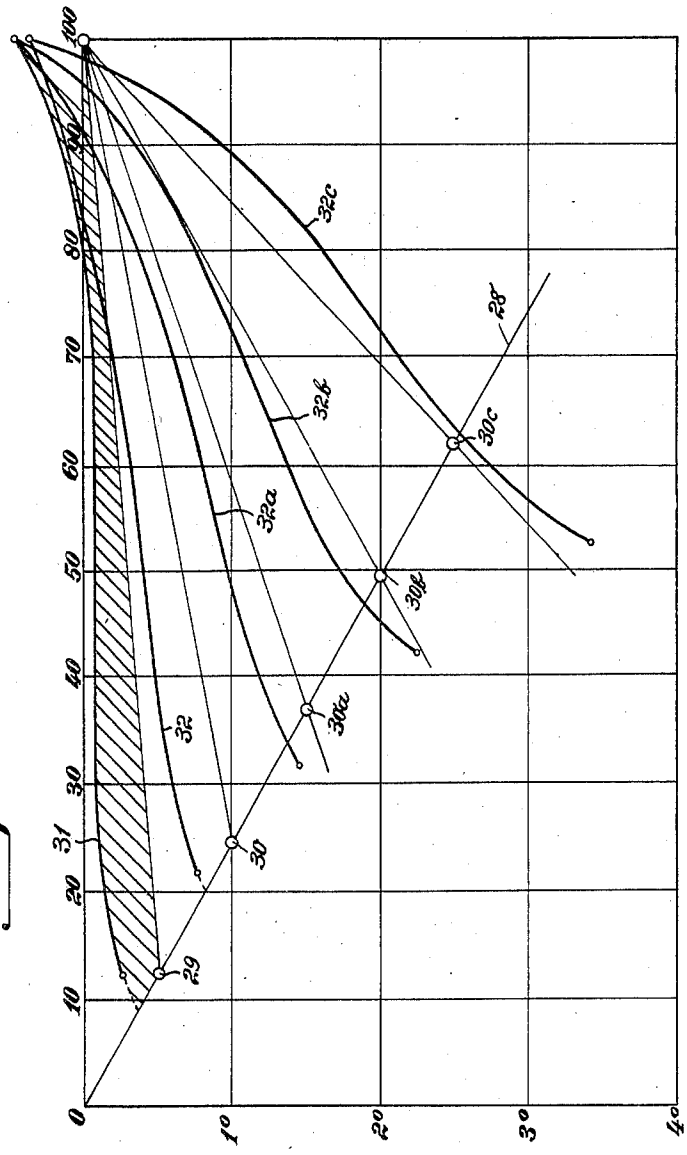

Fig. 2

INVENTOR
OTTO GAEDKE
BY
Lorka, Kehlenbeck & Farley
ATTORNEYS.

Patented Jan. 13, 1931 1,788,996

UNITED STATES PATENT OFFICE

OTTO GAEDKE, OF HENGELO, NETHERLANDS, ASSIGNOR TO GESELLSCHAFT FUER ELEKTRISCHE APPARATE M. B. H., OF MARIENFELDE, NEAR BERLIN, GERMANY, A CORPORATION OF GERMANY

APPARATUS FOR EVALUATING FUNCTIONS OF TWO INDEPENDENT VARIABLES

Application filed January 29, 1929, Serial No. 335,947, and in Germany December 22, 1927.

The invention relates to improvements in apparatus for evaluating functions of two independent variables.

As such range-table functions there come into consideration mainly the time of flight of the projectile T, the timing of the fuze of the projectile t and the elevation of the gun ω, but the twist of the gun, the density of the air and the wind, which result when firing at targets located outside the horizontal plane, such as air targets are also of importance. The two variables are the distance e and the height h of the target, i. e. its vertical distance from the horizontal plane, so that these functions may be expressed mathematically by:

$$T=F\ (e, h)\,;\ t=f\ (e, h) \text{ and } \omega=\phi\ (e, h)$$

Instead of the variables e and h may also be introduced the trigonometric functions of the angle under which the target appears, in the case of air targets, for instance, the ground angle. As well known these three values are contained in a rectangular triangle, which is formed by projecting the distance of the object upon the horizontal plane. These variables may directly be determined by measurement. It is, however, difficult to determine as a function of two of them the time of flight of the projectile, the timing of the fuze of the projectile or the elevation of a gun.

Although there is a possibility of determining these values by the aid of the range-table, this procedure involves a great loss of time, and is rather complicated and liable to lead to reading errors. It has therefore been attempted to determine these functions automatically by mechanical means and a kind of relief reproduction has, for instance, been employed for this purpose. This presents, however, considerable difficulties in production and is very inaccurate, if it is not desired to employ inconveniently large dimensions. It is also known to effect the evaluation of such functions by graphical means, but this method requires much time, which is as a rule not available for gunnery purposes and particularly not when firing at air targets

The object of the invention is to avoid the drawbacks of the known apparatus. It is based upon the fact ascertained by numerous investigations of range-tables and study of firing results, that the functions in question may be represented mathematically as the sum of two factors, of which the first represents a function of the one variable for the value 0 of the other variable, while the second factor of this sum forms the product of two functions of one of each of the two variables. The timing t of the fuze of the projectile may thus, for instance, be represented as follows

$$t\ (e, h)=t\ (e)\underset{h=0}{}+f\ (e)\ \cdot g\ (h).$$

Corresponding mathematical expressions result for the elevation and for the time of flight of the projectile. This mathematical dependence may be reduced to practice by the aid of comparatively simple cam drives operating with great accuracy.

According to the invention two curve drives are employed one of which is shaped according to a function of the one variable for the value 0 of the second variable, while the second curve drive determines the product of a function of the first variable and a function of the second variable.

In the drawings affixed hereto and forming part of the specification two embodiments of the invention are illustrated by way of example.

In the drawings

Fig. 1 shows one embodiment of the invention in diagrammatic representation,

Fig. 2 shows a graph for explaining a simplified construction of the invention, and

Fig. 3 shows a simplified embodiment of the invention constructed according to Fig. 2.

Referring to Fig. 1 of the drawings 1 is a handle, which is turned to adjust on an indicating device 2 continuously or intermittently a distance value. This adjustment is transmitted to a curve cylinder 4 by the bevel wheels 3. The curve engraved upon the cylinder represents the dependence according to the range-table of the timing of

the fuze, the elevation or the time of flight of the projectile from the distance for the value 0 of the height of the object and supplies thus the value of the one member of the equation. In the curved groove of the cylinder slides a pin, which through the agency of the rack 6 and a pinion 7 as well as bevel wheels adjusts the driving wheel 9 of a planet wheel 10.

The adjustment of the handle 1 is furthermore transmitted by the shaft 11 of the cylinder 4 to a threaded spindle 12 upon which a curved body or cam member 13 is adapted to be displaced axially. This curved member or cam is shaped in correspondence with the different timing of the fuze in relation to the value for $h=0$ as function of the distance. Turning a handle 14 at an indication device 15 adjusts, furthermore, the elevation. The adjustment of the handle 14 is transmitted by bevel wheels 16 to a second threaded spindle 17 upon which a curved body or cam member 18 is adapted to be displaced axially. The curved body 18 is shaped according to the different timing value of the curved body 13 as a function of the elevation. The multiplication of the values of the curved bodies 13 and 18 thus supplies the other member of the equation as differential value.

The multiplication is effected in the following manner: Upon each curved member 13 and 18 is adapted to slide a block 19 and 20. Both blocks 19 and 20 are displaceable upon a rod 21 pivoted at 22 upon a fixedly mounted block. Means not shown, keep both blocks 19 and 20 permanently in contact with their cam members 13 and 18. The block 20 is free to move parallel to the shaft 11, but is prevented from moving at right angles to that shaft, by being made slidable on a shaft parallel to shaft 11, as shown. A rack 23 in gear with a pinion 24 is connected with the block 19. The teeth on the parts 23 and 24 are so chosen, that the rack 23 may move parallel to itself without rotating the wheel 24 and that longitudinal motion only of the rack causes the wheel 24 to revolve. The rotation of the wheel 24 is then transferred by the bevel wheels 25 to the second driving wheel 26 of the planet wheel 10, the shaft 27 of which sets itself according to the arithmetical sum of the adjustments of the two driving wheels 9 and 26.

Taking into consideration the above mathematical consideration the adjustment of the shaft 27 then corresponds with the value of the timing of the projectile, the elevation of the gun, the time of flight of the projectile or the value to be determined. The adjustment imparted to the shaft 27 is then transmitted to suitable instruments or to the guns.

In Fig. 2 is shown a graph serving to explain a simplified embodiment of the invention. As an example is assumed the determination of the elevation of the gun as function of two variables. The distance values are then plotted as abscissæ and angle values as ordinates. A straight line 28 is then drawn through zero at any angle, along which are marked the individual heights. These are the points 29, 30 and so on. From the end point of the distance division, which in this illustration, for instance, is marked with the numeral 100 straight lines are drawn to the points 29, 30 and so on indicating heights. Into the triangles thus formed are then traced the difference curves, which represent the difference between the elevation according to the range-table for the individual heights diminished by the elevation of the gun for the heights 0 at the respective distance. These curves are designated by the reference numerals 31, 32 and so on. Now the amount of correction for the elevation of the gun is taken into account for the individual distances, which results from the particular ordinate of the selected point on the side of one of the triangles, and then the difference between this ordinate and the ordinate of the corresponding point on the corresponding curve is taken into account. For instance, the difference between the ordinate of a point on one of the sides of the triangle 0, 29, 100 and the ordinate of the corresponding point on the curve 31 may be taken. This has the advantage that the coarse correction derived from the triangles can be formed in a comparatively simple manner, and that the difference between triangle and curve as remaining fine amount, is always comparatively small, and can easily be obtained with great accuracy by small curve gears.

In Fig. 3 of the drawing is illustrated an embodiment of the invention based on the diagram in Fig. 2. The distance value is transmitted to a member 35 provided with a curved groove through a spindle 33 and bevel wheels 34. This curve member represents in accordance with Fig. 1 the elevation of the gun as function of the distance for the height 0 of the object. In this way a pin 36 and rack 37 are correspondingly moved and this motion is transmitted to a planet gear 39 across a spur and bevel gear 38. The adjustment of the spindle 33 is also across bevel wheels 40 transmitted to a screw threaded spindle 41, upon which a slide 42 is adapted to move axially. At right angles to the direction of motion of the slide 42 there is located a sliding rack 43. One end of the rack is pivotally connected with a slotted lever 44. The lever 44 is adapted to swing around the point 45. A block 47 adapted to slide along the spindle 48 engages this slot 46. The screw spindle 48 is journaled in stationary bearings and is adjusted according to the height of the object

fired at by means of bevel wheels 49 and the spindle 50. By the adjustments described a coarse correction is first effected of the amount of motion, determined by the cylinder 35 provided with the curved groove.

A comparison of Fig. 3 with Fig. 2 shows that the spindle 48 corresponds with the straight line 28 of Fig. 2, while the axis of the abscissæ in Fig. 2 corresponds with the screw spindle 41 of Fig. 3. The gear of Fig. 3 containing these two parts thus supplies an amount of correction, which corresponds with the vertical lines dropped from the straight line 28, Fig. 2, on the axis of the abscissæ. This amount is transferred to the planet gear by a pinion 51 in engagement with the rack 43, a spindle 52 and bevel wheels 53. It is now still necessary to effect a fine correction, which accounts for the difference of the ordinates of the straight lines 100, 29, 100, 30 and so on of Fig. 2 in relation to the ordinates of the curves 31, 32 and so on. For this purpose there is provided the gear 54 in Fig. 3. This contains a cylindrical member 55 grooved according to the difference mentioned, which is rotated by the shaft 33 across the bevel wheels 56 in accordance with the distance value. On the curve member is adapted to slide one end of a rack 57, which is adapted to move longitudinally upon a slide 58. The slide 58 rides upon a screw threaded spindle 59, which by means of the bevel wheels 60 and 61 is adjusted according to the vertical distance of the target from the horizontal plane. The slide 58 with the rack 57 is in accordance therewith displaced when the screw spindle 59 is turned. Since, as above described, the rack 57 contacts at one end with the curve member 55 it slides at right angles to the direction of adjustment of the slide 58 when this slide is adjusted.

The adjustment of the rack is across a pinion 62 transmitted to a spindle 63, which in its turn adjusts a planet gear 64, which is connected with the planet gear 39 by the spindle 65. The spindle 66 adjusted from the planet gear 64 then gives the desired evaluation of the functions, in the example chosen.

The timing of the fuze and the time of flight of the projectile as functions of the distance and the height of the target may be evaluated in a corresponding manner. Instead of distance and height trigonometrical functions of the angle may be introduced under which the target appears, in the case of airplanes the angle with the ground plane, as already mentioned before. If it is desired to determine the timing of the fuze by the aid of the new curve gear difference curves result in Fig. 2, which are located on the other side of the straight appertaining thereto. In such a case the curve 31, for instance, would be located substantially below the respective straight line 100, 29. Otherwise the determination of these functions takes place in a corresponding manner, as described hereinbefore with the reference to the elevation of the gun. It will be understood, that instead of the grooved cylinders illustrated in the examples other gears of equivalent function may be employed, such as spiral wheel gears.

The following example may serve to clarify the meaning of the chart shown in Fig. 2. By means of the groove cylinder 35, the shaft 66 receives a movement which represents the elevation of the gun for the particular distance of the target if the target were in a horizontal plane. The target, in the case of aeroplanes, is at a considerable distance above the gun and the gun must, therefore, be elevated by an additional amount corresponding to the angle of elevation of the target. The angle of elevation of the target does not, however, give exactly the correct elevation, as the raising of the firing plane of the gun will change the necessary elevation for a given range. Therefore, some correction of the angle obtained by adding the elevation of the gun for height zero and the elevation of the target must be made. Fig. 2, when considered in conjunction with Fig. 3, shows how this correction is made.

In Fig. 3, a coarse and fine adjustment are used. The abscissas in Fig. 2 represents the distances, while the ordinates represent the angle. The curves 31, 32, 32*a*, 32*b*, 32*c*, are curves of equal height of flight for varying ranges or target distances. That is, for each height of flight there will be a curve representing the angle at various ranges. This will supply the correction necessary to overcome the inaccuracy caused by the raising of the plane of firing. For instance, in Fig. 2, for a height of flight corresponding to the curve 32*a* and for a distance 50, the correction would be 1°. An arbitrary straight line 28 is drawn at any desired angle on which various heights 29, 30, etc., are marked. These points are connected by straight lines with the point 100.

The screw shaft 48 corresponds to the straight line 28, and the member 47 is adjusted thereon in accordance with the height of the target. The screw shaft 41 represents the line 0—100, and the member 42 is moved proportionately to the distance. The rotation imparted to the shaft 52 by the turning of the shaft 41 represents the correction in the angle of elevation for a change in height of the target. For instance, if the distance is 60 and the height 30*a* (Fig. 2), the correction would be 1°, the intersection of the line 60 and the line 30*a*—100.

However, this correction is only a coarse one, as it is clear from Fig. 2 that the curve 32*a*, the true curve for the height of flight,

touched the line 60 at about .8. It is therefore necessary to subtract from the correction of 1° the correction of .2 for an exact result. This fine correction is made by the curved body 55 which is shaped to represent the various curves 31, 32, 32*a*, etc., and the curves therebetween. These curves run around the cylinder, and the cylinder is rotated until the member 57 engages that portion of the curve which corresponds to the distance of the target. The member 57 is moved upwards or downwards to the curve of the particular height of the target by the screw shaft 59 and the exact correction, both of the particular height curve and of the particular point on that curve, is applied to the shaft 63 by the member 57. The curved body 55 has an extremely irregular shape, as it is formed from the range tables and represents the curves of the various heights as they vary with the range.

Various modifications and changes may be made without departing from the spirit and the scope of the invention, and I desire, therefore, that only such limitations shall be placed thereon as are imposed by the prior art.

I claim as my invention:

1. Apparatus for evaluating range table functions which depend on the distance and height of the target, comprising a body having a curved groove therein, said groove representing variations in one function according to the distance, a member adapted to be moved by said curved groove, a curved guide cut to represent the variations of another function with the distance, common means for moving said body and said guide by amounts proportional to the distance, a second curved guide cut to represent the variations of a third function according to the height, means for moving said second guide by amounts proportional to the height, a member adjustable by the combined movement of said guides and a differential device having its parts connected to said two members respectively, whereby the shaft of the said device is turned by an amount proportional to the sum of the movements of said members.

2. Apparatus for evaluating range table functions which depend on the distance and height of the target, comprising a shaft adapted to be rotated by amounts proportional to the distance, a cylinder mounted on said shaft having a curved groove therein, said groove representing variations in one function according to the distance, a curved guide threadedly mounted on said shaft, said guide being cut to represent the variations in another function according to the distance, a second shaft at an angle to said first shaft and having screw threads thereon, a second curved guide mounted on said second threaded shaft, said second guide being cut to represent the variations in a third function according to the height, a pivoted arm, blocks slidably mounted on said arm and adapted to engage said guide whereby movement of said guides moves said arm, a member connected to one of said blocks and adapted to move therewith in accordance with the product of the values set upon the two guides, and a differential device adapted to measure the sum of the movements of the said members.

3. Apparatus for evaluating range table functions which depend upon the distance and height of the target, comprising an element movable to give the result, a body having a curved groove therein corresponding to a function of the distance for the value 0 of the height and adapted to adjust said movable element, means for moving said body in proportion to the height of the target, a pair of members movable in proportion to the distance and height of the target respectively, the second of said members being moved by said body moving means, means operated by movement of said members and operating upon said movable element to combine the motions of said members to multiply said motions, said last means including curvilinear means whereby to produce the product of a function of said distance and a function of the height.

OTTO GAEDKE.