(12) INTERNATIONAL APPLICATION PUBLISHED UNDER THE PATENT COOPERATION TREATY (PCT)

(19) World Intellectual Property Organization
International Bureau

(43) International Publication Date
09 November 2017 (09.11.2017)

WIPO | PCT

(10) International Publication Number
WO 2017/191448 A1

(51) International Patent Classification:
A61M 16/08 (2006.01) *A61M 16/00* (2006.01)
A61M 16/20 (2006.01) *A61M 16/01* (2006.01)

(21) International Application Number:
PCT/GB2017/051235

(22) International Filing Date:
03 May 2017 (03.05.2017)

(25) Filing Language: English

(26) Publication Language: English

(30) Priority Data:
1607682.0 03 May 2016 (03.05.2016) GB

(71) Applicant: **HAMAD MEDICAL CORPORATION** [QA/QA]; PO Box 3050, Doha (QA).

(71) Applicant *(for TT only)*: **CORNFORD, James** [GB/GB]; Forresters, Sherborne House, 119-121 Cannon Street, London Greater London EC4N 5AT (GB).

(72) Inventors: **ALREFAI, Yusuf Kassim**; Hamad Medical Corporation, PO Box 3050, Doha (QA). **HAMEED, Jafar**; Hamad Medical Corporation, PO Box 3050, Doha (QA).

(74) Agent: **CORNFORD, James**; Forresters, Sherborne House, 119-121 Cannon Street, London Greater London EC4N 5AT (GB).

(81) Designated States *(unless otherwise indicated, for every kind of national protection available)*: AE, AG, AL, AM, AO, AT, AU, AZ, BA, BB, BG, BH, BN, BR, BW, BY, BZ, CA, CH, CL, CN, CO, CR, CU, CZ, DE, DJ, DK, DM, DO, DZ, EC, EE, EG, ES, FI, GB, GD, GE, GH, GM, GT, HN, HR, HU, ID, IL, IN, IR, IS, JP, KE, KG, KH, KN, KP, KR, KW, KZ, LA, LC, LK, LR, LS, LU, LY, MA, MD, ME, MG, MK, MN, MW, MX, MY, MZ, NA, NG, NI, NO, NZ, OM, PA, PE, PG, PH, PL, PT, QA, RO, RS, RU, RW, SA, SC, SD, SE, SG, SK, SL, SM, ST, SV, SY, TH, TJ, TM, TN, TR, TT, TZ, UA, UG, US, UZ, VC, VN, ZA, ZM, ZW.

(84) Designated States *(unless otherwise indicated, for every kind of regional protection available)*: ARIPO (BW, GH, GM, KE, LR, LS, MW, MZ, NA, RW, SD, SL, ST, SZ, TZ, UG, ZM, ZW), Eurasian (AM, AZ, BY, KG, KZ, RU, TJ, TM), European (AL, AT, BE, BG, CH, CY, CZ, DE, DK, EE, ES, FI, FR, GB, GR, HR, HU, IE, IS, IT, LT, LU, LV, MC, MK, MT, NL, NO, PL, PT, RO, RS, SE, SI, SK, SM, TR), OAPI (BF, BJ, CF, CG, CI, CM, GA, GN, GQ, GW, KM, ML, MR, NE, SN, TD, TG).

(54) Title: A BREATHING CIRCUIT

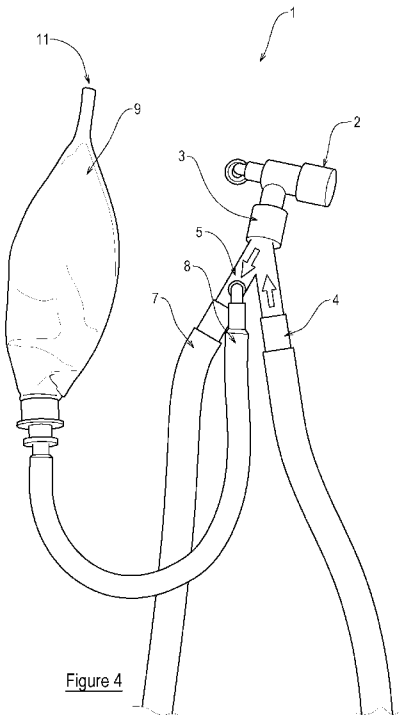

Figure 4

(57) Abstract: The present invention provides a breathing circuit for delivering a flow of gases to a patient, the circuit comprising a connector for connecting the circuit to a patient; an inspiration tube connected to the connector, the inspiration tube being connectable to a ventilator and for receiving an inflow of gases for the patient; and an expiration portion. The expiration portion comprises first and second expiratory tubes connected to the connector. The first expiratory tube is connectable to a ventilator, the first expiratory tube in use providing a first expiratory flow path from the patient via the connector and the first expiratory tube to the ventilator. The second expiratory tube is connected to an open-tail reservoir bag, the second expiratory tube in use providing a second expiratory flow path from the patient via the connector and the second expiratory tube to the reservoir bag. The system further comprises a valve operable to, in use, switch a flow of expiratory gases from the patient between the first and second expiratory flow paths. The system reduces storage space, material use and manufacturing costs whilst greatly enhancing convenience and safety for the patient.

WO 2017/191448 A1

[Continued on next page]

Published:
— *with international search report (Art. 21(3))*
— *with amended claims and statement (Art. 19(1))*

Title: A breathing circuit

Field

THIS INVENTION relates to a respiratory or breathing circuit, more specifically to a paediatric anaesthesia circuit.

Background

Paediatric care often requires specialist carers and equipment, to deal with the wide variety of conditions that may affect babies, children and young people. In some cases, anaesthesia circuits intended for adult use are used in paediatric care. Sometimes, paediatric circuits are simply smaller than their adult equivalents, but additional features may also be included for added safety or convenience. Use of circuits intended for adults in paediatric care can be inconvenient in some cases, but ineffective or even dangerous in others.

An improved circuit system is sought to provide a cost-effective but more versatile and safer system suitable for paediatric anaesthesia care.

Prior art

Figures 1 and 2 illustrate prior art 'T-piece' and 'circle' breathing systems, respectively. The T-piece system 100 of figure 1 comprises an inspiratory tube 101, an angle piece connector 102 for attachment to a tracheal or intubation tube (not shown) and an expiratory tube 103 leading to an open-tail reservoir bag 104 for manual ventilation. The circle system 200 of figure 2 comprises an inspiratory tube 201 connected to an angle piece connector 202 for attachment to a tracheal or intubation tube and an expiratory tube 203.

The inspiratory tube 201 and expiratory tube 203 are suitable for connecting to a ventilator 110 (not shown) to aid respiration of the patient. The angle piece connector 202 connects to the patient via a mask or a tracheal or intubation tube (not shown). The circle system 200 may optionally further comprise a (closed) reservoir bag (not shown), e.g. for induction of anaesthesia.

Most ventilators/anaesthesia delivery units have at least three ports:

a. inspiratory (for a circle system);
b. expiratory (for a circle system); and
c. a main fresh gas flow outlet where a T-piece or coaxial system can be attached.

Figures 3a and 3b show the prior art circle system 200 connected to the inspiratory 110a and expiratory 110b ports on a ventilator 110 and the prior art T-piece system 100 connected to a fresh-gas-flow port 110c of the ventilator 110.

If the anaesthetist chooses to use the circle system only with its reservoir bag for induction of anaesthesia and then followed by automatic ventilation, then this is possible without using the T-piece system. Alternatively, the anaesthetist can use the T-piece system for induction followed by the circle system - here they have to ensure that they switch between the two breathing circuits appropriately. Figure 3b shows the knobs/ switches that allow movement from the circle system to the T-piece system and vice-versa. In the prior art system of figure 3a and 3b, two knobs A and B function to switch between the systems. In some cases, these knobs comprise A) a flow parameter control switch, e.g. for adjusting parameters of the gases in the delivered flow (percentage oxygen, percentage anaesthetic gases, flow rate etc.); and B) a flow mode switch for switching between return (for use with the circle system) and non-return/fresh flow (for use with the T-piece system) flow modes.

'Paediatric Anaesthesia for beginners' (Dr. Tom Lawson, 2011), available online at: http://www.apagbi.org.uk/sites/default/files/images/APA%20Guide%20latest%20Version%2011_9_13.pdf sets out additional background to the present invention. Protection may be sought for features disclosed in the present application in combination with material known in the art, including this referenced material.

For paediatric care, the best systems are designed specifically for paediatric use, e.g. by being suitably sized, lightweight and with the T-piece having an appropriately-sized reservoir bag, e.g. half a litre.

Brief summary of the invention

The inventors have designed a paediatric anaesthesia circuit operable in multiple modes with a mechanism for safely switching therebetween. The claimed invention is beneficial because it provides a relatively simple, efficient system that reduces storage space, material use and manufacturing costs whilst greatly enhancing convenience for the anaesthetist and safety for the patient.

A first aspect of the present invention provides a breathing circuit for delivering a flow of gases to a patient, comprising:

a connector for connecting the circuit to a patient;

an inspiration tube connected to the connector, the inspiration tube being connectable to a ventilator and for receiving an inflow of gases for the patient; and

an expiration portion, the expiration portion comprising first and second expiratory tubes connected to the connector, wherein:

the first expiratory tube is connectable to a ventilator, the first expiratory tube in use providing a first expiratory flow path from the patient via the connector and the first expiratory tube to the ventilator;

the second expiratory tube is connected to an open-tail reservoir bag, the second expiratory tube in use providing a second expiratory flow path from the patient via the connector and the second expiratory tube to the reservoir bag; and

the system further comprises a valve operable to, in use, switch a flow of expiratory gases from the patient between the first and second expiratory flow paths.

The present invention further provides a breathing circuit as claimed.

Brief description of the figures

In order for the present invention to be more readily understood, prior art and preferable embodiments of the invention are described, by way of example only, with reference to the accompanying drawings, in which:

FIGURE 1 shows a top-down view of a prior art T-piece system;
FIGURE 2 shows a top-down view of a prior art circle system;
FIGURE 3a and 3b are perspective views of a prior art system with the prior art circuit and T-piece systems connected to a ventilator;
FIGURE 4 shows a top-down view of a first embodiment of the present invention;
FIGURES 5a and 5b show top-down views of the first embodiment, shown schematically to be operating in a first operational mode;
FIGURES 6a and 6b show top-down views of the first embodiment, shown schematically to be operating in a second operational mode;
FIGURE 7 shows a close-up perspective view of the first embodiment connected to a ventilator;

FIGURES 8a to 8d are schematics of a first valve system for the present invention;

FIGURES 9, 10a and 10b are perspective schematics of a second valve system for the present invention;

FIGURE 11 is a schematic of a variant of the second valve system shown in figures 9, 10a and 10b; and

FIGURES 12a to 12d are schematics of a third valve system for the present invention.

Detailed description of the invention

Figure 4 illustrates a first embodiment of the present invention. The breathing circuit 1 of figure 4 comprises a Y-piece connector 3 for connecting the circuit to a patient, e.g. by way of an optional angle piece connector 2 and typically a mask (not shown) or a tracheal or intubation tube (not shown). An inspiration tube 4 is connected to the connector 3, the inspiration tube 4 suitable for receiving inflow from a ventilator 10 (not shown in figure 4) in use. The circuit 1 also comprises an expiration portion or limb 6, comprising first 7 and second 8 expiratory tubes, each connected to the connector 3. The first expiratory tube 7 is connectable to the ventilator 10 (not shown) in use and the second expiratory tube 8 is connected to a reservoir bag 9 having an open tail 11.

The system 1 further comprises a flow switch in the form of a valve 5 (better shown in figures 5a and 5b), the valve 5 in use being operable to switch a flow of gases between the first and second expiratory tubes 7, 8 more specifically between:

a first flow path with inflow from ventilator 10 along the inspiratory tube 4 to the patient via the connector 3, including a first expiratory flow path from the patient through the first expiration tube 7 back to the ventilator 10; and

a second flow path with inflow (e.g. from ventilator 10 or a fresh gas flow outlet) along the inspiratory tube 4 to the patient via the connector 3, including a second expiratory flow path from the patient to the reservoir bag 9 via the second expiratory tube 8.

In essence, comparing the embodiment of figure 4 with those of figures 1 and 2, in figure 4 the inspiration tube 4, the connector 3 and the first expiratory tube 7 form a circle flow system, whilst the inspiration tube 4, the connector 3, the second expiratory tube 8 and the reservoir bag 9 form a T-piece flow system; and the system is switchable between the circle and T-piece flow systems. The system is connectable to the ventilator 10, which may be operable in return (for use with the circle system) and non-return/fresh flow (for use with the T-piece system) flow modes. In preferred embodiments, the same inspiratory inflow path from the ventilator 10 is used in both systems without requiring any mode or ventilator port switching.

The switch/valve 5 of the circuit 1 and its operation are now described in more detail. Preferred embodiments are described in relation to the breathing circuit 1, but protection may be sought for the switch/valve 5 in isolation.

One embodiment of the valve 5 is shown in detail in figures 5a to 6b. In figure 5a, the valve 5 is in a first 'valve up' position, permitting flow along the first flow path (i.e. with inflow from the ventilator 10 along the inspiratory tube 4 to the patient via the connector 3 and expiratory flow along the first expiratory flow path), as explained above and illustrated in figure 5b. In figure 6a, the valve 5 is in a second 'valve pushed in' position, permitting flow along the second flow path, (i.e. with the same inflow path but with expiratory flow along the second expiratory flow path) as explained above and illustrated in figure 6b.

The circuit 1 is shown connected to a ventilator 10 in figure 7. Figures 5a-7 show the valve 5 at a juncture of the first and second expiratory flow tubes 7,8

which are connected together by the Y-piece connector 3. As shown best in figure 7, the optional angle piece connector 2 preferably comprises a CO_2 port 12 for capnography.

In some embodiments, the circle flow portion of the circuit 1 additionally comprises a closed reservoir bag at a T-junction along the first expiratory tube 8, wherein the first expiratory tube 8 passes flow back to the ventilator past the closed reservoir bag. One-way flow valves may also be provided to direct flow appropriately through the circuit 1.

The system 1 of figures 4-7 is beneficial, because it combines two breathing systems, avoiding the need to switch between two separate systems. The combined system provides faster, safer switching and reduces intervention. Comparing the present invention to the prior art arrangement of figure 3, in the present invention, no flow mode switching may be required at the ventilator (because the same inspiratory inflow path can used for both modes as described above with reference to figure 4) thus only flow parameter controls may be required on the ventilator with no mode switching controls needed - with reference to figure 3b, only knob A would be required in this kind of anaesthesia delivery unit instead of both knobs A and B in the prior art arrangement, hence also reducing possible errors.

Figures 8a to 8d illustrate a first embodiment of the valve 5. Figure 8a is a schematic representation of the tubes of the circuit 1 and shows the following:

A. expiration to ventilator (first expiratory flow path)

B. expiration to reservoir bag (manual resuscitator) (second expiratory flow path)

C. inspiration from ventilator (same for both first and second flow paths)

D. to patient via mask/ intubation tube (same for both first and second flow paths)

Figure 8b shows the valve 5 in the first position, permitting flow along the first flow path to/from the ventilator, with the return to the ventilator being via the first expiratory tube 7. The second expiratory flow path is blocked, with second expiratory tube 8 sealed. The seal can withstand pressures of up to 3 bar.

In this embodiment, the valve 5 is controlled by manual rotation and figure 8c shows the valve 5 in the second position, permitting flow along the second flow path, with expiration to the reservoir bag 9 via the second expiratory tube 8. The first expiratory flow path is blocked, with first expiratory tube 7 sealed. Again, the seal can withstand pressures of up to 3 bar.

In this embodiment, the valve profile is generally L-shaped. Figure 8d shows above, side (left-right), side (top-bottom) and below views of a preferred switch valve profile for reliably sealing the flow paths.

The switch 5 is constructed from a rigid/hard material and the preferred diameter of the tubes that attach at points A, B, C and D are 10mm for the tubes in the T-piece system and 15mm for the tubes in the circuit system.

A preferred second embodiment of the valve 5 is illustrated in figures 9, 10a and 10b. Figure 9 shows a 'plunger' or 'sliding shuttle' valve which is moveable between at least two positions to select the expiratory flow path. Preferably, the valve 5 has plungers at each end for manually sliding the shuttle between the first and second positions.

Figure 10a illustrates the valve 5 in the first position, with flow permitted through the leftmost flow path. Figure 10b illustrates the valve 5 in the second position, with flow permitted through the rightmost flow path.

Preferably, the valve plungers are colour-coded to aid the operator in switching between circuits.

In some embodiments, the valve 5 is biased using a biasing element 13, e.g. a spring, preferably biased into one flow path/mode, so that the operator must keep the plunger depressed to permit flow into other flow paths/modes. A locking mechanism may be provided for securing the valve against the biasing element. In some embodiments, the biasing is to the first expiratory flow path which returns to the ventilator 10, since the reservoir bag 9 circuit is normally used for shorter periods. In other embodiments, the biasing is to the second expiratory flow path, using the T-piece system.

Figure 11 shows a schematic of the shuttle valve 5 and illustrates one such embodiment where the valve 5 comprises a biasing element 13 in the form of a spring. The plunger is biased to the right, thus maintains the valve 5 in the flow mode of figure 10b.

In other embodiments, biasing elements such as springs are provided on both sides of the valve 5 to bias the valve 5 out of both T-piece and circle flow modes and into a third mode, which may be a 'no-flow' mode where both expiratory flow paths are closed and the operator must operate the valve 5 to use either other flow mode. This additional 'no flow' mode acts as a safety mechanism to ensure the operator selects a suitable flow mode.

Figures 12a to 12d illustrate a third embodiment of the valve 5. In figure 12a, there is a plunger with a locking system and a valve biasing element 13 in the form of a spring (e.g. vertical torsion or conical) biased into a neutral (inactive)

position, allowing fresh gas flow to the T-piece circuit, i.e. to the open-tail bag 9. In figure 12b, the plunger is pushed, turned and locked, allowing gas flow in the circle (circuit) system.

Figure 12c illustrates all elements of the valve 5 and figure 12d shows the preferred external shape of the valve 5.

In the embodiment of figures 12a to 12d, the valve 5 is biased into the neutral, unlocked position and also has a locked position, which secures the valve 5 in a position overcoming the biasing force. In this embodiment, the valve 5 permits flow only through the second expiratory flow path (to the T-piece system) in the neutral position and permits flow only through the first expiratory flow path (to the circle system) in the locked position. In other embodiments, the reverse arrangement is provided.

The locking mechanism comprises a notch or groove in an inner portion of a housing of the valve system and a tongue attached to the plunger, wherein the tongue is received in the notch, against the biasing force of the biasing element 13 to secure the valve 5 in the 'active' or locked position. In the embodiment shown, the tongue is rotated relative to the housing to engage the groove. O-rings 14 are provided to seal each expiratory flow path when not in use and the inner parts of the housing adjacent to the opening between the first and second expiratory tube 7,8 taper towards the opening, provide increased pressure at the periphery of the flow path, thus providing an improved seal. In this embodiment, the valve 5 is manually operated, but in other embodiments the valve may be electronically operated.

This third embodiment of the valve 5 is beneficial over the earlier embodiments because it is more compact, requires a single biasing element 13 in the form of a spring, and includes a locking mechanism to permit flow of anaesthetic gases and oxygen ONLY via the circle system. The valve 5 is also a single action switch rather than a shuttle valve, giving fewer points of possible failure.

In preferred embodiments, the circuit 1 further comprises a visual or audible indicator, such as a display or a light, for indicating a status of the circuit 1, e.g. OFF, STANDBY (system on but not in use) and the (expiratory) flow path (i.e. the flow mode e.g.: NO FLOW, RETURN/CIRCLE, FRESH FLOW/T-PIECE) in use. In further preferred embodiments, the circuit 1 further comprises a communications module for transmitting data preferably including the flow mode or flow parameters to other components and/or external devices (those not forming part of the breathing circuit itself), such as the ventilator 10.

Switching between separate T-piece and circle systems generally necessitates changes in the ventilator mode (from return flow to non-return/fresh flow and vice versa) and the present invention can eliminate the risk associated therewith by combining the two systems to avoid the need to switch the mode or automatically changing the mode of the circuit/ventilator where necessary, as appropriate. In further preferred embodiments, the circuit 1 is configured to switch a flow mode or parameter of the ventilator 10 and/or of the circuit 1 to coincide with the other of the ventilator 10 and the breathing circuit 1, to ensure that the two systems (the breathing circuit 1 and the ventilator 10) are configured to work together correctly. This is advantageous as it can prevent inappropriate use of the wrong circuit/wrong ventilator mode or unsuitable flow parameters.

For example, when the circuit is in the first flow mode to/from the ventilator, the circuit 1 communicates with the ventilator 10 and confirms that the ventilator 10 is functioning in the appropriate (return) flow mode with suitable flow parameters, else the system may be configured to switch a predetermined one of the circuit 1 and the ventilator 10 so that the modes coincide and/or the flow parameters are suitable, or to disable all flow and sound an alarm or display a message on a display. For example, ventilator or breathing circuit 1 may comprise a storage medium that stores acceptable or non-acceptable

combinations of flow modes and/or flow parameters and the system checks the initial settings against the acceptable or non-acceptable combinations before making an adjustment or notifying the user.

The circuit 1 may therefore comprise a processor, sensor(s), motor(s), memory and/or a communications module configured to sense a position of the valve 5 and therefore determine the flow mode, and then communicate the mode to other components of the system or external devices such as the ventilator 10, preferably adjusting the flow mode of the circuit 1 in response to sensed information or data received from the external devices, or sending configuration information to adjust the component/external device for compatibility with the circuit 1. Particularly suitable sensors include temperature sensors, humidity sensors and flow rate sensors.

Preferably, the external device (ventilator 10) or the breathing circuit 1 can be configured as a MASTER device, with the other of the external device (ventilator 10) and the breathing circuit 1 thereby being configured as a SLAVE device and the slave device adjusts to function correctly with the master device.

In some embodiments, the circuit 1 comprises the ventilator 10, which may be an anaesthesia ventilator configured to deliver aesthetic gases to the patient.

Preferably, the ventilator comprises a communications module and the ventilator is configured to:

receive information from the circuit and adjust a mode or flow parameter of the ventilator for compatibility with the circuit; or

receive information from the circuit and send instructions back to the circuit to adjust a mode of the circuit for compatibility with the ventilator.

Index to reference numerals

1. breathing circuit
2. angle piece connector
3. connector
4. inspiration tube or limb
5. valve
6. expiratory portion or limb
7. first expiratory tube or limb
8. second expiratory tube or limb
9. (open tail) reservoir bag
10. ventilator
11. open tail of reservoir bag
12. CO_2 port
13. valve biasing element
14. valve O-rings

When used in this specification and claims, the terms "comprises" and "comprising" and variations thereof mean that the specified features, steps or integers are included. The terms are not to be interpreted to exclude the presence of other features, steps or components.

The features disclosed in the foregoing description, or the following claims, or the accompanying drawings, expressed in their specific forms or in terms of a means for performing the disclosed function, or a method or process for attaining the disclosed result, as appropriate, may, separately, or in any combination of such features, be utilised for realising the invention in diverse forms thereof. In particular, any specific element of one or more embodiments may be combined with any other embodiments disclosed herein.

Claims

1. A breathing circuit for delivering a flow of gases to a patient, comprising:

a connector for connecting the circuit to a patient;

an inspiration tube connected to the connector, the inspiration tube being connectable to a ventilator and for receiving an inflow of gases for the patient; and

an expiration portion, the expiration portion comprising first and second expiratory tubes connected to the connector, wherein:

the first expiratory tube is connectable to a ventilator, the first expiratory tube in use providing a first expiratory flow path from the patient via the connector and the first expiratory tube to the ventilator;

the second expiratory tube is connected to an open-tail reservoir bag, the second expiratory tube in use providing a second expiratory flow path from the patient via the connector and the second expiratory tube to the reservoir bag; and

the system further comprises a valve operable to, in use, switch a flow of expiratory gases from the patient between the first and second expiratory flow paths.

2. The circuit of claim 1, wherein, in use:

the inspiration tube, the connector and the first expiratory tube form a circle flow system;

the inspiration tube, the connector, the second expiratory tube and the reservoir bag form a T-piece flow system; and

the system is switchable between the circle and T-piece flow systems.

3. The circuit of any preceding claim, further comprising a ventilator, wherein the ventilator is switchable between return and non-return or fresh flow modes.

4. The circuit of any of claims 1 to 3, wherein the valve comprises a rotatable valve at a juncture of the first and second expiratory tubes.

5. The circuit of any of claims 1 to 3, wherein the valve comprises a plunger or a sliding shuttle at a juncture of the first and second expiratory tubes.

6. The circuit of any preceding claim, wherein the valve is biased into permitting flow via one of the expiratory flow paths, preferably through the second expiratory flow path.

7. The circuit of claim 4 or 5, wherein the valve is biased to prevent flow via either one or both of the flow paths.

8. The circuit of claim 5, 6 or 7, wherein the valve comprises two opposed knobs for sliding the shuttle between the flow paths, preferably wherein the knobs are different colours.

9. The circuit of any preceding claim, wherein the valve is movable between a neutral, unlocked position and a locked position, wherein:

the valve is biased into the neutral position and permits flow only through one of the expiratory flow paths in the neutral position; and

the valve permits flow only through another one of the expiratory flow paths in the locked position.

10. The circuit of claim 9, wherein:

the valve permits flow only through the second expiratory flow path in the neutral position; and

the valve permits flow only through the first expiratory flow path in the locked position.

11. The circuit of any preceding claim, further comprising a visual or audible indicator, configured to indicate a status of the breathing circuit.

12. The circuit of claim 11, wherein the indicator comprises a display or an illumination element configured to indicate the status of the circuit.

13. The circuit of any preceding claim, wherein the circuit further comprises a communications module configured to send data relating to the circuit and/or receive data to/from other components of the system and/or external devices.

14. The circuit of claim 13, wherein the system is configured to:

switch the expiratory flow path of gases in the breathing circuit depending on the data sent and/or received from other components of the system and/or external devices via the communications module; and/or

send instructions via the communications module to other components of the system and/or external devices to adjust a mode or parameter of the other component or external device for compatibility with the circuit.

15. The circuit of any preceding claim, further comprising a ventilator, wherein the ventilator comprises a communications module and the ventilator is configured to:

receive data from the circuit and adjust a mode or flow parameter of the ventilator for compatibility with the circuit; and/or

receive data from the circuit and send instructions to the circuit to adjust a mode of the circuit for compatibility with the ventilator.

16. The circuit of claim 3 or 15 or any claim dependent thereon, wherein the ventilator is an anaesthesia delivery unit and is configured to provide anaesthetic gases flow.

17. The circuit of any preceding claim, further comprising an angle piece connector, a mask and/or an intubation tube.

18. The circuit of any preceding claim, wherein the circuit is an anaesthetic paediatric circuit.

AMENDED CLAIMS
received by the International Bureau on 18 September 2017 (18.09.2017)

Claims

1. A breathing circuit for delivering a flow of gases to a patient, comprising:

a connector for connecting the circuit to a patient;

an inspiration tube connected to the connector, the inspiration tube being connectable to a ventilator and for receiving an inflow of gases for the patient;

an open-tail reservoir bag; and

an expiration portion, the expiration portion comprising first and second expiratory tubes connected to the connector, wherein:

the first expiratory tube is connectable to a ventilator, the first expiratory tube in use providing a first expiratory flow path from the patient via the connector and the first expiratory tube to the ventilator;

the second expiratory tube is connected to the open-tail reservoir bag, the second expiratory tube in use providing a second expiratory flow path from the patient via the connector and the second expiratory tube to the reservoir bag; and

the system further comprises a valve operable to, in use, switch a flow of expiratory gases from the patient between the first and second expiratory flow paths.

2. The circuit of claim 1, wherein, in use:

the inspiration tube, the connector and the first expiratory tube form a circle flow system;

the inspiration tube, the connector, the second expiratory tube and the reservoir bag form a T-piece flow system; and

the system is switchable between the circle and T-piece flow systems.

3. The circuit of any preceding claim, further comprising a ventilator, wherein the ventilator is switchable between return and non-return or fresh flow modes.

4. The circuit of any of claims 1 to 3, wherein the valve comprises a rotatable valve at a juncture of the first and second expiratory tubes.

5. The circuit of any of claims 1 to 3, wherein the valve comprises a plunger or a sliding shuttle at a juncture of the first and second expiratory tubes.

6. The circuit of any preceding claim, wherein the valve is biased into permitting flow via one of the expiratory flow paths, preferably through the second expiratory flow path.

7. The circuit of claim 4 or 5, wherein the valve is biased to prevent flow via either one or both of the flow paths.

8. The circuit of claim 5, 6 or 7, wherein the valve comprises two opposed knobs for sliding the shuttle between the flow paths, preferably wherein the knobs are different colours.

9. The circuit of any preceding claim, wherein the valve is movable between a neutral, unlocked position and a locked position, wherein:

the valve is biased into the neutral position and permits flow only through one of the expiratory flow paths in the neutral position; and

the valve permits flow only through another one of the expiratory flow paths in the locked position.

10. The circuit of claim 9, wherein:

the valve permits flow only through the second expiratory flow path in the neutral position; and

the valve permits flow only through the first expiratory flow path in the locked position.

11. The circuit of any preceding claim, further comprising a visual or audible indicator, configured to indicate a status of the breathing circuit.

12. The circuit of claim 11, wherein the indicator comprises a display or an illumination element configured to indicate the status of the circuit.

13. The circuit of any preceding claim, wherein the circuit further comprises a communications module configured to send data relating to the circuit and/or receive data to/from other components of the system and/or external devices.

14. The circuit of claim 13, wherein the system is configured to:

switch the expiratory flow path of gases in the breathing circuit depending on the data sent and/or received from other components of the system and/or external devices via the communications module; and/or

send instructions via the communications module to other components of the system and/or external devices to adjust a mode or parameter of the other component or external device for compatibility with the circuit.

15. The circuit of claim 1, 2 or any of claims 4 to 14, further comprising a ventilator, or the circuit of claim 3, wherein the ventilator comprises a communications module and the ventilator is configured to:

receive data from the circuit and adjust a mode or flow parameter of the ventilator for compatibility with the circuit; and/or

receive data from the circuit and send instructions to the circuit to adjust a mode of the circuit for compatibility with the ventilator.

16. The circuit of claim 3 or 15 or any claim dependent thereon, wherein the ventilator is an anaesthesia delivery unit and is configured to provide anaesthetic gases flow.

17. The circuit of any preceding claim, further comprising an angle piece connector, a mask and/or an intubation tube.

18. The circuit of any preceding claim, wherein the circuit is an anaesthetic paediatric circuit.

STATEMENT UNDER ARTICLE 19(1) PCT

AMENDMENTS AND BASIS

The applicant amends claims 1 and 15.

Claim 1 is amended to positively recite an open-tail reservoir bag. This amendment has basis throughout the application as filed - particularly in the section entitled 'detailed description of the invention' and figure 4.

The dependency of claim 15 is amended to address the clarity issues identified.

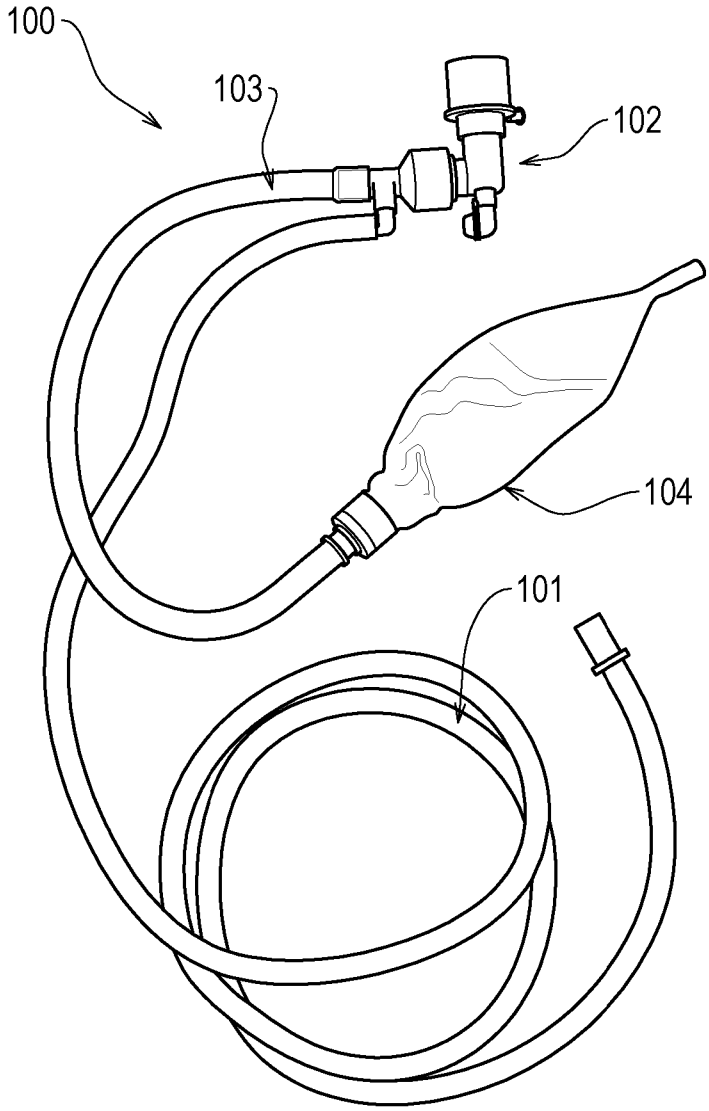

Figure 1 (Prior Art)

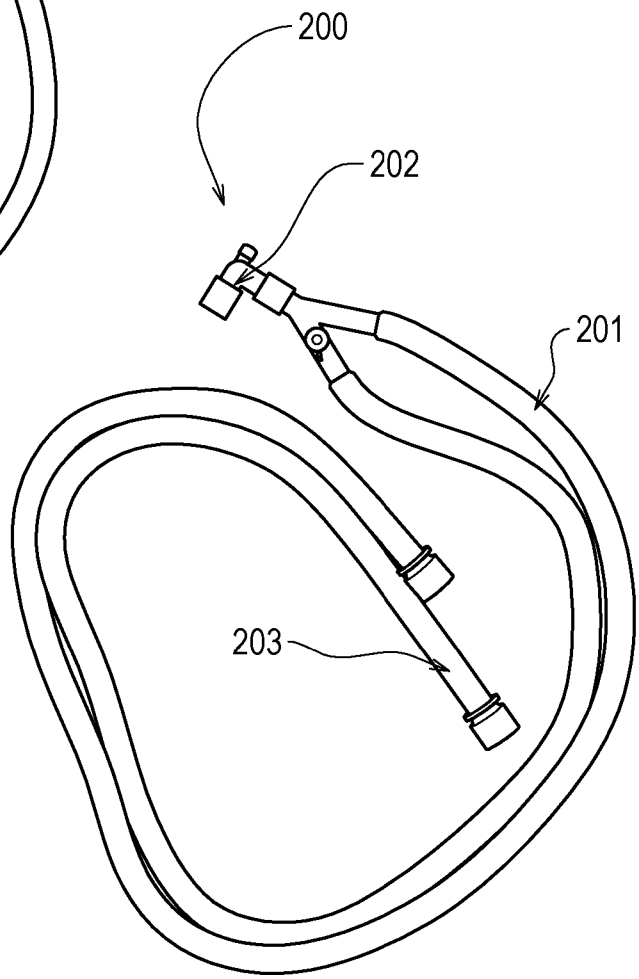

Figure 2 (Prior Art)

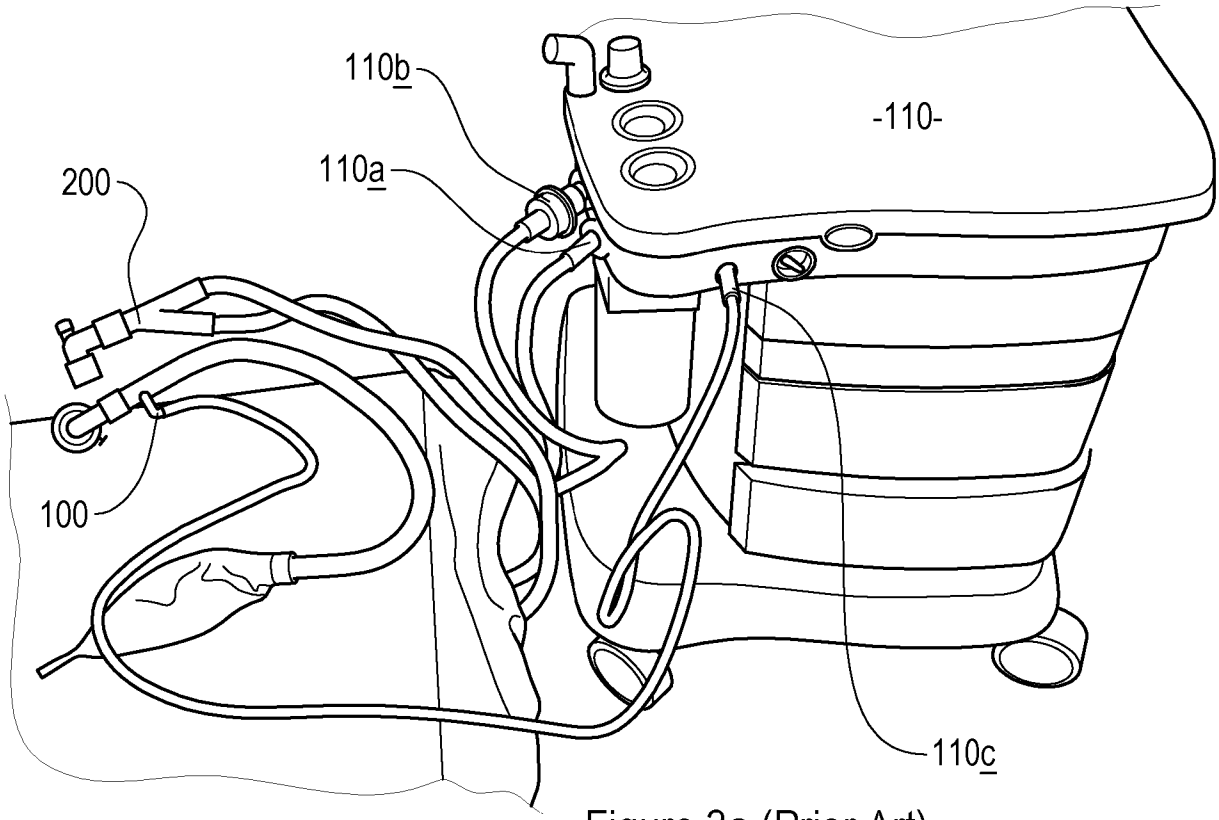

Figure 3a (Prior Art)

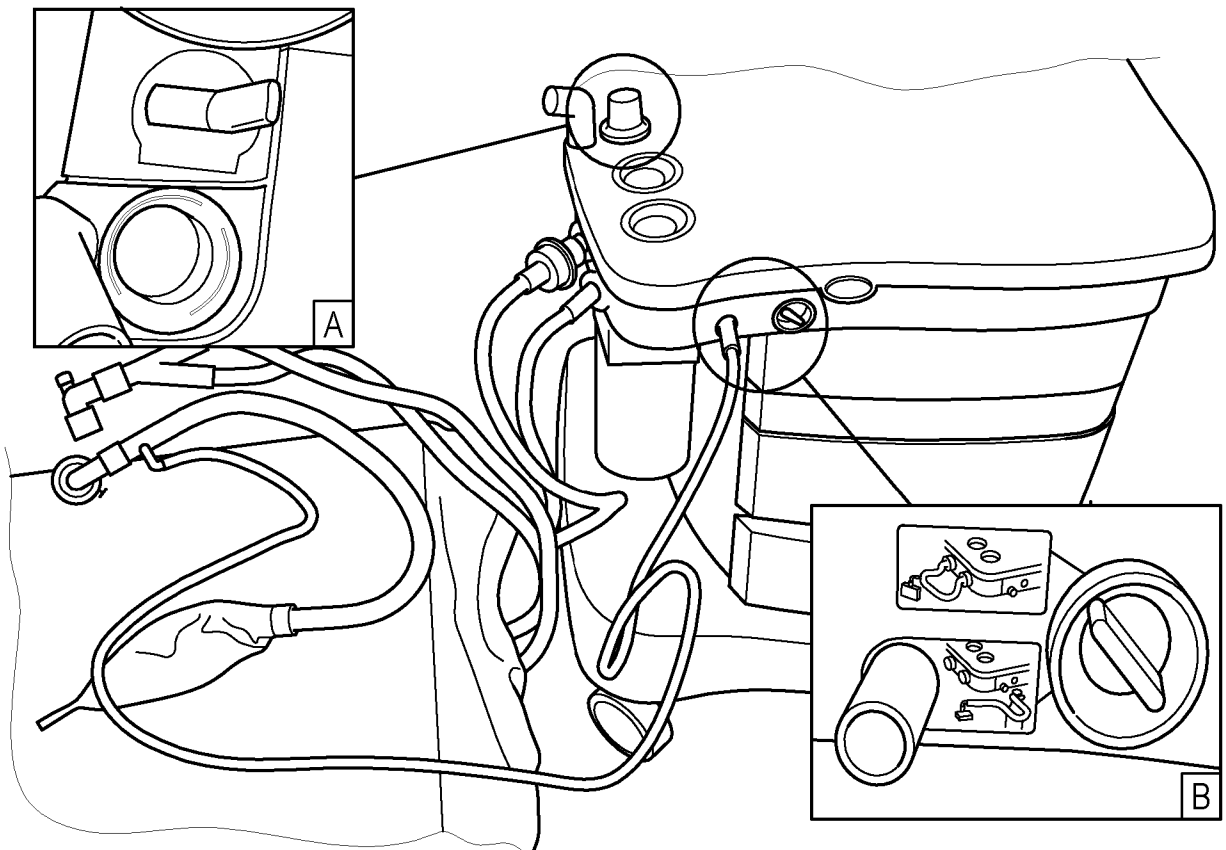

Figure 3b (Prior Art)

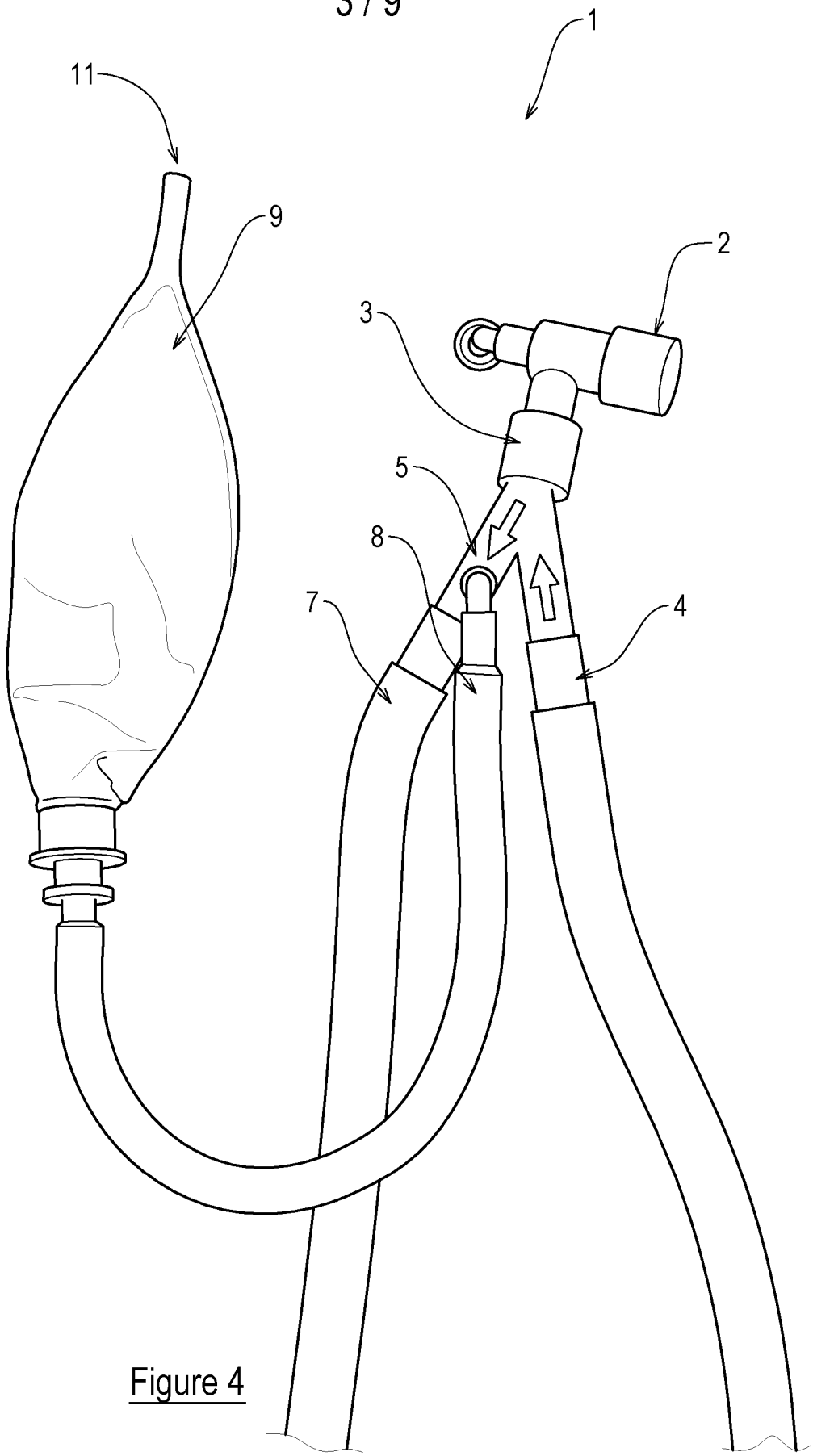

Figure 4

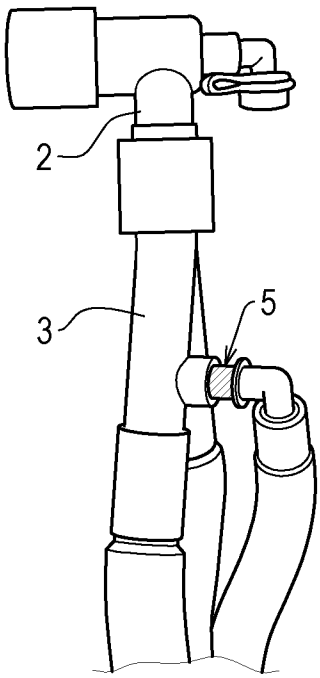

Figure 5a

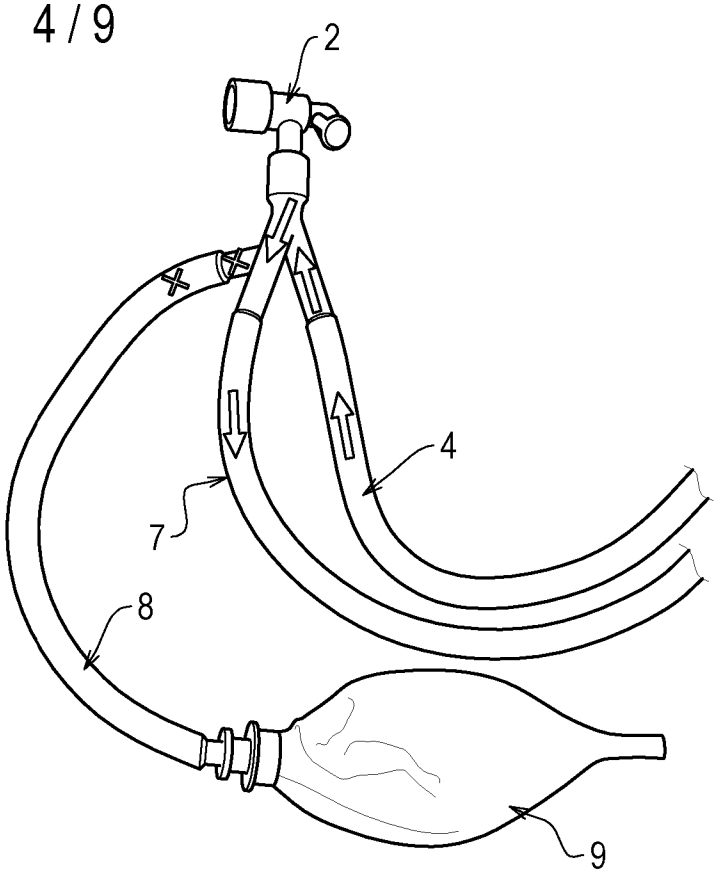

Figure 5b

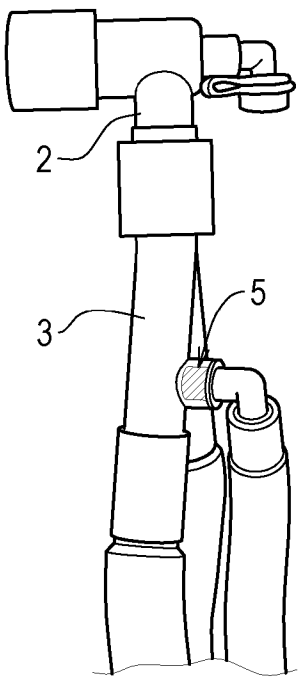

Figure 6a

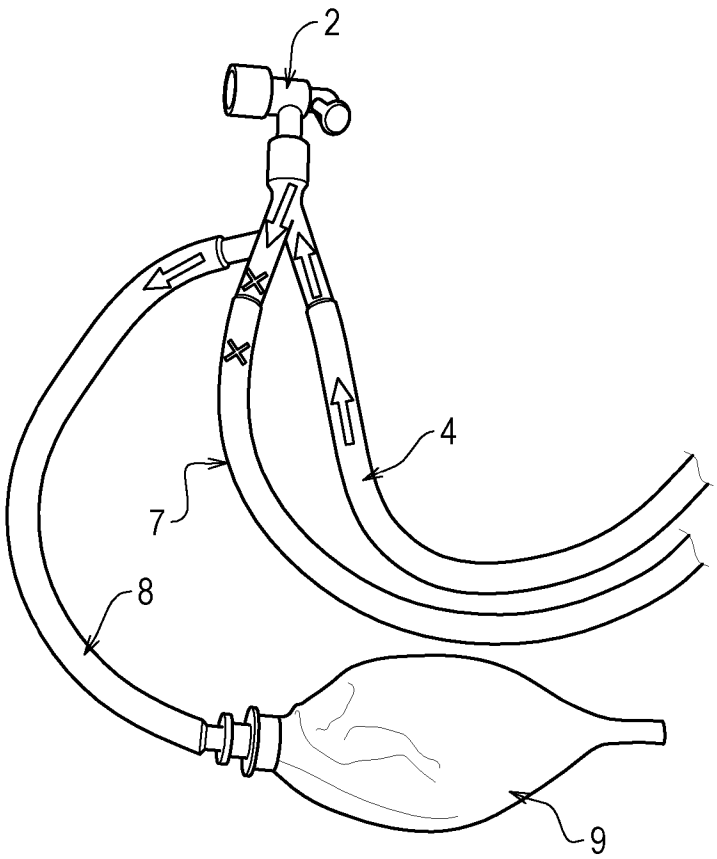

Figure 6b

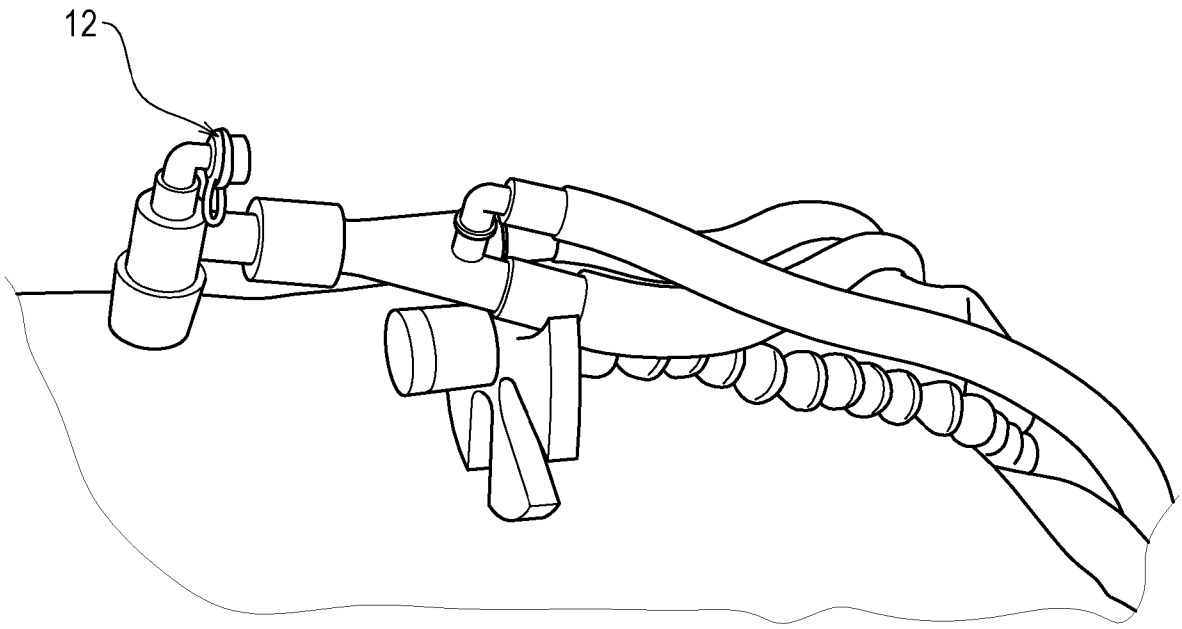

Figure 7

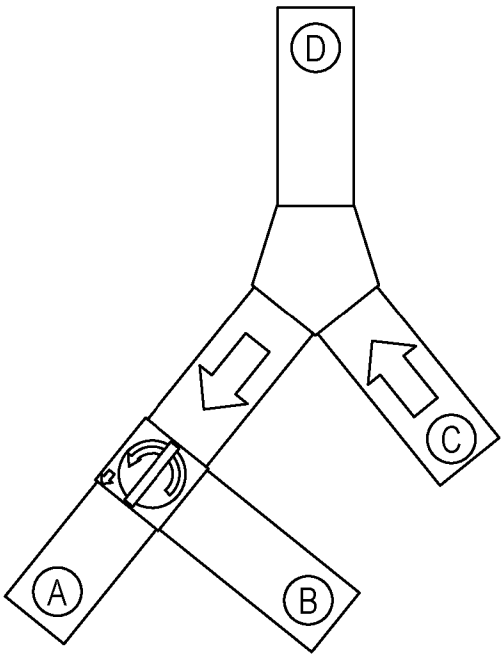

Figure 8a

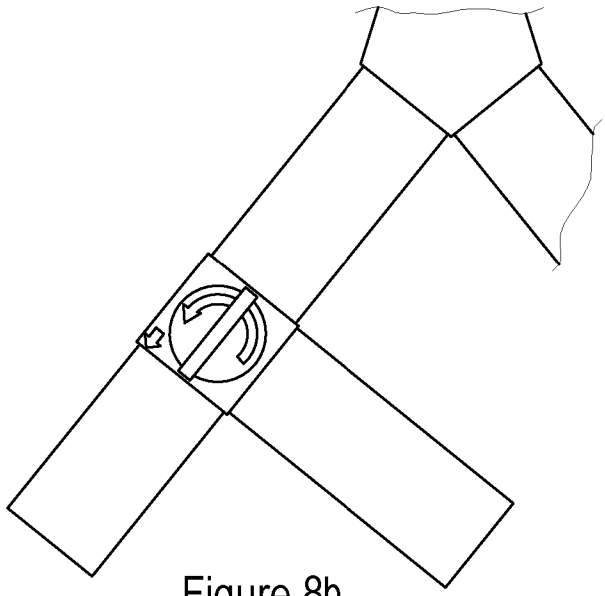

Figure 8b

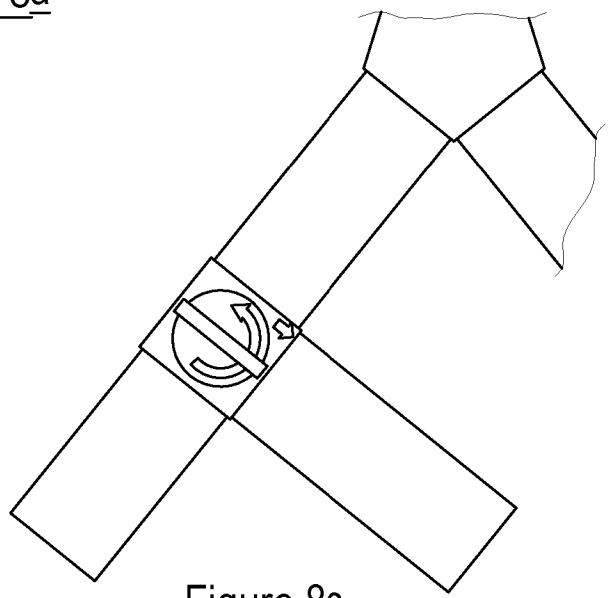

Figure 8c

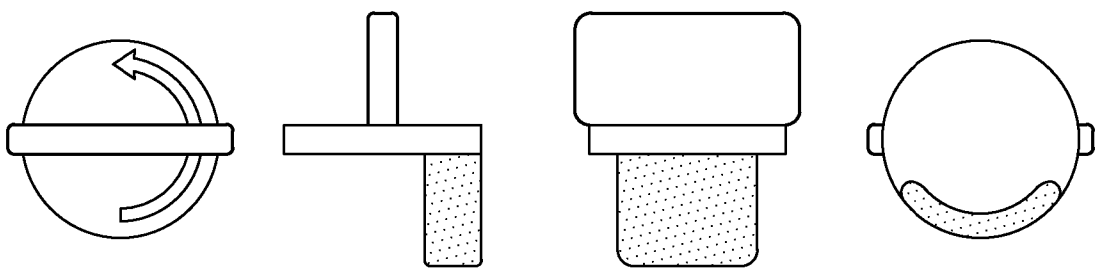

Figure 8d

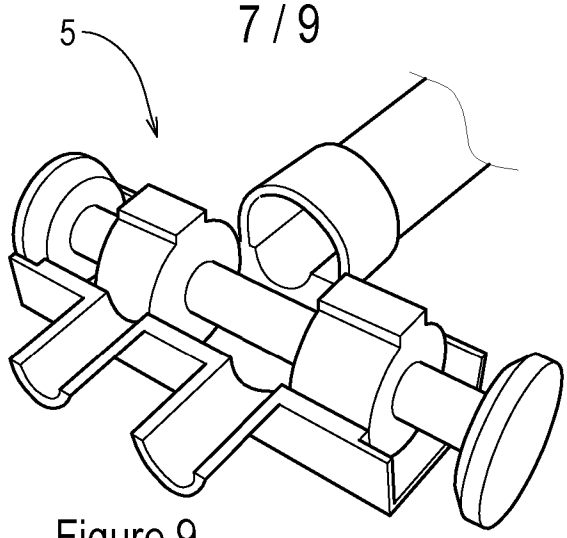

Figure 9

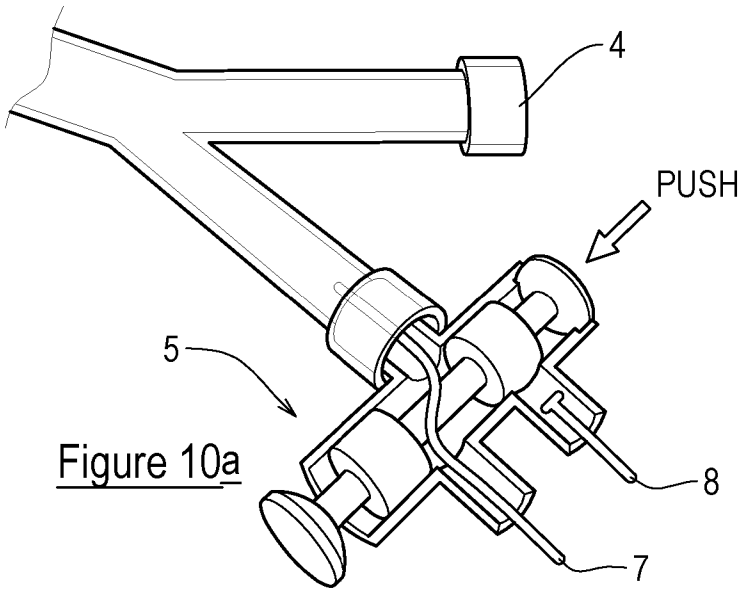

Figure 10a

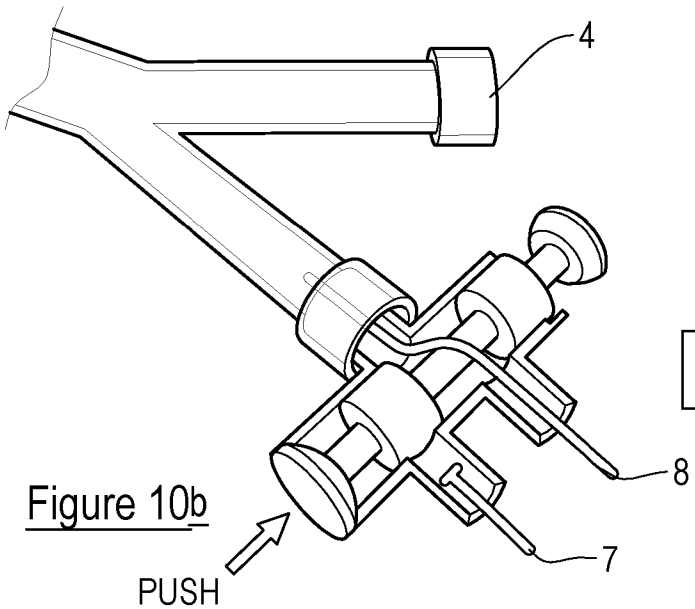

Figure 10b

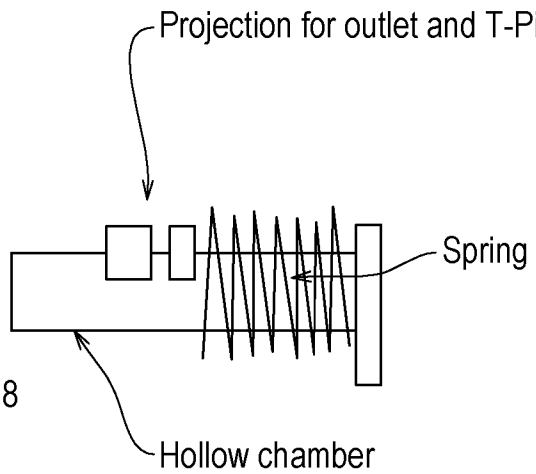

Figure 11

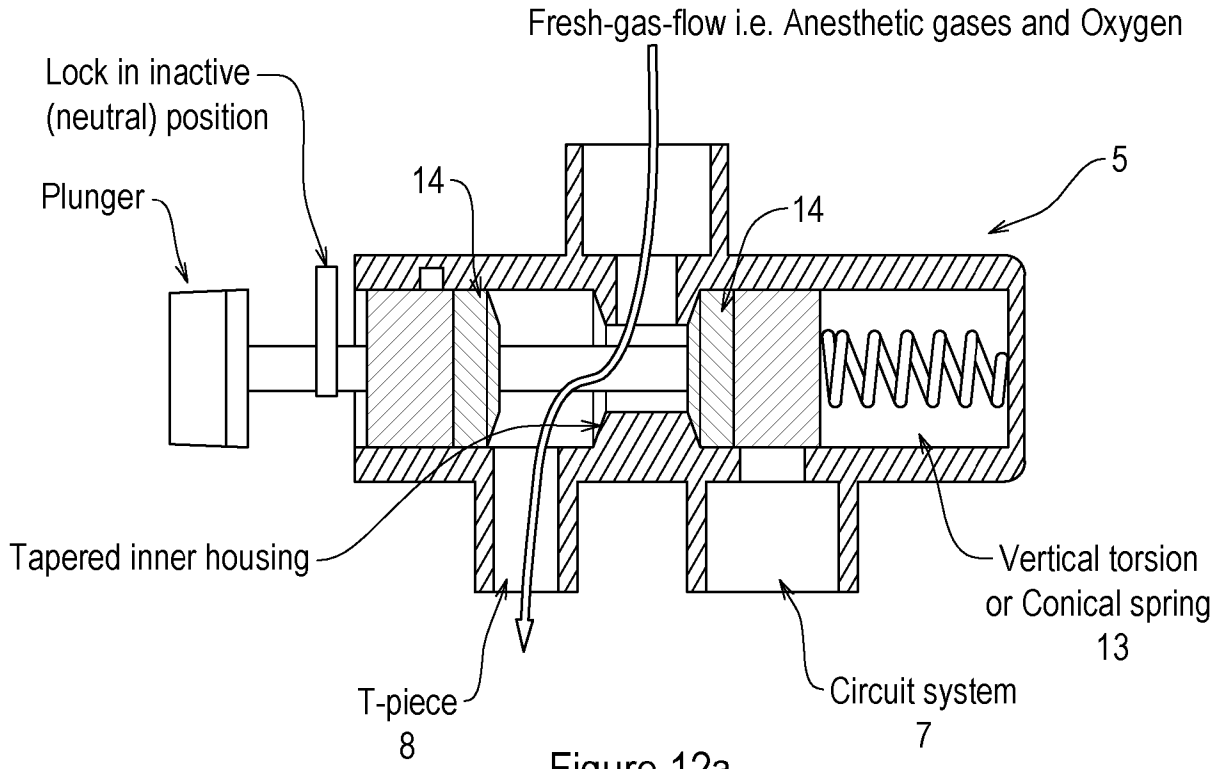

Figure 12a

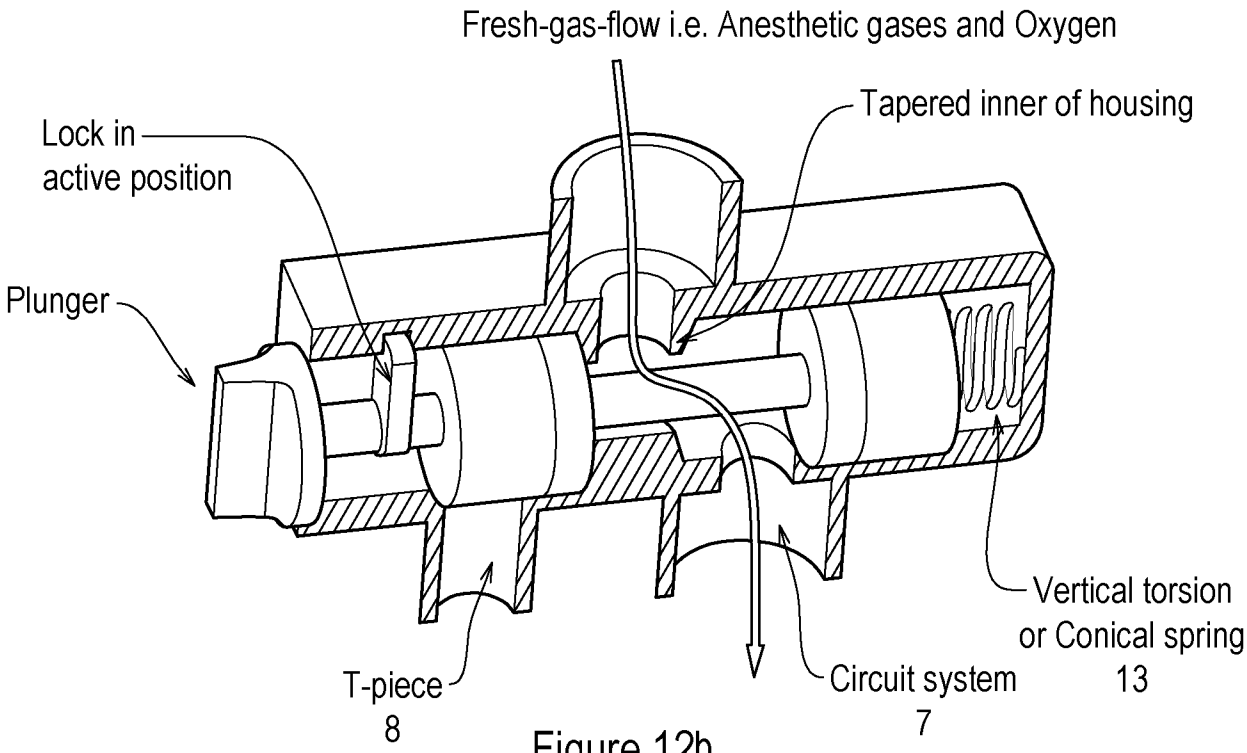

Figure 12b

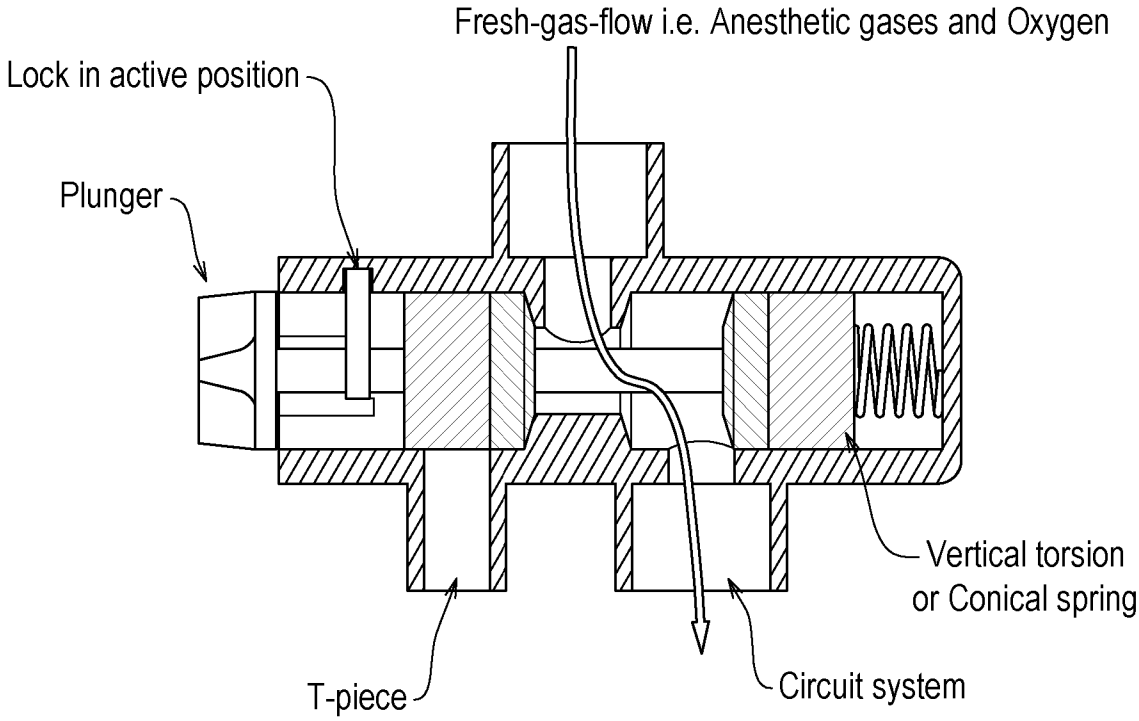

Figure 12c

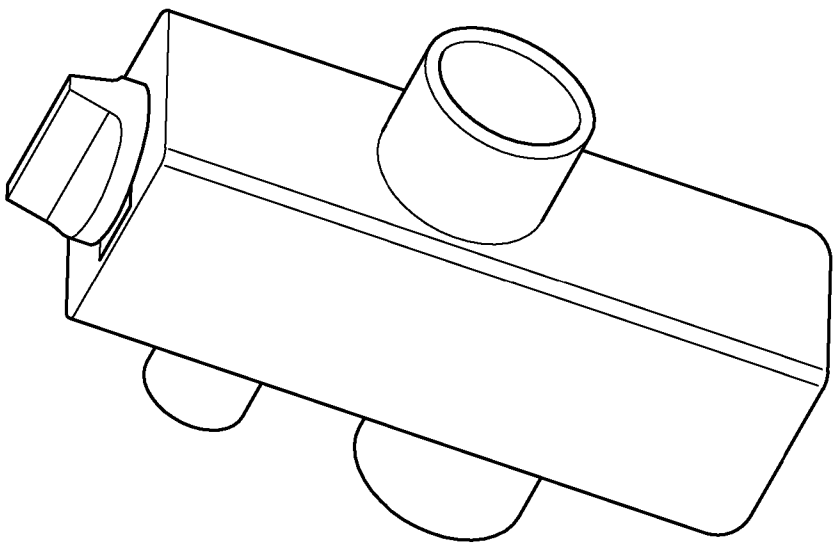

Figure 12d

INTERNATIONAL SEARCH REPORT

International application No
PCT/GB2017/051235

A. CLASSIFICATION OF SUBJECT MATTER
INV. A61M16/08 A61M16/20 A61M16/00 A61M16/01
ADD.

According to International Patent Classification (IPC) or to both national classification and IPC

B. FIELDS SEARCHED

Minimum documentation searched (classification system followed by classification symbols)
A61M

Documentation searched other than minimum documentation to the extent that such documents are included in the fields searched

Electronic data base consulted during the international search (name of data base and, where practicable, search terms used)
EPO-Internal, WPI Data

C. DOCUMENTS CONSIDERED TO BE RELEVANT

Category*	Citation of document, with indication, where appropriate, of the relevant passages	Relevant to claim No.
X	US 2002/117174 A1 (COLAS MARIE-JOSE [CA]) 29 August 2002 (2002-08-29) figures 1-8 paragraph [0015] - paragraph [0022]	1-18
X	US 2016/114113 A1 (HOMUTH JAMES [US] ET AL) 28 April 2016 (2016-04-28) figures 1-25 paragraph [0081]	1-18
X	US 2007/051367 A1 (MASHAK JAMES N [US] ET AL) 8 March 2007 (2007-03-08) figure 1 paragraph [0023] - paragraph [0029]	1-18

-/--

[X] Further documents are listed in the continuation of Box C.

[X] See patent family annex.

* Special categories of cited documents :

"A" document defining the general state of the art which is not considered to be of particular relevance

"E" earlier application or patent but published on or after the international filing date

"L" document which may throw doubts on priority claim(s) or which is cited to establish the publication date of another citation or other special reason (as specified)

"O" document referring to an oral disclosure, use, exhibition or other means

"P" document published prior to the international filing date but later than the priority date claimed

"T" later document published after the international filing date or priority date and not in conflict with the application but cited to understand the principle or theory underlying the invention

"X" document of particular relevance; the claimed invention cannot be considered novel or cannot be considered to involve an inventive step when the document is taken alone

"Y" document of particular relevance; the claimed invention cannot be considered to involve an inventive step when the document is combined with one or more other such documents, such combination being obvious to a person skilled in the art

"&" document member of the same patent family

Date of the actual completion of the international search	Date of mailing of the international search report
5 July 2017	17/07/2017

Name and mailing address of the ISA/	Authorized officer
European Patent Office, P.B. 5818 Patentlaan 2 NL - 2280 HV Rijswijk Tel. (+31-70) 340-2040, Fax: (+31-70) 340-3016	Liess, Helmar

1

Form PCT/ISA/210 (second sheet) (April 2005)

INTERNATIONAL SEARCH REPORT

International application No
PCT/GB2017/051235

C(Continuation). DOCUMENTS CONSIDERED TO BE RELEVANT

Category*	Citation of document, with indication, where appropriate, of the relevant passages	Relevant to claim No.
X	WO 2013/080079 A1 (KONINKL PHILIPS ELECTRONICS NV [NL]) 6 June 2013 (2013-06-06) figure 1 paragraph [0012]	1-18
X	US 4 991 576 A (HENKIN MELVYN L [US] ET AL) 12 February 1991 (1991-02-12) figures 1-3 column 6, line 18 - column 8, line 29	1-18
X	US 2005/247316 A1 (ORR JOSEPH A [US]) 10 November 2005 (2005-11-10) figures 1-8 paragraph [0047]	1-18

1

INTERNATIONAL SEARCH REPORT

Information on patent family members

International application No
PCT/GB2017/051235

Patent document cited in search report	Publication date	Patent family member(s)	Publication date
US 2002117174 A1	29-08-2002	BR 9917360 A	05-03-2002
		EP 1185326 A1	13-03-2002
		US 2002117174 A1	29-08-2002
		WO 0076569 A1	21-12-2000
US 2016114113 A1	28-04-2016	AU 2012358977 A1	24-07-2014
		CA 2859814 A1	27-06-2013
		EP 2793985 A1	29-10-2014
		JP 2015500733 A	08-01-2015
		KR 20140116878 A	06-10-2014
		US 2014005566 A1	02-01-2014
		US 2016114113 A1	28-04-2016
		WO 2013096495 A1	27-06-2013
US 2007051367 A1	08-03-2007	CN 1958087 A	09-05-2007
		DE 102006040886 A1	26-04-2007
		GB 2429653 A	07-03-2007
		GB 2473567 A	16-03-2011
		US 2007051367 A1	08-03-2007
WO 2013080079 A1	06-06-2013	CN 103957974 A	30-07-2014
		EP 2785402 A1	08-10-2014
		JP 2015502212 A	22-01-2015
		US 2014326242 A1	06-11-2014
		WO 2013080079 A1	06-06-2013
US 4991576 A	12-02-1991	AU 630893 B2	12-11-1992
		CA 1320095 C	13-07-1993
		EP 0396678 A1	14-11-1990
		ES 2016067 A6	01-10-1990
		JP H03501696 A	18-04-1991
		US 4991576 A	12-02-1991
		WO 9003820 A1	19-04-1990
US 2005247316 A1	10-11-2005	AU 2006244261 A1	16-11-2006
		CA 2607820 A1	16-11-2006
		EP 1883438 A2	06-02-2008
		JP 5410746 B2	05-02-2014
		JP 2008539904 A	20-11-2008
		NZ 590940 A	29-06-2012
		US 2005247316 A1	10-11-2005
		WO 2006121980 A2	16-11-2006