(12) INTERNATIONAL APPLICATION PUBLISHED UNDER THE PATENT COOPERATION TREATY (PCT)

(19) World Intellectual Property Organization
International Bureau

(43) International Publication Date
29 October 2015 (29.10.2015)

WIPO | PCT

(10) International Publication Number
WO 2015/164193 A1

(51) International Patent Classification:
A61B 17/32 (2006.01)

(21) International Application Number:
PCT/US2015/026322

(22) International Filing Date:
17 April 2015 (17.04.2015)

(25) Filing Language: English

(26) Publication Language: English

(30) Priority Data:
62/176,880 22 April 2014 (22.04.2014) US
14/688,692 16 April 2015 (16.04.2015) US

(71) Applicant: **ETHICON ENDO-SURGERY, INC.** [US/US]; 4545 Creek Road, Cincinnati, Ohio 45242 (US).

(72) Inventors: **ALDRIDGE, Jeffrey L.**; 106 W. Concord Drive, Lebanon, Ohio 45036 (US). **DICKERSON, Benjamin D.**; 3446 Berry Avenue, Cincinnati, Ohio 45208 (US). **FALLER, Craig N.**; 5690 East Day Circle, Milford, Ohio 45150 (US). **FOX, William D.**; 104 Regatta Drive, New Richmond, Ohio 45157 (US). **MONROE, David A.**; 514 Lila Avenue, Milford, Ohio 45150 (US). **STOKES, Michael J.**; 8 Sleepy Hollow Lane, Cincinnati, Ohio 45244 (US). **WEISENBURGH, II, William B.**; 974 Airymeadows Drive, Maineville, Ohio 45039 (US). **WORRELL, Barry C.**; 1647 Lago Mar Drive, Centerville, Ohio 45458 (US). **OLSON, William A.**; 4067 Belle Terrace Lane, Lebanon, Ohio 45036 (US). **STULEN, Foster B.**; 6245 Bridgewater Court, Mason, Ohio 45040 (US).

(74) Agents: **PLANTZ, Bernard F.** et al.; Johnson & Johnson, One Johnson & Johnson Plaza, New Brunswick, New Jersey 08933 (US).

(81) Designated States *(unless otherwise indicated, for every kind of national protection available)*: AE, AG, AL, AM, AO, AT, AU, AZ, BA, BB, BG, BH, BN, BR, BW, BY, BZ, CA, CH, CL, CN, CO, CR, CU, CZ, DE, DK, DM, DO, DZ, EC, EE, EG, ES, FI, GB, GD, GE, GH, GM, GT, HN, HR, HU, ID, IL, IN, IR, IS, JP, KE, KG, KN, KP, KR, KZ, LA, LC, LK, LR, LS, LU, LY, MA, MD, ME, MG, MK, MN, MW, MX, MY, MZ, NA, NG, NI, NO, NZ, OM, PA, PE, PG, PH, PL, PT, QA, RO, RS, RU, RW, SA, SC, SD, SE, SG, SK, SL, SM, ST, SV, SY, TH, TJ, TM, TN, TR, TT, TZ, UA, UG, US, UZ, VC, VN, ZA, ZM, ZW.

(84) Designated States *(unless otherwise indicated, for every kind of regional protection available)*: ARIPO (BW, GH, GM, KE, LR, LS, MW, MZ, NA, RW, SD, SL, ST, SZ, TZ, UG, ZM, ZW), Eurasian (AM, AZ, BY, KG, KZ, RU, TJ, TM), European (AL, AT, BE, BG, CH, CY, CZ, DE, DK, EE, ES, FI, FR, GB, GR, HR, HU, IE, IS, IT, LT, LU, LV, MC, MK, MT, NL, NO, PL, PT, RO, RS, SE, SI, SK, SM, TR), OAPI (BF, BJ, CF, CG, CI, CM, GA, GN, GQ, GW, KM, ML, MR, NE, SN, TD, TG).

Declarations under Rule 4.17:

— *as to the identity of the inventor (Rule 4.17(i))*

— *as to applicant's entitlement to apply for and be granted a patent (Rule 4.17(ii))*

[Continued on next page]

(54) Title: ULTRASONIC SURGICAL INSTRUMENT WITH END EFFECTOR HAVING RESTRICTED ARTICULATION

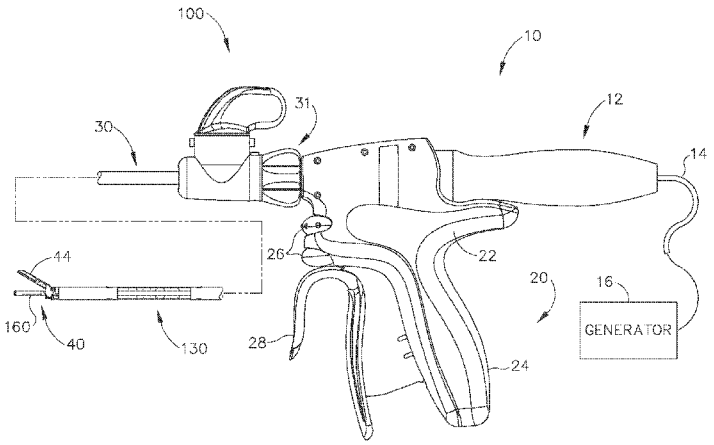

Fig.1

(57) Abstract: An apparatus comprises a body assembly, a shaft, an acoustic waveguide, an articulation section, an end effector, and an articulation drive assembly. The shaft extends distally from the body assembly and defines a longitudinal axis. The acoustic waveguide comprises a flexible portion. The articulation section is coupled with the shaft. A portion of the articulation section encompasses the flexible portion of the waveguide. The articulation section comprises a plurality of body portions aligned along the longitudinal axis and a flexible locking member. The flexible locking member is operable to secure the body portions in relation to each other and in relation to the shaft. The end effector comprises an ultrasonic blade in acoustic communication with the waveguide. The articulation drive assembly is operable to drive articulation of the articulation section to thereby deflect the end effector from the longitudinal axis.

WO 2015/164193 A1

— *as to the applicant's entitlement to claim the priority of the earlier application (Rule 4.17(iii))*

Published:

— *with international search report (Art. 21(3))*

ULTRASONIC SURGICAL INSTRUMENT WITH END EFFECTOR HAVING RESTRICTED ARTICULATION

PRIORITY

[0001] This application claims priority to U.S. Provisional Pat. App. No. 62/176,880, entitled "Ultrasonic Surgical Device with Articulating End Effector," filed April 22, 2014, the disclosure of which is incorporated by reference herein.

BACKGROUND

[0002] A variety of surgical instruments include an end effector having a blade element that vibrates at ultrasonic frequencies to cut and/or seal tissue (e.g., by denaturing proteins in tissue cells). These instruments include piezoelectric elements that convert electrical power into ultrasonic vibrations, which are communicated along an acoustic waveguide to the blade element. The precision of cutting and coagulation may be controlled by the surgeon's technique and adjusting the power level, blade edge, tissue traction and blade pressure.

[0003] Examples of ultrasonic surgical instruments include the HARMONIC ACE® Ultrasonic Shears, the HARMONIC WAVE® Ultrasonic Shears, the HARMONIC FOCUS® Ultrasonic Shears, and the HARMONIC SYNERGY® Ultrasonic Blades, all by Ethicon Endo-Surgery, Inc. of Cincinnati, Ohio. Further examples of such devices and related concepts are disclosed in U.S. Pat. No. 5,322,055, entitled "Clamp Coagulator/Cutting System for Ultrasonic Surgical Instruments," issued June 21, 1994, the disclosure of which is incorporated by reference herein; U.S. Pat. No. 5,873,873, entitled "Ultrasonic Clamp Coagulator Apparatus Having Improved Clamp Mechanism," issued February 23, 1999, the disclosure of which is incorporated by reference herein; U.S. Pat. No. 5,980,510, entitled "Ultrasonic Clamp Coagulator Apparatus Having Improved Clamp Arm Pivot Mount," filed October 10, 1997, the disclosure of which is incorporated by reference herein; U.S. Pat. No. 6,325,811, entitled "Blades with Functional Balance Asymmetries for use with Ultrasonic Surgical Instruments," issued

December 4, 2001, the disclosure of which is incorporated by reference herein; U.S. Pat. No. 6,773,444, entitled "Blades with Functional Balance Asymmetries for Use with Ultrasonic Surgical Instruments," issued August 10, 2004, the disclosure of which is incorporated by reference herein; and U.S. Pat. No. 6,783,524, entitled "Robotic Surgical Tool with Ultrasound Cauterizing and Cutting Instrument," issued August 31, 2004, the disclosure of which is incorporated by reference herein.

[0004] Still further examples of ultrasonic surgical instruments are disclosed in U.S. Pub. No. 2006/0079874, entitled "Tissue Pad for Use with an Ultrasonic Surgical Instrument," published April 13, 2006, the disclosure of which is incorporated by reference herein; U.S. Pub. No. 2007/0191713, entitled "Ultrasonic Device for Cutting and Coagulating," published August 16, 2007, the disclosure of which is incorporated by reference herein; U.S. Pub. No. 2007/0282333, entitled "Ultrasonic Waveguide and Blade," published December 6, 2007, the disclosure of which is incorporated by reference herein; U.S. Pub. No. 2008/0200940, entitled "Ultrasonic Device for Cutting and Coagulating," published August 21, 2008, the disclosure of which is incorporated by reference herein; U.S. Pat. No. 8,623,027, entitled "Ergonomic Surgical Instruments," issued January 7, 2014, the disclosure of which is incorporated by reference herein; U.S. Pub. No. 2010/0069940, entitled "Ultrasonic Device for Fingertip Control," published March 18, 2010, the disclosure of which is incorporated by reference herein; and U.S. Pat. No. 8,461,744, entitled "Rotating Transducer Mount for Ultrasonic Surgical Instruments," published January 20, 2011, the disclosure of which is incorporated by reference herein; and U.S. Pat. No. 8,591,536, entitled "Ultrasonic Surgical Instrument Blades," published February 2, 2012, the disclosure of which is incorporated by reference herein.

[0005] Some ultrasonic surgical instruments may include a cordless transducer such as that disclosed in U.S. Pub. No. 2012/0112687, entitled "Recharge System for Medical Devices," published May 10, 2012, the disclosure of which is incorporated by reference herein; U.S. Pub. No. 2012/0116265, entitled "Surgical Instrument with Charging Devices," published May 10, 2012, the disclosure of which is incorporated by reference herein; and/or U.S. Pat. App. No. 61/410,603, filed November 5, 2010, entitled "Energy-Based Surgical Instruments," the disclosure of which is incorporated by reference herein.

[0006] Additionally, some ultrasonic surgical instruments may include an articulating shaft section and/or a bendable ultrasonic waveguide. Examples of such ultrasonic surgical instruments are disclosed in U.S. Pat. No. 5,897,523, entitled "Articulating Ultrasonic Surgical Instrument," issued April 27, 1999, the disclosure of which is incorporated by reference herein; U.S. Pat. No. 5,989,264, entitled "Ultrasonic Polyp Snare," issued November 23, 1999, the disclosure of which is incorporated by reference herein; U.S. Pat. No. 6,063,098, entitled "Articulable Ultrasonic Surgical Apparatus," issued May 16, 2000, the disclosure of which is incorporated by reference herein; U.S. Pat. No. 6,090,120, entitled "Articulating Ultrasonic Surgical Instrument," issued July 18, 2000, the disclosure of which is incorporated by reference herein; U.S. Pat. No. 6,454,782, entitled "Actuation Mechanism for Surgical Instruments," issued September 24, 2002, the disclosure of which is incorporated by reference herein; U.S. Pat. No. 6,589,200, entitled "Articulating Ultrasonic Surgical Shears," issued July 8, 2003, the disclosure of which is incorporated by reference herein; U.S. Pat. No. 6,752,815, entitled "Method and Waveguides for Changing the Direction of Longitudinal Vibrations," issued June 22, 2004, the disclosure of which is incorporated by reference herein; U.S. Pat. No. 7,135,030, entitled "Articulating Ultrasonic Surgical Shears," issued November 14, 2006; U.S. Pat. No. 7,621,930, entitled "Ultrasound Medical Instrument Having a Medical Ultrasonic Blade," issued November 24, 2009, the disclosure of which is incorporated by reference herein; U.S. Pub. No. 2014/0005701, published January 2, 2014, entitled "Surgical Instruments with Articulating Shafts," the disclosure of which is incorporated by reference herein; U.S. Pub. No. 2014/005703, entitled "Surgical Instruments with Articulating Shafts," published January 2, 2014, the disclosure of which is incorporated by reference herein; U.S. Pub. No. 2014/0114334, entitled "Flexible Harmonic Waveguides/Blades for Surgical Instruments," published April 24, 2014, the disclosure of which is incorporated by reference herein; U.S. Pub. No. 2015/0080924, entitled ""Articulation Features for Ultrasonic Surgical Instrument," published March 19, 2015, the disclosure of which is incorporated by reference herein; and U.S. Pat. App. No. 14/258,179, entitled Ultrasonic Surgical Device with Articulating End Effector," filed April 22, 2014, the disclosure of which is incorporated by reference herein.

[0007] While several surgical instruments and systems have been made and used, it is believed that no one prior to the inventors has made or used the invention described in the appended claims.

BRIEF DESCRIPTION OF THE DRAWINGS

[0008] While the specification concludes with claims which particularly point out and distinctly claim this technology, it is believed this technology will be better understood from the following description of certain examples taken in conjunction with the accompanying drawings, in which like reference numerals identify the same elements and in which:

[0009] FIG. 1 depicts a side elevational view of an exemplary ultrasonic surgical instrument;

[00010] FIG. 2 depicts a perspective view of an articulation section of a shaft assembly and an end effector of the surgical instrument of FIG. 1;

[00011] FIG. 3 depicts an exploded perspective view of an articulation section of the shaft assembly of FIG. 2;

[00012] FIG. 4 depicts a cross-sectional side view of the shaft assembly and end effector of FIG. 2;

[00013] FIG. 5 depicts a top plan view of the shaft assembly and end effector of FIG. 2;

[00014] FIG. 6A depicts a cross-sectional top view of the shaft assembly and end effector of FIG. 2 in a straight configuration;

[00015] FIG. 6B depicts a cross-sectional top view of the shaft assembly and end effector of FIG. 2 in an articulated configuration;

[00016] FIG. 7 depicts a partially exploded perspective view of the shaft assembly and end effector of FIG. 2;

[00017] FIG. 8 depicts a perspective view of a distal collar and a drive cable of the shaft assembly of FIG. 2;

[00018] FIG. 9 depicts a partially exploded perspective view of an articulation control assembly of the instrument of FIG. 1;

[00019] FIG. 10A depicts a side elevational view of an exemplary alternative end effector and the distal portion of a shaft assembly, configured for incorporation in the instrument of FIG. 1, with a clamp arm of the end effector in a closed position, and with an outer sheath shown in cross-section to reveal components within the outer sheath;

[00020] FIG. 10B depicts a side elevational view of the shaft assembly and end effector of FIG. 10A, with the clamp arm moved to a partially open position;

[00021] FIG. 10C depicts a side elevational view of the shaft assembly and end effector of FIG. 10A, with the clamp arm moved to a fully open position;

[00022] FIG. 11A depicts a side elevational view of another exemplary alternative end effector and the distal portion of a shaft assembly and end effector, configured for incorporation in the instrument of FIG. 1, with a clamp arm of the end effector in a closed position, and with the shaft assembly shown in side cross-section;

[00023] FIG. 11B depicts a side elevational view of the shaft assembly and end effector of FIG. 11A, with the clamp arm moved to an open position, and with the shaft assembly shown in side cross-section;

[00024] FIG. 12A depicts a top plan view of the shaft assembly and end effector of FIG. 11A in a substantially straight configuration, with the shaft assembly shown in top cross-section;

[00025] FIG. 12B depicts a top plan view of the shaft assembly and end effector of FIG. 11A in an articulated configuration, with the shaft assembly shown in top cross-section;

[00026] FIG. 13A depicts a side elevational view of yet another exemplary alternative end effector and the distal portion of a shaft assembly and end effector, configured for incorporation in the instrument of FIG. 1, with a clamp arm of the end effector in a closed position, and with the shaft assembly shown in side cross-section;

[00027] FIG. 13B depicts a side elevational view of the shaft assembly and end effector of

FIG. 13A, with the clamp arm moved to an open position, and with the shaft assembly shown in side cross-section;

[00028] FIG. 14A depicts a top plan view of the shaft assembly and end effector of FIG. 13A in a substantially straight configuration, with the shaft assembly shown in top cross-section;

[00029] FIG. 14B depicts a top plan view of the shaft assembly and end effector of FIG. 13A in an articulated configuration, with the shaft assembly shown in top cross-section;

[00030] FIG. 15A depicts a side elevational view of yet another exemplary alternative end effector and the distal portion of a shaft assembly and end effector, configured for incorporation in the instrument of FIG. 1, with a clamp arm of the end effector in a closed position, and with the shaft assembly shown in side cross-section;

[00031] FIG. 15B depicts a side elevational view of the shaft assembly and end effector of FIG. 15A, with the clamp arm moved to an open position, and with the shaft assembly shown in side cross-section;

[00032] FIG. 16A depicts a top plan view of the shaft assembly and end effector of FIG. 15A in a substantially straight position, with the shaft assembly shown in top cross-section;

[00033] FIG. 16B depicts a top plan view of the shaft assembly and end effector of FIG. 15A moved into a bent configuration, with the shaft assembly shown in top cross-section;

[00034] FIG. 17A depicts a perspective view of yet another exemplary alternative end effector and the distal portion of a shaft assembly and end effector, configured for incorporation in the instrument of FIG. 1, with a clamp arm of the end effector in a closed position;

[00035] FIG. 17B depicts a perspective view of the shaft assembly and end effector of FIG. 17A, with the clamp arm moved to an open position;

[00036] FIG. 18 depicts a side cross-sectional view of the shaft assembly and end effector of FIG. 17A, with the clamp arm in the open position;

[00037] FIG. 19 depicts a front cross-sectional end view of yet another exemplary alternative shaft assembly and end effector, configured for incorporation in the instrument of FIG. 1;

[00038] FIG. 20 depicts a front cross-sectional end view of yet another exemplary alternative shaft assembly and end effector, configured for incorporation in the instrument of FIG. 1;

[00039] FIG. 21 depicts a front cross-sectional end view of yet another exemplary alternative shaft assembly and end effector, configured for incorporation in the instrument of FIG. 1;

[00040] FIG. 22 depicts a front cross-sectional end view of yet another exemplary alternative shaft assembly and end effector, configured for incorporation in the instrument of FIG. 1;

[00041] FIG. 23 depicts a front cross-sectional end view of yet another exemplary alternative shaft assembly and end effector, configured for incorporation in the instrument of FIG. 1;

[00042] FIG. 24 depicts a front cross-sectional end view of yet another exemplary alternative shaft assembly and end effector, configured for incorporation in the instrument of FIG. 1;

[00043] FIG. 25 depicts a front cross-sectional end view of yet another exemplary alternative shaft assembly and end effector, configured for incorporation in the instrument of FIG. 1;

[00044] FIG. 26 depicts a front cross-sectional end view of yet another exemplary alternative shaft assembly and end effector, configured for incorporation in the instrument of FIG. 1;

[00045] FIG. 27 depicts a front cross-sectional end view of yet another exemplary alternative shaft assembly and end effector, configured for incorporation in the instrument of FIG. 1;

[00046] FIG. 28 depicts a front end view of a clamp arm coupled with an exemplary push/pull cable assembly configured for incorporation in any of the shaft assemblies and end effectors described herein;

[00047] FIG. 29 depicts a side elevational view of the push/pull cable assembly of FIG. 28;

[00048] FIG. 30 depicts a perspective view of an exemplary alternative push/pull cable assembly configured for incorporation in any of the shaft assemblies and end effectors described herein;

[00049] FIG. 31 depicts a perspective view of another exemplary alternative push/pull cable configured for incorporation in any of the shaft assemblies and end effectors described herein;

[00050] FIG. 32 depicts a perspective view of an exemplary clamp configured for incorporation in any of the end effectors described herein;

[00051] FIG. 33A depicts a side elevational view of an end effector having the clamp arm of FIG. 32, with the clamp arm in a closed position;

[00052] FIG. 33B depicts a side elevational view of the end effector of FIG. 33A, with the clamp arm moved to an open position;

[00053] FIG. 34A depicts a cross-sectional top view of a distal portion of yet another exemplary alternative shaft assembly and end effector configured for incorporation in the instrument of FIG. 1, with the shaft assembly and end effector in a substantially straight configuration;

[00054] FIG. 34B depicts a cross-sectional top view of the shaft assembly and end effector of FIG. 34A moved into an articulated configuration;

[00055] FIG. 35 depicts a cross-sectional view of the shaft assembly of FIG. 34A, taken along line 35-35 of FIG. 34A;

[00056] FIG. 36 depicts a side elevational view of an exemplary relationship between articulation bands and the clamp arm of the shaft assembly and end effector of FIG. 34A;

[00057] FIG. 37 depicts a side elevational view of another exemplary relationship between articulation bands and the clamp arm of the shaft assembly and end effector of FIG. 34A;

[00058] FIG. 38 depicts a cross-sectional side view of yet another exemplary alternative shaft assembly and end effector configured for incorporation in the instrument of FIG. 1;

[00059] FIG. 39 depicts an exploded perspective view of the shaft assembly of FIG. 38;

[00060] FIG. 40 depicts a detailed perspective view of yet another exemplary alternative shaft and end effector assembly configured for incorporation in the instrument of FIG. 1;

[00061] FIG. 41 depicts a perspective view of components of yet another exemplary alternative shaft assembly configured for incorporation in the instrument of FIG. 1;

[00062] FIG. 42A depicts a top plan view of the shaft assembly of FIG. 41 in a straight configuration;

[00063] FIG. 42B depicts a top plan view of the shaft assembly of FIG. 41 in an articulated configuration;

[00064] FIG. 43 depicts a perspective view of an exemplary alternative waveguide configured for incorporation in the instrument of FIG. 1;

[00065] FIG. 44 depicts a cross-sectional top view of a flange of the waveguide of FIG. 43;

[00066] FIG. 45 depicts a detailed perspective view of the flange of FIG. 44;

[00067] FIG. 46 depicts a cross-sectional end view of the flange of FIG. 44;

[00068] FIG. 47 depicts a detailed perspective view of an exemplary alternative flange;

[00069] FIG. 48 depicts a cross-sectional end view of the flange of FIG. 47;

[00070] FIG. 49 depicts a detailed perspective view of another exemplary alternative flange;

[00071] FIG. 50 depicts a cross-sectional end view of the flange of FIG. 49;

[00072] FIG. 51 depicts a side elevational view of an exemplary alternative ultrasonic surgical instrument;

[00073] FIG. 52 depicts an enlarged side elevational view of an exemplary articulation control assembly of the instrument of FIG. 51, with a housing of the assembly shown in cross-section;

[00074] FIG. 53 depicts a top plan view of the articulation control assembly of FIG. 52, with the housing of the assembly shown in cross-section, and the end effector of the instrument of FIG. 51;

[00075] FIG. 54 depicts a side elevational view of an exemplary alternative ultrasonic surgical instrument;

[00076] FIG. 55A depicts a perspective view of an articulation section of an exemplary alternative shaft assembly and an end effector that may be incorporated into the instrument of FIG. 1;

[00077] FIG. 55B depicts a perspective view of the articulation section of the shaft assembly and the end effector of FIG. 55A with certain elements omitted to show greater detail;

[00078] FIG. 55C depicts a perspective view of the articulation section of the shaft assembly and the end effector of FIG. 55A with certain elements omitted to show greater detail;

[00079] FIG. 55D depicts a perspective view of the articulation section of the shaft assembly and the end effector of FIG. 55A with certain elements omitted to show greater detail;

[00080] FIG. 56 depicts an exploded perspective view of the articulation section of FIG. 55A;

[00081] FIG. 57 depicts a perspective view of a retention collar of the articulation section of FIG. 55A;

[00082] FIG. 58 depicts a top elevational view of the retention collar of FIG. 55A;

[00083] FIG. 59 depicts a perspective view of a flexible locking feature of the articulation section of FIG. 55A;

[00084] FIG. 60 depicts a front elevational view of the flexible locking feature of FIG. 55A;

[00085] FIG. 61 depicts a perspective view of body portions of the articulation section of FIG. 55A longitudinally aligned with one another;

[00086] FIG. 62 depicts a perspective view of the intermediate body portion of FIG. 55A;

[00087] FIG. 63 depicts a front elevational view of the intermediate body portion of FIG. 55A;

[00088] FIG. 64 depicts a perspective view of the distal body portion of FIG. 55A;

[00089] FIG. 65 depicts a side elevational view of the distal body portion of FIG. 55A;

[00090] FIG. 66 depicts a perspective view of the proximal body portion of FIG. 55A;

[00091] FIG. 67 depicts a cross sectional view of the articulation section of FIG. 55A across the intermediate body portion;

[00092] FIG. 68 depicts a top elevational view of the articulation section of the shaft assembly and the end effector of the surgical instrument of FIG. 55A;

[00093] FIG. 69A depicts a cross sectional top view of the articulation section of the shaft assembly of the surgical instrument of FIG. 55A, with the articulation section in a non-articulated state;

[00094] FIG. 69B depicts a cross sectional top view of the articulation section of the shaft assembly of the surgical instrument of FIG. 55A, with the articulation section in an articulated state;

[00095] FIG. 70 depicts a perspective view of an exemplary distal node bumper that may be incorporated into the shaft assembly of FIG. 2;

[00096] FIG. 71 depicts a front elevational view of the distal node bumper of FIG. 70;

[00097] FIG. 72 depicts a front elevational view of tissue clamped between an exemplary keyhole blade and clamp arm assembly that may be incorporated into the end effector of FIG. 2, in an on-plane configuration;

[00098] FIG. 73 depicts a front elevational view of tissue clamped between the keyhole blade and clamp arm assembly of FIG. 71, in a first off-plane configuration; and

[00099] FIG. 74 depicts a front elevational view of tissue clamped between the keyhole blade and clamp arm assembly of FIG. 71, in a second off-plane configuration.

[000100] The drawings are not intended to be limiting in any way, and it is contemplated that various embodiments of the technology may be carried out in a variety of other ways, including those not necessarily depicted in the drawings. The accompanying drawings incorporated in and forming a part of the specification illustrate several aspects of the present technology, and together with the description serve to explain the principles of the technology; it being understood, however, that this technology is not limited to the precise arrangements shown.

DETAILED DESCRIPTION

[000101] The following description of certain examples of the technology should not be used to limit its scope. Other examples, features, aspects, embodiments, and advantages of the technology will become apparent to those skilled in the art from the following description, which is by way of illustration, one of the best modes contemplated for carrying out the technology. As will be realized, the technology described herein is capable of other different and obvious aspects, all without departing from the technology. Accordingly, the drawings and descriptions should be regarded as illustrative in nature and not restrictive.

[000102] It is further understood that any one or more of the teachings, expressions, embodiments, examples, etc. described herein may be combined with any one or more of the other teachings, expressions, embodiments, examples, etc. that are described herein. The following-described teachings, expressions, embodiments, examples, etc. should therefore not be viewed in isolation relative to each other. Various suitable ways in

which the teachings herein may be combined will be readily apparent to those of ordinary skill in the art in view of the teachings herein. Such modifications and variations are intended to be included within the scope of the claims.

[000103] For clarity of disclosure, the terms "proximal" and "distal" are defined herein relative to a human or robotic operator of the surgical instrument. The term "proximal" refers the position of an element closer to the human or robotic operator of the surgical instrument and further away from the surgical end effector of the surgical instrument. The term "distal" refers to the position of an element closer to the surgical end effector of the surgical instrument and further away from the human or robotic operator of the surgical instrument.

[000104] I. Exemplary Ultrasonic Surgical Instrument

[000105] FIG. 1 shows an exemplary ultrasonic surgical instrument (10). At least part of instrument (10) may be constructed and operable in accordance with at least some of the teachings of any of the various patents, patent application publications, and patent applications that are cited herein. As described therein and as will be described in greater detail below, instrument (10) is operable to cut tissue and seal or weld tissue (e.g., a blood vessel, etc.) substantially simultaneously. It should also be understood that instrument (10) may have various structural and functional similarities with the HARMONIC ACE® Ultrasonic Shears, the HARMONIC WAVE® Ultrasonic Shears, the HARMONIC FOCUS® Ultrasonic Shears, and/or the HARMONIC SYNERGY® Ultrasonic Blades. Furthermore, instrument (10) may have various structural and functional similarities with the devices taught in any of the other references that are cited and incorporated by reference herein.

[000106] To the extent that there is some degree of overlap between the teachings of the references cited herein, the HARMONIC ACE® Ultrasonic Shears, the HARMONIC WAVE® Ultrasonic Shears, the HARMONIC FOCUS® Ultrasonic Shears, and/or the HARMONIC SYNERGY® Ultrasonic Blades, and the following teachings relating to instrument (10), there is no intent for any of the description herein to be presumed as admitted prior art. Several teachings herein will in fact go beyond the scope of the

teachings of the references cited herein and the HARMONIC ACE® Ultrasonic Shears, the HARMONIC WAVE® Ultrasonic Shears, the HARMONIC FOCUS® Ultrasonic Shears, and the HARMONIC SYNERGY® Ultrasonic Blades.

[000107] Instrument (10) of the present example comprises a handle assembly (20), a shaft assembly (30), and an end effector (40). Handle assembly (20) comprises a body (22) including a pistol grip (24) and a pair of buttons (26). Handle assembly (20) also includes a trigger (28) that is pivotable toward and away from pistol grip (24). It should be understood, however, that various other suitable configurations may be used, including but not limited to a scissor grip configuration. End effector (40) includes an ultrasonic blade (160) and a pivoting clamp arm (44). Clamp arm (44) is coupled with trigger (28) such that clamp arm (44) is pivotable toward ultrasonic blade (160) in response to pivoting of trigger (28) toward pistol grip (24); and such that clamp arm (44) is pivotable away from ultrasonic blade (160) in response to pivoting of trigger (28) away from pistol grip (24). Various suitable ways in which clamp arm (44) may be coupled with trigger (28) will be apparent to those of ordinary skill in the art in view of the teachings herein. In some versions, one or more resilient members are used to bias clamp arm (44) and/or trigger (28) to the open position shown in FIG. 1.

[000108] An ultrasonic transducer assembly (12) extends proximally from body (22) of handle assembly (20). Transducer assembly (12) is coupled with a generator (16) via a cable (14), such that transducer assembly (12) receives electrical power from generator (16). Piezoelectric elements in transducer assembly (12) convert that electrical power into ultrasonic vibrations. Generator (16) may include a power source and control module that is configured to provide a power profile to transducer assembly (12) that is particularly suited for the generation of ultrasonic vibrations through transducer assembly (12). By way of example only, generator (16) may comprise a GEN 300 sold by Ethicon Endo-Surgery, Inc. of Cincinnati, Ohio. In addition or in the alternative, generator (16) may be constructed in accordance with at least some of the teachings of U.S. Pat. No. 8,986,302, entitled "Surgical Generator for Ultrasonic and Electrosurgical Devices," published April 14, 2011, the disclosure of which is incorporated by reference herein. It should also be understood that at least some of the functionality of generator (16) may be

integrated into handle assembly (20), and that handle assembly (20) may even include a battery or other on-board power source such that cable (14) is omitted. Still other suitable forms that generator (16) may take, as well as various features and operabilities that generator (16) may provide, will be apparent to those of ordinary skill in the art in view of the teachings herein.

[000109] A. Exemplary End Effector and Acoustic Drivetrain

[000110] As best seen in FIGS. 2-4, end effector (40) of the present example comprises clamp arm (44) and ultrasonic blade (160). Clamp arm (44) includes a clamp pad (46) that is secured to the underside of clamp arm (44), facing blade (160). Clamp pad (46) may comprise polytetrafluoroethylene (PTFE) and/or any other suitable material(s). Clamp arm (44) is pivotally secured to a distally projecting tongue (43) of an upper distal shaft element (172), which is fixedly secured within a distal portion of a distal outer sheath (33). Clamp arm (44) is operable to selectively pivot toward and away from blade (160) to selectively clamp tissue between clamp arm (44) and blade (160). A pair of arms (156) extend transversely from clamp arm (44) and are pivotally secured to a lower distal shaft element (170), which is slidably disposed within the distal portion of distal outer sheath (33).

[000111] As best seen in FIGS. 7-8, a cable (174) is secured to lower distal shaft element (170). Cable (174) is operable to translate longitudinally relative to an articulation section (130) of shaft assembly (30) to selectively pivot clamp arm (44) toward and away from blade (160). In particular, cable (174) is coupled with trigger (28) such that cable (174) translates proximally in response to pivoting of trigger (28) toward pistol grip (24), and such that clamp arm (44) thereby pivots toward blade (160) in response to pivoting of trigger (28) toward pistol grip (24). In addition, cable (174) translates distally in response to pivoting of trigger (28) away from pistol grip (24), such that clamp arm (44) pivots away from blade (160) in response to pivoting of trigger (28) away from pistol grip (24). Clamp arm (44) may be biased toward the open position, such that (at least in some instances) the operator may effectively open clamp arm (44) by releasing a grip on trigger (28).

[000112] As shown in FIGS. 7-8, cable (174) is secured to a proximal end of lower distal shaft element (170). Lower distal shaft element (170) comprises a pair of distal flanges (171, 173) extending from a semi-circular base (168). Flanges (171, 173) each comprise a respective opening (175, 177). Clamp arm (44) is rotatably coupled to lower distal shaft element (170) via a pair of inwardly extending integral pins (41, 45). Pins (41, 45) extend inwardly from arms (156) of clamp arm (44) and are rotatably disposed within respective openings (175, 177) of lower distal shaft element (170). As shown in FIGS. 10A-10C, longitudinal translation of cable (174) causes longitudinal translation of lower distal shaft element (170) between a proximal position (FIG. 10A) and a distal position (FIG. 10C). Longitudinal translation of lower distal shaft element (170) causes rotation of clamp arm (44) between a closed position (FIG. 10A) and an open position (FIG. 10C).

[000113] Blade (160) of the present example is operable to vibrate at ultrasonic frequencies in order to effectively cut through and seal tissue, particularly when the tissue is being compressed between clamp pad (46) and blade (160). Blade (160) is positioned at the distal end of an acoustic drivetrain. This acoustic drivetrain includes transducer assembly (12) and an acoustic waveguide (180). Acoustic waveguide (180) comprises a flexible portion (166). Transducer assembly (12) includes a set of piezoelectric discs (not shown) located proximal to a horn (not shown) of waveguide (180). The piezoelectric discs are operable to convert electrical power into ultrasonic vibrations, which are then transmitted along waveguide (180), including flexible portion (166) of waveguide (180) to blade (160) in accordance with known configurations and techniques. By way of example only, this portion of the acoustic drivetrain may be configured in accordance with various teachings of various references that are cited herein.

[000114] As best seen in FIG. 3, flexible portion (166) of waveguide (180) includes a distal flange (136), a proximal flange (138), and a narrowed section (164) located between flanges (136, 138). In the present example, flanges (136, 138) are located at positions corresponding to nodes associated with resonant ultrasonic vibrations communicated through flexible portion (166) of waveguide (180). Narrowed section (164) is configured to allow flexible portion (166) of waveguide (180) to flex without significantly affecting

the ability of flexible portion (166) of waveguide (180) to transmit ultrasonic vibrations. By way of example only, narrowed section (164) may be configured in accordance with one or more teachings of U.S. Pub. No. 2014/0005701 and/or U.S. Pub. No. 2014/0114334, the disclosures of which are incorporated by reference herein. It should be understood that waveguide (180) may be configured to amplify mechanical vibrations transmitted through waveguide (180). Furthermore, waveguide (180) may include features operable to control the gain of the longitudinal vibrations along waveguide (180) and/or features to tune waveguide (180) to the resonant frequency of the system. Various suitable ways in which waveguide (180) may be mechanically and acoustically coupled with transducer assembly (12) will be apparent to those of ordinary skill in the art in view of the teachings herein.

[000115] In the present example, the distal end of blade (160) is located at a position corresponding to an anti-node associated with resonant ultrasonic vibrations communicated through flexible portion (166) of waveguide (180), in order to tune the acoustic assembly to a preferred resonant frequency f_o when the acoustic assembly is not loaded by tissue. When transducer assembly (12) is energized, the distal end of blade (160) is configured to move longitudinally in the range of, for example, approximately 10 to 500 microns peak-to-peak, and in some instances in the range of about 20 to about 200 microns at a predetermined vibratory frequency f_o of, for example, 55.5 kHz. When transducer assembly (12) of the present example is activated, these mechanical oscillations are transmitted through waveguide (180) to reach blade (160), thereby providing oscillation of blade (160) at the resonant ultrasonic frequency. Thus, when tissue is secured between blade (160) and clamp pad (46), the ultrasonic oscillation of blade (160) may simultaneously sever the tissue and denature the proteins in adjacent tissue cells, thereby providing a coagulative effect with relatively little thermal spread. In some versions, an electrical current may also be provided through blade (160) and clamp arm (44) to also cauterize the tissue. While some configurations for an acoustic transmission assembly and transducer assembly (12) have been described, still other suitable configurations for an acoustic transmission assembly and transducer assembly (12) will be apparent to one or ordinary skill in the art in view of the teachings herein. Similarly, other

suitable configurations for end effector (40) will be apparent to those of ordinary skill in the art in view of the teachings herein.

[000116] B. Exemplary Shaft Assembly and Articulation Section

[000117] Shaft assembly (30) of the present example extends distally from handle assembly (20). As shown in FIGS. 2-7, shaft assembly (30) includes distal outer sheath (33) and a proximal outer sheath (32) that enclose clamp arm (44) drive features and the above-described acoustic transmission features. Shaft assembly (30) further includes an articulation section (130), which is located at a distal portion of shaft assembly (30), with end effector (40) being located distal to articulation section (130). As shown in FIG. 1, a knob (31) is secured to a proximal portion of proximal outer sheath (32). Knob (31) is rotatable relative to body (22), such that shaft assembly (30) is rotatable about the longitudinal axis defined by outer sheath (32), relative to handle assembly (20). Such rotation may provide rotation of end effector (40), articulation section (130), and shaft assembly (30) unitarily. Of course, rotatable features may simply be omitted if desired.

[000118] Articulation section (130) is operable to selectively position end effector (40) at various lateral deflection angles relative to a longitudinal axis defined by outer sheath (32). Articulation section (130) may take a variety of forms. By way of example only, articulation section (130) may be configured in accordance with one or more teachings of U.S. Pub. No. 2012/0078247, the disclosure of which is incorporated by reference herein. As another merely illustrative example, articulation section (130) may be configured in accordance with one or more teachings of U.S. Pub. No. 2014/0005701 and/or U.S. Pub. No. 2014/0114334, the disclosures of which are incorporated by reference herein. Various other suitable forms that articulation section (130) may take will be apparent to those of ordinary skill in the art in view of the teachings herein.

[000119] As best seen in FIGS. 2-6B articulation section (130) of this example comprises a set of three retention collars (133) and a pair of ribbed body portions (132, 134), with a pair of articulation bands (140, 142) extending along respective channels (135, 137) defined between interior surfaces of retention collars (133) and exterior surfaces of ribbed body portions (132, 134). Ribbed body portions (132, 134) are longitudinally positioned

between flanges (136, 138) of flexible portion (166) of waveguide (180). In some versions, ribbed body portions (132, 134) snap together about flexible portion (166) of waveguide (180). Ribbed body portions (132, 134) are configured to flex with flexible portion (166) of waveguide (180) when articulation section (130) bends to achieve an articulated state.

[000120] FIG. 3 shows ribbed body portions (132, 134) in greater detail. In the present example, ribbed body portions (132, 134) are formed of a flexible plastic material, though it should be understood that any other suitable material may be used. Ribbed body portion (132) comprises a set of three ribs (150) that are configured to promote lateral flexing of ribbed body portion (132). Of course, any other suitable number of ribs (150) may be provided. Ribbed body portion (132) also defines a channel (135) that is configured to receive articulation band (140) while allowing articulation band (140) to slide relative to ribbed body portion (132). Similarly, ribbed body portion (134) comprises a set of three ribs (152) that are configured to promote lateral flexing of ribbed body portion (134). Of course, any other suitable number of ribs (152) may be provided. Ribbed body portion (134) also defines a channel (137) that is configured to receive articulation band (142) while allowing articulation band (142) to slide relative to ribbed body portion (137).

[000121] As best seen in FIG. 5, ribbed body portions (132, 134) are laterally interposed between articulation bands (140, 142) and flexible portion (166) of waveguide (180). Ribbed body portions (132, 134) mate with each other such that they together define an internal passage sized to accommodate flexible portion (166) of waveguide (180) without contacting waveguide (180). In addition, when ribbed body portions (132, 134) are coupled together, a pair of complementary distal notches (131A, 131B) formed in ribbed body portions (132, 134) align to receive a pair of inwardly projecting resilient tabs (38) of distal outer sheath (33). This engagement between tabs (38) and notches (131A, 131B) longitudinally secures ribbed body portions (132, 134) relative to distal outer sheath (33). Similarly, when ribbed body portions (132, 134) are coupled together, a pair of complementary proximal notches (139A, 139B) formed in ribbed body portions (132, 134) align to receive a pair of inwardly projecting resilient tabs (37) of proximal outer

sheath (32). This engagement between tabs (37) and notches (139A, 139B) longitudinally secures ribbed body portions (132, 134) relative to proximal outer sheath (32). Of course, any other suitable kinds of features may be used to couple ribbed body portions (132, 134) with proximal outer sheath (32) and/or distal outer sheath (33).

[000122] The distal ends of articulation bands (140, 142) are unitarily secured to upper distal shaft element (172). When articulation bands (140, 142) translate longitudinally in an opposing fashion, this will cause articulation section (130) to bend, thereby laterally deflecting end effector (40) away from the longitudinal axis of shaft assembly (30) from a straight configuration as shown in FIG. 6A to an articulated configuration as shown in FIG. 6B. In particular, end effector (40) will be articulated toward the articulation band (140, 142) that is being pulled proximally. During such articulation, the other articulation band (140, 142) may be pulled distally by upper distal shaft element (172). Alternatively, the other articulation band (140, 142) may be driven distally by an articulation control. Ribbed body portions (132, 134) and narrowed section (164) are all sufficiently flexible to accommodate the above-described articulation of end effector (40). Furthermore, flexible acoustic waveguide (166) is configured to effectively communicate ultrasonic vibrations from waveguide (180) to blade (160) even when articulation section (130) is in an articulated state as shown in FIG. 6B.

[000123] As best seen in FIG. 3, each flange (136, 138) of waveguide (180) includes a respective pair of opposing flats (192, 196). Flats (192, 196) are oriented along vertical planes that are parallel to a vertical plane extending through narrowed section (164) of flexible portion (166). Flats (192, 196) are configured to provide clearance for articulation bands (140, 142). In particular, flats (196) of proximal flange (138) accommodate articulation bands (140, 142) between proximal flange (138) and the inner diameter of proximal outer sheath (32): while flats (192) of distal flange (136) accommodate articulation bands (140, 142) between distal flange (136) and the inner diameter of distal outer sheath (33). Of course, flats (192, 196) could be substituted with a variety of features, including but not limited to slots, channels, etc., with any suitable kind of profile (e.g., square, flat, round, etc.). In the present example, flats (192, 196) are formed in a milling process, though it should be understood that any other suitable

process(es) may be used. Various suitable alternative configurations and methods of forming flats (192, 196) will be apparent to those of ordinary skill in the art in view of the teachings herein. It should also be understood that waveguide (180) may include flats formed in accordance with at least some of the teachings of U.S. Pub. No. 2013/0289592, entitled "Ultrasonic Device for Cutting and Coagulating," published October 31, 2013, the disclosure of which is incorporated by reference herein.

[000124] In the present example, outer rings (133) are located at longitudinal positions corresponding to ribs (150, 152), such that three rings (133) are provided for three ribs (150, 152). Articulation band (140) is laterally interposed within channel (135) between rings (133) and ribbed body portion (132); while articulation band (142) is laterally interposed within channel (137) between rings (133) and ribbed body portion (134). Rings (133) are configured to keep articulation bands (140, 142) in a parallel relationship, particularly when articulation section (130) is in a bent configuration (e.g., similar to the configuration shown in FIG. 6B). In other words, when articulation band (140) is on the inner diameter of a curved configuration presented by a bent articulation section (130), rings (133) may retain articulation band (140) such that articulation band (140) follows a curved path that complements the curved path followed by articulation band (142). It should be understood that channels (135, 137) are sized to accommodate respective articulation bands (140, 142) in such a way that articulation bands (140, 142) may still freely slide through articulation section (130), even with rings (133) being secured to ribbed body portions (150, 152). It should also be understood that rings (133) may be secured to ribbed body portions (132, 134) in various ways, including but not limited to interference fitting, adhesives, welding, etc.

[000125] When articulation bands (140, 142) are translated longitudinally in an opposing fashion, a moment is created and applied to a distal end of distal outer sheath (33) via upper distal shaft element (172). This causes articulation section (130) and narrowed section (164) of flexible portion (166) of waveguide (180) to articulate, without transferring axial forces in articulation bands (140, 142) to waveguide (180). It should be understood that one articulation band (140, 142) may be actively driven distally while the other articulation band (140, 142) is passively permitted to retract proximally. As

another merely illustrative example, one articulation band (140, 142) may be actively driven proximally while the other articulation band (140, 142) is passively permitted to advance distally. As yet another merely illustrative example, one articulation band (140, 142) may be actively driven distally while the other articulation band (140, 142) is actively driven proximally. Various suitable ways in which articulation bands (140, 142) may be driven will be apparent to those of ordinary skill in the art in view of the teachings herein.

[000126] As best seen in FIG. 9, an articulation control assembly (100) is secured to a proximal portion of outer sheath (32). Articulation control assembly (100) comprises a housing (110) and a rotatable knob (120). Housing (110) comprises a pair of perpendicularly intersecting cylindrical portions (112, 114). Knob (120) is rotatably disposed within a first hollow cylindrical portion (112) of housing (110) such that knob (120) is operable to rotate within cylindrical portion (112) of housing (110). Shaft assembly (30) is slidably and rotatably disposed within a second cylindrical portion (114). Shaft assembly (30) comprises a pair of translatable members (161, 162), both of which extend slidably and longitudinally through the proximal portion of outer sheath (32). Translatable members (161, 162) are longitudinally translatable within second cylindrical portion (114) between a distal position and a proximal position. Translatable members (161, 162) are mechanically coupled with respective articulation bands (140, 142) such that longitudinal translation of translatable member (161) causes longitudinal translation of articulation band (140), and such that longitudinal translation of translatable member (162) causes longitudinal translation of articulation band (142).

[000127] Knob (120) comprises a pair of pins (122, 124) extending downwardly from a bottom surface of knob (120). Pins (122, 124) extend into second cylindrical portion (114) of housing (110) and are rotatably and slidably disposed within a respective pair of channels (163, 164) formed in top surfaces of translatable members (161, 162). Channels (163, 164) are positioned on opposite sides of an axis of rotation of knob (120), such that rotation of knob (120) about that axis causes opposing longitudinal translation of translatable members (161, 162). For instance, rotation of knob (120) in a first direction causes distal longitudinal translation of translatable member (161) and articulation band

(140), and proximal longitudinal translation of translatable member (162) and articulation band (142); and rotation of knob (120) in a second direction causes proximal longitudinal translation of translatable member (161) and articulation band (140), and distal longitudinal translation of translatable member (162) and articulation band (142). Thus, it should be understood that rotation of rotation knob (120) causes articulation of articulation section (130).

[000128] Housing (110) of articulation control assembly (100) comprises a pair of set screws (111, 113) extending inwardly from an interior surface of first cylindrical portion (112). With knob (120) rotatably disposed within first cylindrical portion (112) of housing (110), set screws (111, 113) are slidably disposed within a pair of arcuate channels (121, 123) formed in knob (120). Thus, it should be understood that rotation of knob (120) will be limited by movement of set screws (111, 113) within channels (121, 123). Set screws (111, 113) also retain knob (120) in housing (110), preventing knob (120) from traveling vertically within first cylindrical portion (112) of housing (110).

[000129] An interior surface of first cylindrical portion (112) of housing (110) comprises a first angular array of teeth (116) and a second angular array of teeth (118) formed in an interior surface of first cylindrical portion (112). Rotation knob (120) comprises a pair of outwardly extending engagement members (126, 128) that are configured to engage teeth (116, 118) of first cylindrical portion (112) in a detent relationship to thereby selectively lock knob (120) in a particular rotational position. The engagement of engagement members (126, 128) with teeth (116, 118) may be overcome by a user applying sufficient rotational force to knob (120); but absent such force, the engagement will suffice to maintain the straight or articulated configuration of articulation section (130). It should therefore be understood that the ability to selectively lock knob (120) in a particular rotational position lock will enable an operator to selectively lock articulation section (130) in a particular deflected position relative to the longitudinal axis defined by outer sheath (32).

[000130] In some versions of instrument (10), articulation section (130) of shaft assembly (30) is operable to achieve articulation angles up to between approximately 15° and

approximately 30°, both relative to the longitudinal axis of shaft assembly (30) when shaft assembly (30) is in a straight (non-articulated) configuration. Alternatively, articulation section (130) may be operable to achieve any other suitable articulation angles.

[000131] In some versions of instrument (10), narrowed section (164) of waveguide (180) has a thickness between approximately 0.01 inches and approximately 0.02 inches. Alternatively, narrowed section (164) may have any other suitable thickness. Also in some versions, narrowed section (164) has a length of between approximately 0.4 inches and approximately 0.65 inches. Alternatively, narrowed section (164) may have any other suitable length. It should also be understood that the transition regions of waveguide (180) leading into and out of narrowed section (164) may be quarter rounded, tapered, or have any other suitable configuration.

[000132] In some versions of instrument (10), flanges (136, 138) each have a length between approximately 0.1 inches and approximately 0.2 inches. Alternatively, flanges (136, 138) may have any other suitable length. It should also be understood that the length of flange (136) may differ from the length of flange (138). Also in some versions, flanges (136, 138) each have a diameter between approximately 0.175 inches and approximately 0.2 inches. Alternatively, flanges (136, 138) may have any other suitable outer diameter. It should also be understood that the outer diameter of flange (136) may differ from the outer diameter of flange (138).

[000133] While the foregoing exemplary dimensions are provided in the context of instrument (10) as described above, it should be understood that the same dimensions may be used in any of the other examples described herein. It should also be understood that the foregoing exemplary dimensions are merely optional. Any other suitable dimensions may be used.

[000134] C. Exemplary Alternative End Effector and Shaft Assembly Configuration with Dual Role Bands and Flex Section As Ground

[000135] FIGS. 11A-12B show an exemplary alternative shaft assembly (200) and end

effector (240) that may be readily incorporated into instrument (10). Shaft assembly (200) of this example comprises a distal outer sheath (202), a proximal outer sheath (204), and an articulation section (210) configured to operate substantially similar to articulation section (130) discussed above except for the differences discussed below. In particular, articulation section (210) is operable to selectively position end effector (240) at various lateral deflection angles relative to a longitudinal axis defined by proximal outer sheath (204). End effector (240) includes an ultrasonic blade (242) and a pivoting clamp arm (244) having a clamp pad (245). End effector (240) is configured to operate substantially similar to end effector (40) discussed above except for the differences discussed below. In particular, clamp arm (244) of end effector (240) is operable to compress tissue against blade (242). When blade (242) is activated while clamp arm (244) compresses tissue against blade (242), end effector (240) simultaneously severs the tissue and denatures the proteins in adjacent tissue cells, thereby providing a coagulative effect.

[000136] Clamp arm (244) is operable to selectively pivot toward and away from blade (242) to selectively clamp tissue between clamp pad (245) and blade (242). Clamp arm (244) is pivotably secured to an upper distal end of distal outer sheath (202) via a pin (222). Distal outer sheath (202) is mechanically grounded to an instrument body (e.g., handle assembly (20), etc.) via articulation section (210) and proximal outer sheath (204). A pair of arms (247) extend transversely from clamp arm (244) and are pivotably secured to a collar (220) via a pin (224). Collar (220) is slidably disposed within distal outer sheath (202). Thus, it should be understood that longitudinal movement of collar (220) within distal outer sheath (202) causes pivoting of clamp arm (244) about pin (222) toward and away from blade (242). Collar (220) is longitudinally driven within distal outer sheath (202) as described in greater detail below.

[000137] Blade (242) is positioned at the distal end of an acoustic drivetrain, which passes through an inner bore of collar (220) without contacting collar (220). This acoustic drivetrain includes a transducer assembly (not shown) and an acoustic waveguide (246). Waveguide (246) comprises a flexible portion (248). Flexible portion (248) of waveguide (246) includes a distal flange (250), a proximal flange (not shown), and a

narrowed section (249) located between distal flange (250) and the proximal flange. In the present example, distal flange (250) and the proximal flange are located at positions corresponding to nodes associated with resonant ultrasonic vibrations communicated through flexible portion (248) of waveguide (246). Narrowed section (249) is configured to allow flexible portion (248) of waveguide (246) to flex without significantly affecting the ability of flexible portion (248) of waveguide (246) to transmit ultrasonic vibrations. As best seen in FIG. 11A-11B, distal flange (250) engages an interior surface of distal outer sheath (202). In some versions, a gap is defined between distal flange (250) and the interior surface of distal outer sheath (202). In some other versions, a dampening element such as an o-ring is interposed between distal flange (250) and the interior surface of distal outer sheath (202).

[000138] Shaft assembly (200) further comprises a pair of articulation bands (212, 214). Distal ends of articulation bands (212, 214) are secured to collar (220). Articulation bands (212, 214) are configured to operate substantially similar to articulation bands (140, 142) discussed above except for the differences discussed below. In particular, as shown in FIGS. 12A-12B, opposing longitudinal motion of articulation bands (212, 214) causes articulation of articulation section (210). When articulation bands (212, 214) are translated longitudinally in an opposing fashion, a moment is created and applied to a distal end of distal outer sheath (202) via pin (222), arms (247) of clamp arm (244), pin (224), and collar (220). This causes articulation section (210) and narrowed section (249) of flexible portion (248) of waveguide (246) to articulate, without transferring axial forces in articulation bands (212, 214) to waveguide (246).

[000139] As shown in FIGS. 11A-11B, when articulation bands (212, 214) are both translated in the same direction simultaneously, this simultaneous longitudinal movement of articulation bands (212, 214) causes concurrent longitudinal movement of collar (220) relative to distal outer sheath (202) and the other grounded components of shaft assembly (200). Thus, the simultaneous longitudinal motion of articulation bands (212, 214) in the same direction causes pivoting of clamp arm (244) toward and away from ultrasonic blade (242). It should therefore be understood that opposing longitudinal motion of articulation bands (212, 214) will cause articulation of articulation section (210); distal

movement of both articulation bands (212, 214) simultaneously will cause clamp arm (244) to pivot away from blade (242); and proximal movement of both articulation bands (212, 214) simultaneously will cause clamp arm (244) to pivot toward blade (242).

[000140] Articulation bands (212, 214) may be driven to translate in an opposing fashion by a modified version of articulation control assembly (100). Articulation bands (212, 214) may be driven to translate in the same direction simultaneously by a modified version of trigger (28). For instance, pivoting of trigger (28) toward and away from pistol grip (24) may cause the entire modified articulation control assembly (100) to translate, which may thereby cause both articulation bands (212, 214) to translate simultaneously in the same direction. Various suitable ways in which articulation control assembly (100) and trigger (28) may be modified and coupled together will be apparent to those of ordinary skill in the art in view of the teachings herein. Similarly, other suitable ways in which articulation bands (212, 214) may be driven (in an opposing fashion and/or simultaneously in the same direction) will be apparent to those of ordinary skill in the art in view of the teachings herein.

[000141] D. Exemplary Alternative End Effector and Shaft Assembly Configuration with Dual Role Bands and Waveguide As Ground

[000142] FIGS. 13A-14B show another exemplary alternative shaft assembly (300) and end effector (340) that may be readily incorporated into instrument (10). Shaft assembly (300) of this example comprises a distal outer sheath (302), a proximal outer sheath (304), and an articulation section (310) configured to operate substantially similar to articulation sections (130, 210) discussed above except for the differences discussed below. In particular, articulation section (310) is operable to selectively position end effector (340) at various lateral deflection angles relative to a longitudinal axis defined by proximal outer sheath (304). End effector (340) includes an ultrasonic blade (342) and a pivoting clamp arm (344) having a clamp pad (345). End effector (340) is configured to operate substantially similar to end effectors (40, 240) discussed above except for the differences discussed below. In particular, clamp arm (344) of end effector (340) is operable to compress tissue against blade (342). When blade (342) is activated while

clamp arm (344) compresses tissue against blade (342), end effector (340) simultaneously severs the tissue and denatures the proteins in adjacent tissue cells, thereby providing a coagulative effect.

[000143] Clamp arm (344) is operable to selectively pivot toward and away from blade (342) to selectively clamp tissue between clamp pad (345) and blade (342). Clamp arm (344) is pivotably secured to an upper distal end of a distal outer sheath (302) via a pin (322). A pair of arms (347) extend transversely from clamp arm (344) and are pivotably secured to a collar (320) via a pin (324). Collar (320) is slidably disposed within distal outer sheath (302). Thus, it should be understood that longitudinal movement of collar (320) within distal outer sheath (302) causes pivoting of clamp arm (344) about pin (322) toward and away from blade (342).

[000144] Blade (342) is positioned at the distal end of an acoustic drivetrain, which passes through an inner bore of collar (320) without contacting collar (320). This acoustic drivetrain includes a transducer assembly (not shown) and an acoustic waveguide (346). Waveguide (346) comprises a flexible portion (348). Flexible portion (348) of waveguide (346) includes a distal flange (350), a proximal flange (not shown), and a narrowed section (349) located between distal flange (350) and the proximal flange. In the present example, distal flange (350) and the proximal flange are located at positions corresponding to nodes associated with resonant ultrasonic vibrations communicated through flexible portion (348) of waveguide (346). Narrowed section (349) is configured to allow flexible portion (348) of waveguide (346) to flex without significantly affecting the ability of flexible portion (348) of waveguide (346) to transmit ultrasonic vibrations. As best seen in FIG. 13A and 13B, distal flange (350) is secured to distal outer sheath (302) via a pin (352). Distal outer sheath (302) is thereby mechanically grounded to an instrument body (e.g., handle assembly (20), etc.) via waveguide (346).

[000145] Shaft assembly (300) further comprises a pair of articulation bands (312, 314). Distal ends of articulation bands (312, 314) are secured to collar (320). Articulation bands (312, 314) are configured to operate substantially similar to articulation bands (140, 142, 212, 214) discussed above except for the differences discussed below. In

particular, as shown in FIGS. 14A-14B, opposing longitudinal motion of articulation bands (312, 314) causes articulation of articulation section (310). Distal ends of articulation bands (312, 314) are secured to collar (320). When articulation bands (312, 314) are translated longitudinally in an opposing fashion, a moment is created and applied to a distal end of distal outer sheath (302) via pin (322), arms (347) of clamp arm (344), pin (324), and collar (320). This causes articulation section (310) and narrowed section (349) of flexible portion (348) of waveguide (346) to articulate, without transferring axial forces in articulation bands (312, 314) to waveguide (346).

[000146] As shown in FIGS. 13A-13B, when articulation bands (312, 314) are both translated in the same direction simultaneously, this simultaneous longitudinal movement of articulation bands (312, 314) causes concurrent longitudinal movement of collar (320) relative to distal outer sheath (302) and the other grounded components of shaft assembly (300). Thus, the simultaneous longitudinal motion of articulation bands (312, 314) in the same direction causes pivoting of clamp arm (344) toward and away from ultrasonic blade (342). It should therefore be understood that opposing longitudinal motion of articulation bands (312, 314) will cause articulation of articulation section (310); distal movement of both articulation bands (312, 314) simultaneously will cause clamp arm (344) to pivot away from blade (342); and proximal movement of both articulation bands (312, 314) simultaneously will cause clamp arm (344) to pivot toward blade (342).

[000147] Articulation bands (312, 314) may be driven to translate in an opposing fashion by a modified version of articulation control assembly (100). Articulation bands (312, 314) may be driven to translate in the same direction simultaneously by a modified version of trigger (28). For instance, pivoting of trigger (28) toward and away from pistol grip (24) may cause the entire modified articulation control assembly (100) to translate, which may thereby cause both articulation bands (312, 314) to translate simultaneously in the same direction. Various suitable ways in which articulation control assembly (100) and trigger (28) may be modified and coupled together will be apparent to those of ordinary skill in the art in view of the teachings herein. Similarly, other suitable ways in which articulation bands (312, 314) may be driven (in an opposing fashion and/or simultaneously in the same direction) will be apparent to those of ordinary

skill in the art in view of the teachings herein.

[000148] E. Exemplary Alternative End Effector and Shaft Assembly Configuration with Clamp Arm Ball Joint

[000149] FIGS. 15A-16B show yet another exemplary alternative shaft assembly (400) and end effector (440) that may be readily incorporated into instrument (10). Shaft assembly (400) comprises a distal outer sheath (402), a proximal outer sheath (404), and an articulation section (410) configured to operate substantially similar to articulation sections (130, 210, 310) discussed above except for the differences discussed below. In particular, articulation section (410) is operable to selectively position end effector (440) at various lateral deflection angles relative to a longitudinal axis defined by proximal outer sheath (404). End effector (440) includes an ultrasonic blade (442) and a pivoting clamp arm (444) having a clamp pad (445). End effector (440) is configured to operate substantially similar to end effectors (40, 240, 340) discussed above except for the differences discussed below. In particular, clamp arm (444) of end effector (440) is operable to compress tissue against blade (442). When blade (442) is activated while clamp arm (444) compresses tissue against blade (442), end effector (440) simultaneously severs the tissue and denatures the proteins in adjacent tissue cells, thereby providing a coagulative effect.

[000150] Clamp arm (444) is operable to selectively pivot toward and away from blade (442) to selectively clamp tissue between clamp pad (445) and blade (442). A proximal end of clamp arm (444) comprises a socket (447) configured to engage a sphere-shaped collar (420). A distal end of distal outer sheath (402) comprises a socket (403) that is also configured to engage sphere-shaped collar (420), such that sphere-shaped collar (420) is captured between sockets (403, 447). In other words, clamp arm (444), sphere-shaped collar (420), and distal outer sheath (402) engage one another in a ball-and-socket-like relationship. The proximal end of clamp arm (444) is pivotably coupled with sphere-shaped collar (420) and distal outer sheath (402) via a pin (422). Thus, it should be understood that clamp arm (444) is operable to rotate about pin (422), along sphere-shaped collar (420), toward and away from blade (442). A bottom portion of clamp arm

(444) is pivotably coupled within a distal end of a rod (413). Rod (413) is slidably disposed within shaft assembly (400) such that rod (413) is freely translatable relative to articulation section (410). Thus, it should be understood that longitudinal movement of rod (413) causes pivoting of clamp arm (444) toward and away from blade (442) as shown in FIGS. 15A-15B. Rod (413) is coupled with a trigger (not shown) such that clamp arm (444) is pivotable toward and away from ultrasonic blade (442) in response to pivoting, sliding, or other actuation of the trigger.

[000151] Blade (442) is positioned at the distal end of an acoustic drivetrain, which passes through an inner bore of collar (420) without contacting collar (420). This acoustic drivetrain includes a transducer assembly (not shown) and an acoustic waveguide (446). Waveguide (446) comprises a flexible portion (448). Flexible portion (448) of waveguide (446) includes a distal flange (450), a proximal flange (not shown), and a narrowed section (449) located between distal flange (450) and the proximal flange. In the present example, distal flange (450) and the proximal flange are located at positions corresponding to nodes associated with resonant ultrasonic vibrations communicated through flexible portion (448) of waveguide (446). Narrowed section (449) is configured to allow flexible portion (448) of waveguide (446) to flex without significantly affecting the ability of flexible portion (448) of waveguide (446) to transmit ultrasonic vibrations. As best seen in FIG. 15A-15B, distal flange (450) engages an interior surface of distal outer sheath (402). In some versions, a gap is defined between distal flange (450) and the interior surface of distal outer sheath (402). In some other versions, a dampening element such as an o-ring is interposed between distal flange (450) and the interior surface of distal outer sheath (402).

[000152] Shaft assembly (400) further comprises a pair of articulation bands (412, 414). Distal ends of articulation bands (412, 414) are secured to distal outer sheath (402) and collar (420) via pin (422). Articulation bands (412, 414) are configured to operate substantially similar to articulation bands (140, 142, 212, 214, 312, 314) discussed above except for the differences discussed below. In particular, as shown in FIGS. 16A and 16B, opposing longitudinal motion of articulation bands (412, 414) is configured to cause articulation of articulation section (410). When articulation bands (412, 414) are

translated longitudinally in an opposing fashion, a moment is created and applied to a distal end of distal outer sheath (402) via pin (422). This causes articulation section (410) and narrowed section (449) of flexible portion (448) of waveguide (446) to articulate, without transferring axial forces in articulation bands (412, 414) to waveguide (446). Articulation bands (212, 214) may be driven to translate in an opposing fashion by a version of articulation control assembly (100) or by any other suitable drive mechanism.

[000153] F. Fourth Exemplary Alternative End Effector and Shaft Assembly Configuration

[000154] FIGS. 17A-18 show yet another exemplary alternative shaft assembly (500) and end effector (540) that may be readily incorporated into instrument (10). Shaft assembly (500) comprises a distal outer sheath (502), a proximal outer sheath (504), and an articulation section (510) configured to operate substantially similar to articulation sections (130, 210, 310, 410) discussed above except for the differences discussed below. In particular, articulation section (510) is operable to selectively position end effector (540) at various lateral deflection angles relative to a longitudinal axis defined by proximal outer sheath (504). End effector (540) includes an ultrasonic blade (542) and a pivoting clamp arm (544) having a clamp pad (545). End effector (540) is configured to operate substantially similar to end effectors (50, 240, 340, 440) discussed above except for the differences discussed below. In particular, clamp arm (544) of end effector (540) is operable to compress tissue against blade (542). When blade (542) is activated while clamp arm (544) compresses tissue against blade (542), end effector (540) simultaneously severs the tissue and denatures the proteins in adjacent tissue cells, thereby providing a coagulative effect.

[000155] Clamp arm (544) is operable to selectively pivot toward and away from blade (542) to selectively clamp tissue between clamp pad (545) and blade (542). Clamp arm (544) is pivotably secured to an upper distal end of a distal outer sheath (502) via a pin (522). A top portion of clamp arm (544) is pivotably coupled within a distal end of a rod (513). Rod (513) is slidably secured to a top of shaft assembly (500) such that rod (513) is freely translatable relative to articulation section (510). Thus, it should be understood

that longitudinal movement of rod (513) causes rotation of clamp arm (544) toward and away from blade (542). Rod (513) is coupled with a trigger (not shown) such that clamp arm (544) is pivotable toward and away from ultrasonic blade (542) in response to pivoting, sliding, or other actuation of the trigger.

[000156] Blade (542) is positioned at the distal end of an acoustic drivetrain. This acoustic drivetrain includes a transducer assembly (not shown) and an acoustic waveguide (546). Waveguide (546) comprises a flexible portion (548). Flexible portion (548) of waveguide (546) includes a distal flange (550), a proximal flange (552), and a narrowed section (549) located between flanges (550, 552). In the present example, flanges (550, 552) are located at positions corresponding to nodes associated with resonant ultrasonic vibrations communicated through flexible portion (548) of waveguide (546). Narrowed section (549) is configured to allow flexible portion (548) of waveguide (546) to flex without significantly affecting the ability of flexible portion (548) of waveguide (546) to transmit ultrasonic vibrations. It should be understood that rod (513) will also flex with flexible portion (548) when articulation section (510) is bent to an articulated state.

[000157] Shaft assembly (500) further comprises a pair of articulation cables (512). While only one articulation cable (512) is shown, it should be understood that another articulation cable (512) would be positioned on the other side of shaft assembly (500), 180° from the articulation cable (512) that is shown. The distal ends of articulation cables (512) are secured to distal flange (550) of waveguide (546). Articulation cables (512) are configured to operate substantially similar to articulation bands (140, 142, 212, 214, 312, 314, 412, 414) discussed above except for the differences discussed below. Opposing longitudinal motion of articulation cables (512) is configured to cause articulation of articulation section (510). Articulation cables (512) are secured to distal outer sheath (502) via a collar (520). When articulation cables (512) are translated longitudinally in an opposing fashion, a moment is created and applied to a distal end of distal outer sheath (502) via distal flange (550). This causes articulation section (510) and narrowed section (549) of flexible portion (548) of waveguide (546) to articulate, without transferring axial forces in articulation cables (512) to waveguide (546). Articulation bands (212, 214) may be driven to translate in an opposing fashion by a

version of articulation control assembly (100) or by any other suitable drive mechanism.

[000158] In some versions of shaft assembly (500), shaft assembly includes an additional outer sheath that is disposed about outer sheaths (502, 504) and articulation section (510). In some such versions, clamp arm (544) is pivotally coupled with this additional outer sheath instead of being pivotally coupled with distal outer sheath (502). Rod (513) may be further coupled with this additional outer sheath such that rod (513) may translate relative to the additional outer sheath to pivot clamp arm (544) toward and away from blade (542). This additional outer sheath may be rotated relative to outer sheaths (502, 504) and articulation section (510). For instance, the additional outer sheath may include a knob to provide such rotation (e.g., in addition to or in lieu of a knob that provides rotation of the entire shaft assembly (500) as a unit). The additional outer sheath may also be configured to flex at articulation section (510), such that the additional outer sheath does not significantly impede the ability of articulation section (510) to achieve an articulated state. By way of example only, the additional outer sheath may be formed of a thin metal tube (e.g., approximately 0.002 inches thick) with laser cut features (e.g., a pattern of slots) that enable flexing at articulation section (510).

[000159] In versions where an additional outer sheath is provided as described above, clamp arm (544) and rod (513) may rotate with the additional outer sheath relative to outer sheaths (502, 504) and articulation section (510). Thus, the additional outer sheath may be used to rotate clamp arm (544) about the longitudinal axis of shaft assembly (500) to provide clamp arm (544) at different orbital orientations about blade (542). In versions of blade (542) that have a non-circular cross-sectional profile, this ability to orient clamp arm (544) may enable the operator to select a specific orientation that is particularly suited for the task at hand. For instance, the operator may orient clamp arm (544) to face a relatively broad flat face of blade (542) in order to provide relatively greater hemostasis in tissue compressed between clamp arm (544) and blade (542); or orient clamp arm (544) to face a relatively narrow edge region of blade (542) in order to provide relatively faster cutting of tissue compressed between clamp arm (544) and blade (542). Other suitable configurations and relationships will be apparent to those of ordinary skill in the art in view of the teachings herein. Similarly, other suitable ways in

which an additional outer sheath may be formed and incorporated into shaft assembly (500) will be apparent to those of ordinary skill in the art in view of the teachings herein. While this additional outer sheath is described in the context of shaft assembly (500), it should be understood that such an additional outer sheath may also be incorporated into various other shaft assemblies described herein.

[000160] II. Exemplary Alternative Shaft Assembly Profiles

[000161] It may be desirable to change the profiles the components of shaft assembly (30). For instance, among other reasons, it may be desirable to change the profiles of the components of shaft assembly (30) to provide for more clearance within shaft assembly (30) while still enclosing the contents of shaft assembly (30) within an outer sheath. As will be discussed in more detail below, FIGS. 19-27 show various examples of how the profiles of the components of shaft assembly (30) may be changed. While various examples of how the profiles of the components of shaft assembly (30) may be changed will be described in greater detail below, other examples will be apparent to those of ordinary skill in the art according to the teachings herein. It should be understood that the examples of shaft assemblies and/or articulation sections described below may function substantially similar to shaft assembly (30) discussed above.

[000162] A. Exemplary Alternative Shaft Assembly Profile with Bands Defining Channels

[000163] FIG. 19 shows an exemplary alternative profile of yet another exemplary alternative shaft assembly (600) that may be used as a substitute for shaft assembly (30) in instrument (10). Shaft assembly (600) of this example comprises an outer sheath (602), a pair of articulation bands (604, 606), a waveguide (608), and a drive rod (610). Articulation bands (604, 606) are configured to operate substantially similar to articulation bands (140, 142), such that opposing longitudinal motion of articulation bands (604, 606) causes articulation of shaft assembly (600). Rod (610) is configured to operate substantially similar to cable (174) discussed above, such that longitudinal translation of rod (610) causes actuation of a clamp arm (not shown).

[000164] Outer sheath (602) has a circular cross-sectional profile. Each articulation band (604, 606) comprises a large semi-circular portion (612, 614) and a small semi-circular portion (616, 618). Small semi-circular portions (616, 618) extend inwardly from large semi-circular portions (612, 614). Articulation bands (604, 606) are arranged within outer sheath (602) such that small semi-circular portions (616, 618) are adjacent to one another, and form a channel (620) therebetween. Rod (610) is slidably disposed within channel (620) and is configured to longitudinally translate within channel (620) to thereby actuate the clamp arm. In the cross-sectional region shown in FIG. 19, waveguide (608) has a rectangular profile and passes within outer sheath (602) between articulation bands (604, 606). It should be understood that waveguide (608) may have any other suitable cross-sectional profile that fits within the space defined between articulation bands (604, 606). Moreover, the cross-sectional profile of waveguide (608) may vary along the length of waveguide (608).

[000165] B. Exemplary Alternative Shaft Assembly Profile Drive Features Between Inner Tube and Outer Tube

[000166] FIG. 20 shows another exemplary alternative profile of yet another exemplary alternative shaft assembly (650) that may be used as a substitute for shaft assembly (30) in instrument (10). Shaft assembly (650) of this example comprises an outer sheath (652), an inner tube (654), a pair of articulation bands (656, 658), a waveguide (660), and a drive rod (662). Articulation bands (656, 658) are configured to operate substantially similar to articulation bands (140, 142), such that opposing longitudinal motion of articulation bands (656, 658) causes articulation of shaft assembly (650). Rod (662) is configured to operate substantially similar to cable (174) discussed above, such longitudinal translation of rod (662) actuates a clamp arm (not shown).

[000167] Outer sheath (652) has a circular cross-sectional profile. Inner tube (654) is slidably disposed within outer sheath (652) such that a space (664) is defined between an interior surface of outer sheath (652) and an exterior surface of inner tube (654). Articulation bands (656, 658) are slidably disposed within space (664) between inner tube (654) and outer tube (652). A semi-circular channel (666) is formed in the exterior

surface of inner tube (654). Rod (662) is slidably disposed within channel (666) and is configured to longitudinally translate within channel (666) to thereby actuate the clamp arm. In the cross-sectional region shown in FIG. 20, waveguide (660) has a rectangular profile and passes within inner tube (654). It should be understood that waveguide (660) may have any other suitable cross-sectional profile that fits within the space defined within inner tube (654). Moreover, the cross-sectional profile of waveguide (660) may vary along the length of waveguide (660).

[000168] C. Exemplary Alternative Shaft Assembly Profile with Waveguide Defining Channels and Dual Rods

[000169] FIG. 21 shows yet another exemplary alternative profile of yet another exemplary alternative shaft assembly (700) that may be used as a substitute for shaft assembly (30) in instrument (10). Shaft assembly (700) of this example comprises an outer sheath (702), a pair of articulation bands (704, 706), a waveguide (708), and a pair of rods (710, 712). Articulation bands (704, 706) are configured to operate substantially similar to articulation bands (140, 142) discussed above, such that opposing longitudinal motion of articulation bands (704, 706) causes articulation of shaft assembly (700). Rods (710, 712) are configured to operate substantially similar to cable (174), such that longitudinal translation of rods (710, 712) provides actuation of a clamp arm (not shown). For instance, rod (710) may translate proximally while the other rod (712) translates distally to pivot a clamp arm away from an ultrasonic blade; and rod (710) may translate distally while the other rod (712) translates proximally to pivot the clamp arm toward the ultrasonic blade. Various suitable ways in which rods (710, 712) may be driven in such an opposing fashion will be apparent to those of ordinary skill in the art in view of the teachings herein. In some other versions, one of the rods (710, 712) is substituted with one or more wires that is/are configured to provide RF electrosurgical capabilities at an end effector that is at the distal end of shaft assembly (700).

[000170] Outer sheath (702) has a circular cross-sectional profile. Waveguide (708) has a generally circular cross-sectional profile with a pair of flats (714, 716) and a pair of semi-circular channels (718, 720) defined within an exterior surface of waveguide (708). Rods

(710, 712) are slidably disposed within respective channels (718, 720) and are configured to longitudinally translate within channels (718, 720) to thereby actuate the clamp arm. Waveguide (708) is disposed within outer sheath (702) such that a space (722) is defined between an interior surface of outer sheath (702) and an exterior surface of waveguide (708). Articulation bands (704, 706) are slidably disposed within space (722) between outer sheath (702) and waveguide (708) adjacent to flats (714, 716) and are configured to longitudinally translate within space (722) to thereby cause articulation of shaft assembly (700).

[000171] D. Exemplary Alternative Shaft Assembly Profile with Waveguide Defining Channels and Single Upper Rod

[000172] FIG. 22 shows yet another exemplary alternative profile of yet another exemplary alternative shaft assembly (750) that may be used as a substitute for shaft assembly (30) in instrument (10). Shaft assembly (750) of this example comprises an outer sheath (752), a pair of articulation bands (754, 756), a waveguide (758), and a rod (760). Articulation bands (754, 756) are configured to operate substantially similar to articulation bands (140, 142) discussed above, such that opposing longitudinal motion of articulation bands (754, 756) causes articulation of shaft assembly (750). Rod (760) is configured to operate substantially similar to cable (174), such that longitudinal translation of rod (760) provides actuation of a clamp arm (not shown).

[000173] Outer sheath (752) has a circular cross-sectional profile. Waveguide (758) has a generally circular cross-sectional profile with a pair of flats (764, 766) and a pair of semi-circular channels (768, 770) defined within an exterior surface of waveguide (758). Waveguide (758) is disposed within outer sheath (752) such that a space (772) is defined between an interior surface of outer sheath (752) and an exterior surface of waveguide (758). Articulation bands (754, 756) are slidably disposed within space (772) between outer sheath (752) and waveguide (758) adjacent to flats (764, 766) and are configured to longitudinally translate to thereby cause articulation of shaft assembly (750). Rod (760) is slidably disposed within channel (768) and is configured to longitudinally translate within channel (768) to thereby actuate the clamp arm. In this example, no component is

disposed in channel (770). Thus, channel (770) may simply be omitted if desired. Alternative, one or more wires and/or other components may be positioned in channel (770).

[000174] E. Exemplary Alternative Shaft Assembly Profile with Waveguide Defining Channels and Single Lower Rod

[000175] FIG. 23 shows yet another exemplary alternative profile of yet another exemplary alternative shaft assembly (800) that may be used as a substitute for shaft assembly (30) in instrument (10). Shaft assembly (800) of this example comprises an outer sheath (802), a pair of articulation bands (804, 806), a waveguide (808), and a rod (810). Articulation bands (804, 806) are configured to operate substantially similar to articulation bands (140, 142) discussed above, such that opposing longitudinal motion of articulation bands (804, 806) causes articulation of shaft assembly (800). Rod (810) is configured to operate substantially similar to cable (174) discussed above, such that longitudinal translation of rod (810) provides actuation of a clamp arm (not shown).

[000176] Outer sheath (802) has a circular cross-sectional profile. Waveguide (808) has a generally circular cross-sectional profile with a pair of flats (814, 816) and a pair of semi-circular channels (818, 820) defined within an exterior surface of waveguide (808). Waveguide (808) is disposed within outer sheath (802) such that a space (822) is defined between an interior surface of outer sheath (802) and an exterior surface of waveguide (808). Articulation bands (804, 806) are slidably disposed within space (822) between outer sheath (802) and waveguide (808) adjacent to flats (814, 816) and are configured to longitudinally translate to thereby cause articulation of shaft assembly (800). Rod (810) is slidably disposed within channel (820) and is configured to longitudinally translate within channel (820) to thereby actuate the clamp arm. In this example, no component is disposed in channel (818). Thus, channel (818) may simply be omitted if desired. Alternative, one or more wires and/or other components may be positioned in channel (818).

[000177] F. Exemplary Alternative Shaft Assembly Profile with Outer Sheath Defining Channels for Upper and Lower Rods

[000178] FIG. 24 shows yet another exemplary alternative profile of yet another exemplary alternative shaft assembly (850) that may be used as a substitute for shaft assembly (30) in instrument (10). Shaft assembly (850) of this example comprises an outer sheath (852), a pair of articulation bands (854, 856), a waveguide (858), and a pair of rods (860, 862). Articulation bands (854, 856) are configured to operate substantially similar to articulation bands (140, 142) discussed above, such that opposing longitudinal motion of articulation bands (854, 856) causes articulation of shaft assembly (850). Rods (860, 862) are configured to operate substantially similar to rods (710, 712) discussed above, such that longitudinal translation of rods (860, 862) is configured to cause rotation of a clamp arm (not shown). For instance, rod (860) may translate proximally while the other rod (862) translates distally to pivot a clamp arm away from an ultrasonic blade; and rod (860) may translate distally while the other rod (862) translates proximally to pivot the clamp arm toward the ultrasonic blade. Various suitable ways in which rods (860, 862) may be driven in such an opposing fashion will be apparent to those of ordinary skill in the art in view of the teachings herein. In some other versions, one of the rods (860, 862) is substituted with one or more wires that is/are configured to provide RF electrosurgical capabilities at an end effector that is at the distal end of shaft assembly (800).

[000179] Outer sheath (852) has a generally circular cross-sectional profile and includes a pair of inwardly extending projections (864, 866). Projections (864, 866) each define a respective through bore (868, 870). In some versions, outer sheath (852) is formed in an extrusion process (e.g., from plastic and/or metal, etc.). Of course, any suitable process may be used to form outer sheath (852). Rods (860, 862) are slidably disposed within through bores (868, 870) and are configured to longitudinally translate within through bores (868, 870) to thereby rotate the clamp arm. Articulation bands (854, 856) each have a semi-circular cross-sectional profile. Articulation bands (854, 856) are slidably disposed within outer sheath (852) between projections (864, 866) and are configured to longitudinally translate to thereby cause articulation of shaft assembly (850).

[000180] In the cross-sectional region shown in FIG. 24, waveguide (858) has a rectangular profile and passes within the space defined between articulation bands (854, 856). It should be understood that waveguide (858) may have any other suitable cross-sectional

profile that fits within the space defined between articulation bands (854, 856). Moreover, the cross-sectional profile of waveguide (858) may vary along the length of waveguide (858).

[000181] G. Exemplary Alternative Shaft Assembly Profile with Outer Sheath Defining Channels for Dual Lower Rods

[000182] FIG. 25 shows yet another exemplary alternative profile of yet another exemplary alternative shaft assembly (900) that may be used as a substitute for shaft assembly (30) in instrument (10). Shaft assembly (900) of this example comprises an outer sheath (902), a pair of articulation bands (904, 906), a waveguide (908), and a pair of rods (910, 912). Articulation bands (904, 906) are configured to operate substantially similar to articulation bands (140, 142) discussed above, such that opposing longitudinal motion of articulation bands (904, 906) causes articulation of shaft assembly (900). Rods (910, 912) are configured to operate substantially similar to cable (174) discussed above, such that longitudinal translation of rods (910, 912) actuates a clamp arm (not shown).

[000183] Outer sheath (902) has a circular cross-sectional profile. A partitioning member (914) extends between an interior surface of outer sheath (902) along a chord line, and divides the interior of outer sheath (902) into a first lumen (916) and a second lumen (918). Articulation bands (904, 906) each have a semi-circular profile. Articulation bands (904, 906) are slidably disposed within first lumen (916) of outer sheath (902) adjacent to one another and are configured to longitudinally translate to thereby cause articulation of shaft assembly (900). Rods (910, 912) are slidably disposed within second lumen (918) of outer sheath (902) and are configured to longitudinally translate within second lumen (918) to thereby actuate the clamp arm. In some versions, both rods (910, 912) translate longitudinally in the same direction simultaneously to actuate the clamp arm. In some other versions, rods (910, 912) translate longitudinally in an opposing fashion to actuate the clamp arm. In still other versions, one of the rods (910, 912) is substituted with one or more wires that is/are configured to provide RF electrosurgical capabilities at an end effector that is at the distal end of shaft assembly (900).

[000184] In the cross-sectional region shown in FIG. 25, waveguide (908) has a rectangular

profile and passes within the space defined between articulation bands (904, 906) and partitioning member (914). It should be understood that waveguide (908) may have any other suitable cross-sectional profile that fits within the space defined between articulation bands (904, 906) and partitioning member (914). Moreover, the cross-sectional profile of waveguide (908) may vary along the length of waveguide (908).

[000185] H. Exemplary Alternative Shaft Assembly Profile with Partitioning Member Defining Channel for Single Lower Ribbon

[000186] FIG. 26 shows yet another exemplary alternative profile of yet another exemplary alternative shaft assembly (950) that may be used as a substitute for shaft assembly (30) in instrument (10). Shaft assembly (950) of this example comprises an outer sheath (952), a pair of articulation bands (954, 956), a waveguide (958), and a ribbon (960). Articulation bands (954, 956) are configured to operate substantially similar to articulation bands (140, 142) discussed above, such that opposing longitudinal motion of articulation bands (954, 956) causes articulation of shaft assembly (950). Ribbon (960) is configured to operate substantially similar to cable (174), such that longitudinal translation of ribbon (960) actuates a clamp arm (not shown).

[000187] Outer sheath (952) has a circular cross-sectional profile. A partitioning member (964) extends between an interior surface of outer sheath (952) along a chord line, and divides the interior of outer sheath (952) into a first lumen (966) and a second lumen (968). Articulation bands (954, 956) each have a semi-circular profile. Articulation bands (954, 956) are slidably disposed within first lumen (966) of outer sheath (952) adjacent to one another and are configured to longitudinally translate to thereby cause articulation of shaft assembly (950). Ribbon (960) is slidably disposed within second lumen (968) of outer sheath (952) and is configured to longitudinally translate within second lumen (968) to thereby actuate the clamp arm.

[000188] In the cross-sectional region shown in FIG. 26, waveguide (958) has a rectangular profile and passes within the space defined between articulation bands (954, 956) and partitioning member (964). It should be understood that waveguide (908) may have any other suitable cross-sectional profile that fits within the space defined between

articulation bands (954, 956) and partitioning member (964). Moreover, the cross-sectional profile of waveguide (958) may vary along the length of waveguide (958).

[000189] I. Exemplary Alternative Shaft Assembly Profile with Outer Sheath Defining Channel for Single Lower Rod

[000190] FIG. 27 shows yet another exemplary alternative profile of yet another exemplary alternative shaft assembly (1000) that may be used as a substitute for shaft assembly (30) in instrument (10). Shaft assembly (1000) of this example comprises an outer sheath (1002), a pair of articulation bands (1004, 1006), a waveguide (1008), and a ribbon (1010). Articulation bands (1004, 1006) are configured to operate substantially similar to articulation bands (140, 142) discussed above, such that opposing longitudinal motion of articulation bands (1004, 1006) causes articulation of shaft assembly (1000). Ribbon (1010) is configured to operate substantially similar to cable (174) discussed above, such that longitudinal translation of ribbon (1010) actuates a clamp arm (not shown).

[000191] Outer sheath (1002) defines a first lumen (1012) and a second lumen (1014). In some versions, outer sheath (1002) is formed in an extrusion process (e.g., from plastic and/or metal, etc.). Of course, any suitable process may be used to form outer sheath (852). Articulation bands (1004, 1006) each have a semi-circular profile. Articulation bands (1004, 1006) are slidably disposed within first lumen (1012) of outer sheath (1002) adjacent to one another and are configured to longitudinally translate to thereby cause articulation of shaft assembly (1000). Ribbon (1010) is slidably disposed within second lumen (1014) of outer sheath (1002) and is configured to longitudinally translate within second lumen (1018) to thereby actuate the clamp arm.

[000192] In the cross-sectional region shown in FIG. 27, waveguide (1008) has a rectangular profile and passes within the space defined between articulation bands (1004, 1006). It should be understood that waveguide (1008) may have any other suitable cross-sectional profile that fits within the space defined between articulation bands (1004, 1006). Moreover, the cross-sectional profile of waveguide (1008) may vary along the length of waveguide (1008).

[000193] III. Exemplary Alternative Actuation of Clamp Arm

[000194] It may be desirable to alter the operation of clamp arm (44) and/or articulation section (130). As will be discussed in more detail below, FIGS. 28-33B show various examples of how the operation of clamp arm (44) may be altered. While various examples of how the operation of clamp arm (44) may be altered will be described in greater detail below, other examples will be apparent to those of ordinary skill in the art according to the teachings herein. It should be understood that the examples of clamp arms described below may function substantially similar to clamp arm (44) discussed above. In particular, the examples of clamp arms described below are operable to compress tissue against an ultrasonic blade to thereby simultaneously sever the tissue and denature the proteins in adjacent tissue cells, thereby providing a coagulative effect.

[000195] A. Exemplary Alternative Clamp Arm Drive Assembly with Rod and Arcuate Arms

[000196] FIGS. 28 and 29 show an exemplary rod (1050) and clamp arm (1060) that may be readily incorporated into instrument (10). Clamp arm (1060) is configured to operate substantially similar to clamp arm (44) discussed above, such that clamp arm (1060) is operable to selectively pivot toward and away from a blade (not shown) to selectively clamp tissue between clamp arm (1060) and the blade. Rod (1050) is configured to operate substantially similar to cable (174), such that longitudinal translation of rod (1050) causes actuation of clamp arm (1060) toward and away from the blade.

[000197] In the present example, a coupler (1052) is disposed at a distal end of rod (1050). Coupler (1052) comprises a pair of circular recesses (1054, 1056) formed in opposite sides of coupler (1052). A pair of arcuate arms (1062, 1064) extend transversely from clamp arm (1060). A circular projection (1066, 1068) extends inwardly from an interior surface of each arcuate arm (1062, 1064). Circular projections (1066, 1068) are rotatably disposed with respective circular recesses (1054, 1056) of coupler (1052). As discussed above with reference to instrument (10), clamp arm (1060) would be rotatably secured to a distal end of a longitudinally grounded shaft assembly (not shown), such that longitudinal movement of rod (1050) and coupler (1052) would pivotally actuate clamp

arm (1060) toward and away from the blade.

[000198] B. Exemplary Alternative Clamp Arm Drive Assembly with Bent Rods

[000199] FIGS. 30 and 31 show additional examples of configurations that may be used to couple a pair of rods with a clamp arm to actuate the clamp arm. In the example shown in FIG. 30, a pair of rods (1100, 1102) each comprise a dog-leg feature (1104, 1106) at a distal end of rods (1100, 1102). A clamp arm (1110) comprises a pair of openings (1112, 1114). Dog-leg features (1104, 1106) of rods (1100, 1102) are pivotably disposed in openings (1112, 1114) of clamp arm (1110). As discussed above with reference to instrument (10), clamp arm (1110) would be rotatably secured to a distal end of a longitudinally grounded shaft assembly (not shown), such that longitudinal movement of rods (1100, 1102) would pivotally actuate clamp arm (1110) toward and away from a blade (not shown). In the present example, rods (1100, 1102) are directly coupled with clamp arm (1110). In some other versions, rods (1100, 1102) are coupled with clamp arm (1110) via some intermediary component. For instance, rods (1100, 1102) may instead be directly coupled with a collar or inner tube section, which may in turn be pivotally coupled with clamp arm (1110). Other suitable relationships will be apparent to those of ordinary skill in the art in view of the teachings herein.

[000200] In the example shown in FIG. 31, a pair of rods (1120, 1122) each comprise an outwardly projecting tab (1124, 1126) at a distal end of rods (1120, 1122). A clamp arm (1130) comprises a pair of openings (1132, 1134). Outwardly projecting tabs (1124, 1126) of rods (1120, 1122) are pivotably disposed in openings (1132, 1134) of clamp arm (1130). As discussed above with reference to instrument (10), clamp arm (1130) would be rotatably secured to a distal end of a longitudinally grounded shaft assembly (not shown), such that longitudinal movement of rods (1120, 1122) would pivotally actuate clamp arm (1130) toward and away from a blade (not shown). In the present example, rods (1120, 1122) are directly coupled with clamp arm (1130). In some other versions, rods (1120, 1122) are coupled with clamp arm (1130) via some intermediary component. For instance, rods (1120, 1122) may instead be directly coupled with a collar or inner

tube section, which may in turn be pivotally coupled with clamp arm (1130). Other suitable relationships will be apparent to those of ordinary skill in the art in view of the teachings herein.

[000201] C. Exemplary Alternative Clamp Arm with Oblique Coupling Projection

[000202] FIGS. 32-33B show yet another exemplary alternative clamp arm (1150) that may be readily incorporated into instrument (10). Clamp arm (1150) of this example includes a clamp pad (1152) that is secured to the underside of clamp arm (1150). As shown in FIGS. 33A-33B, clamp arm (1150) is pivotably secured to a distal end of an exemplary alternative shaft assembly (1160). A tubular projection (1154) extends obliquely from clamp arm (1150) and is pivotably secured to a rod (1162). Rod (1162) is operable to translate longitudinally to thereby selectively pivot clamp arm (1150) toward and away from a blade (1164). As shown in FIG. 33A, tubular projection (1154) extends from clamp arm (1150) at an oblique angle relative to the longitudinal axis of shaft assembly (1160) when clamp arm (1150) is in a closed position. As shown in FIG. 33B, tubular projection (1154) extends from clamp arm (1150) perpendicularly to the longitudinal axis of shaft assembly (1160) when clamp arm (1150) is in an open position. It should be appreciated that, with tubular projection (1154) extending from clamp arm (1150) at an oblique angle relative to shaft assembly (1160), tubular projection (1154) will not contact blade (1164) when clamp arm (1150) is opened to a substantially wide open position.

[000203] D. Exemplary Alternative Articulation Section Drivers with Racks and Idler

[000204] FIGS. 34A-37 show yet another exemplary alternative shaft assembly (1200) and end effector (1210) that may be readily incorporated into instrument (10). Shaft assembly (1200) comprises a pair of articulation drive bands (1202, 1204) and a pair of jaw closure bands (1206, 1208). A distal end of each a articulation drive band (1202, 1204) is secured to a distal end of shaft assembly (1200) via a distal flange (1203) of a flexible waveguide (1230). When articulation drive bands (1202, 1204) are translated longitudinally in an opposing fashion, a moment is created and applied to the distal end

of shaft assembly (1200) via distal flange (1203). Thus, opposing longitudinal motion of articulation drive bands (1202, 1204) causes articulation of shaft assembly (1200). Articulation drive bands (1202, 1204) may be driven using a version of articulation control assembly (100) described above or any other suitable mechanism.

[000205] Jaw closure bands (1206, 1208) pass slidably through flange (1203). A distal end of each jaw closure band (1206, 1208) is pivotally secured to a clamp arm (1212). It should be understood that FIGS. 34A-34B only show transverse coupling arms (1213) of clamp arm (1212). As discussed above with reference to instrument (10), clamp arm (1212) would be rotatably secured to a distal end of a longitudinally grounded shaft assembly (1200), such that simultaneous longitudinal translation of jaw closure bands (1206, 1208) pivotally actuates clamp arm (1212) toward and away from an ultrasonic blade (1214).

[000206] As shown in FIG. 36, jaw closure bands (1206, 1208) may be pivotably secured to a bottom pivot opening (1218) in each arm (1213) of clamp arm (1212) in those versions of end effector (1210) where a top portion of clamp arm (1212) is pivotably secured to shaft assembly (1200) via a top pivot opening (1216) in each arm (1213), such that simultaneous longitudinal translation of jaw closure bands (1206, 1208) causes pivoting of clamp arm (1212) toward and away from an ultrasonic blade (1214). As shown in FIG. 37, jaw closure bands (1206, 1208) may be pivotably secured to top pivot opening (1216) in each arm (1213) of clamp arm (1212) in those versions of end effector (1210) where a bottom portion of clamp arm (1212) is pivotably secured to shaft assembly (1200) via bottom pivot opening (1218) in each arm (1213), such that simultaneous longitudinal translation of jaw closure bands (1206, 1208) causes pivoting of clamp arm (1212) toward and away from an ultrasonic blade (1214).

[000207] Referring back to FIGS. 34A-34B, the proximal region of each jaw closure band (1206, 1208) includes a respective, inwardly directed rack (1207, 1209). Shaft assembly (1200) of the present example further comprises a gear (1220) positioned between racks (1207, 1209) of articulation jaw closure bands (1206, 1208). Gear (1220) comprises a plurality of teeth (1222) that mesh with complementary teeth of racks (1207, 1209). Gear

(1220) is configured to rotate freely about a central axle (1221), such that gear (1220) serves as an idler. Thus, as shaft assembly (1200) is articulated by opposing longitudinal translation of articulation bands (1202, 1204), gear (1220) engages second pair of articulation bands (1206, 1208) and provides for guided, opposing longitudinal translation of jaw closure bands (1206, 1208) as shown in FIG. 34B. In other words, gear (1220) allows jaw closure bands (1206, 1208) to move in relation to each other to accommodate articulation of shaft assembly (1200).

[000208] Also in the present example, gear (1220) is operable to drive jaw closure bands (1206, 1208) longitudinally in the same direction in order to actuate clamp arm (1212). In particular, axle (1221) is configured to slide longitudinally relative to shaft assembly (1200), thereby providing longitudinal movement of gear (1220) relative to shaft assembly (1200). Due to engagement of teeth (1222) with racks, (1207, 1209), this will provide corresponding and simultaneous longitudinal movement of both jaw closure bands (1206, 1208) relative to shaft assembly (1200). Various suitable features that may be used to drive axle (1221) longitudinally will be apparent to those of ordinary skill in the art in view of the teachings herein.

[000209] FIG. 35 shows a cross-sectional view of shaft assembly (1200). At this cross-sectional region, waveguide (1230) has an I-shaped cross-sectional profile with a pair of rectangular channels (1232, 1234) defined on opposite sides of waveguide (1230). Articulation bands (1202, 1204) are slidably disposed within channel (1232) between waveguide (1230) and an interior surface of an outer sheath (1211). Articulation bands (1206, 1208) are slidably disposed within channel (1234) between waveguide (1230) and an interior surface of an outer sheath (1211). Of course, any other suitable configurations may be used.

[000210] E. Exemplary Shaft Assembly with Clamp Arm Actuation via Flexible Outer Sheath

[000211] FIGS. 38-39 show yet another exemplary alternative shaft assembly (1250) and end effector (1270) that may be readily incorporated into instrument (10). Shaft assembly (1250) comprises an outer sheath (1260), a pair of ribbed body portions (1252,

1254), a pair of articulation bands (1256, 1258), and a waveguide (1280). End effector (1270) includes an ultrasonic blade (1282) and a pivoting clamp arm (1272) having a clamp pad (1274). End effector (1270) is configured to operate substantially similar to end effector (40), such clamp arm (1272) of end effector (1270) is operable to compress tissue against blade (1282). When blade (1282) is activated while clamp arm (1272) compresses tissue against blade (1282), end effector (1270) simultaneously severs the tissue and denatures the proteins in adjacent tissue cells, thereby providing a coagulative effect.

[000212] Clamp arm (1272) is operable to selectively pivot toward and away from blade (1282) to selectively clamp tissue between clamp arm (1272) and blade (1282). A pair of arms (1273) extend transversely from clamp arm (1272). Arms (1273) are pivotably secured to a distally projecting tongue (1277) of a collar (1276). Collar (1276) is secured to a distal flange (1286) of waveguide (1280). Waveguide (1280) provides a longitudinal mechanical ground for collar (1276), which in turn provides a longitudinal mechanical ground to clamp arm (1272). Clamp arm (1272) is also pivotably secured with a distally projecting tongue (1261) of outer sheath (1260). Outer sheath (1260) is operable to translate longitudinally relative to waveguide (1280) and the other components of shaft assembly (1250) that are longitudinally mechanically grounded. It should therefore be understood that outer sheath (1260) is operable to actuate clamp arm (1272) toward and away from blade (1282). A trigger such as trigger (28) or any other suitable feature may be operable to translate outer sheath (1260) longitudinally, to thereby actuate clamp arm (1272) toward and away from blade (1282).

[000213] Blade (1282) is positioned at the distal end of an acoustic drivetrain. This acoustic drivetrain includes a transducer assembly (not shown) and waveguide (1280). Waveguide (1280) comprises a flexible portion (1284). Flexible portion (1284) of waveguide (1280) includes a distal flange (1286), a proximal flange (1288), and a narrowed section (1285) located between distal flanges (1286, 1288). In the present example, flanges (1286, 1288) are located at positions corresponding to nodes associated with resonant ultrasonic vibrations communicated through flexible portion (1284) of waveguide (1280). Narrowed section (1285) is configured to allow flexible portion

(1284) of waveguide (1280) to flex without significantly affecting the ability of flexible portion (1284) of waveguide (1280) to transmit ultrasonic vibrations. As best seen in

[000214] Outer sheath (1260) further comprises an articulation section (1262) having a series of interlocking rings (1264). Rings (1264) are configured to engage one another in a manner such that articulation section (1262) is operable to selectively flex at various lateral deflection angles relative to a longitudinal axis defined by shaft assembly (1250). Rings (1264) also allow outer sheath (1260) to translate along a bent region of shaft assembly (1250) when shaft assembly (1250) is in an articulated state.

[000215] Ribbed body portions (1252, 1254) are configured to selectively flex at various lateral deflection angles relative to the longitudinal axis defined by shaft assembly (1250) and to further provide for guidance of articulation bands (1256, 1258). In particular, ribbed body portions (1252, 1254) prevent articulation bands (1256) from contacting the region of waveguide (1280) between flanges (1286, 1288).

[000216] Articulation bands (1256, 1258) are configured to operate substantially similar to articulation bands (140, 142), such opposing longitudinal motion of articulation bands (1256, 1258) causes articulation of shaft assembly (1250). Articulation bands (1256, 1258) each comprise a flexible portion (1257, 1259) that is configured to align with the articulation section of shaft assembly (1250). Distal ends of articulation bands (1256, 1258) are secured to collar (1276). When articulation bands (1256, 1258) are translated longitudinally in an opposing fashion, a moment is created and applied to distal flange (1286) via collar (1276). This causes the articulation section of shaft assembly (1250), in particular articulation section (1262), ribbed body portions (1252, 1254), flexible portion (1257, 1259) of articulation bands (1256, 1258), and narrowed section (1285) of flexible portion (1284) of waveguide (1280), to articulate, without transferring axial forces in articulation bands (1256, 1258) to waveguide (1280).

[000217] F. Exemplary Alternative Configuration for Outer Closure Tube for Actuation of Clamp Arm

[000218] FIG. 40 shows yet another exemplary alternative shaft assembly (1300) and end

effector (1340) that may be readily incorporated into instrument (10). Shaft assembly (1300) of this example comprises an outer sheath (1302) that is configured to translate longitudinally relative to end effector (1340) to pivotally actuate a clamp arm (1342) toward and away from an ultrasonic blade (1346). Shaft assembly (1300) and end effector (1340) thus operate similar to shaft assembly (1250) and end effector (1270) described above. However, in this example, a distal end of outer sheath (1302) defines a slot (1304). Clamp arm (1342) of end effector (1340) comprises a proximal projection (1344) extending upwardly from clamp arm (1342). Proximal projection (1344) is disposed within slot (1304). As discussed above with reference to instrument (10), clamp arm (1304) is pivotally secured to a longitudinally grounded component of shaft assembly (1300), such that longitudinal translation of outer sheath (1302) causes pivoting of clamp arm (1342) toward and away from blade (1346) via engagement of projection (1344) with slot (1304). Other suitable ways in which clamp arm (1342) may be coupled with a translating outer sheath (1302) will be apparent to those of ordinary skill in the art in view of the teachings herein.

[000219] G. Exemplary Alternative Actuation of Articulation Section

[000220] FIGS. 41-42B show exemplary alternative internal components of yet another exemplary alternative shaft assembly (1400) and end effector (1440) that may be readily incorporated into instrument (10). End effector (1440) of this example comprises an ultrasonic blade (1442) and a clamp arm (1444). Clamp arm (1444) includes a clamp pad (1446) that is secured to the underside of clamp arm (1444), facing blade (1442). Blade (1442) of the present example is configured to operate substantially similar to blade (160) discussed above, such that blade (1442) is operable to vibrate at ultrasonic frequencies in order to effectively cut through and seal tissue, particularly when the tissue is being compressed between clamp pad (1446) and blade (1442). Blade (1442) is positioned at the distal end of an acoustic drivetrain. This acoustic drivetrain includes transducer assembly (12) and an acoustic waveguide (1410). The transducer assembly is operable to convert electrical power into ultrasonic vibrations, which are then transmitted along waveguide (1410), including flexible portion (1412) of waveguide (1410), to blade (1442) in accordance with known configurations and techniques. By way of example

only, this portion of the acoustic drivetrain may be configured in accordance with various teachings of various references that are cited herein.

[000221] Waveguide (1410) comprises a flexible portion (1412), a distal flange (1414), and a proximal flange (1416). As best seen in FIGS. 42A and 42B, flexible portion (1412) of waveguide (1410) includes a narrowed section (1418) located between flanges (1414, 1416). In the present example, flanges (1414, 1416) are located at positions corresponding to nodes associated with resonant ultrasonic vibrations communicated through flexible portion (1412) of waveguide (1410). Narrowed section (1418) is configured to allow flexible portion (1412) of waveguide (1410) to flex without significantly affecting the ability of flexible portion (1412) of waveguide (1410) to transmit ultrasonic vibrations. By way of example only, narrowed section (1418) may be configured in accordance with one or more teachings of U.S. Pub. No. 2014/0005701 and/or U.S. Pub. No. 2014/0114334, the disclosures of which are incorporated by reference herein. It should be understood that waveguide (1410) may be configured to amplify mechanical vibrations transmitted through waveguide (1410). Furthermore, waveguide (1410) may include features operable to control the gain of the longitudinal vibrations along waveguide (1410) and/or features to tune waveguide (1410) to the resonant frequency of the system.

[000222] In the present example, the distal end of blade (1442) is located at a position corresponding to an anti-node associated with resonant ultrasonic vibrations communicated through flexible portion (1412) of waveguide (1410), in order to tune the acoustic assembly to a preferred resonant frequency f_o when the acoustic assembly is not loaded by tissue. When transducer assembly (12) is energized, the distal end of blade (1442) is configured to move longitudinally in the range of, for example, approximately 10 to 500 microns peak-to-peak, and in some instances in the range of about 20 to about 200 microns at a predetermined vibratory frequency f_o of, for example, 55.5 kHz. When transducer assembly (12) of the present example is activated, these mechanical oscillations are transmitted through waveguide (1410) to reach blade (1442), thereby providing oscillation of blade (1442) at the resonant ultrasonic frequency. Thus, when tissue is compressed between blade (1442) and clamp pad (1446), the ultrasonic oscillation of

blade (1442) may simultaneously sever the tissue and denature the proteins in adjacent tissue cells, thereby providing a coagulative effect with relatively little thermal spread. In some versions, an electrical current may also be provided through blade (1442) and clamp arm (1444) to also cauterize the tissue. Other suitable configurations for an acoustic transmission assembly and transducer assembly will be apparent to one or ordinary skill in the art in view of the teachings herein. Similarly, other suitable configurations for end effector (1440) will be apparent to those of ordinary skill in the art in view of the teachings herein.

[000223] The internal components of shaft assembly (1400) further comprise a pair of articulation cables (1430, 1432). Proximal flange (1416) of flexible portion (1412) of waveguide (1410) comprises a plurality of through bores (1420, 1422, 1424). The distal ends of articulation cables (1430, 1432) are unitarily secured to distal flange (1414) of flexible portion (1412) of waveguide (1410). Articulation cables (1430, 1432) extend proximally from distal flange (1414) and pass freely through through bores (1420, 1422) within shaft assembly (1400). As one articulation cable (1430, 1432) is pulled proximally, this will cause an articulation section of shaft assembly (1400) to bend, thereby laterally deflecting end effector (1440) away from a longitudinal axis of shaft assembly (1400) at an articulation angle as shown in FIG. 42B. In particular, end effector (1440) will be articulated toward the articulation cable (1430, 1432) that is being pulled proximally. During such articulation, the other articulation cable (1430, 1432) will be pulled distally by distal flange (1414) of flexible portion (1412) of waveguide (1410). Flexible portion (1412) is configured to effectively communicate ultrasonic vibrations from waveguide (1410) to blade (1442) even when the articulation section of shaft assembly (1440) is in an articulated state as shown in FIG. 42B.

[000224] Distal flange (1414) of flexible portion (1412) of waveguide (1410) is fixedly secured to a distal end of shaft assembly (1400). When articulation cables (1430, 1432) are translated longitudinally in an opposing fashion, a moment is created and applied to the distal end shaft assembly (1400) via distal flange (1414). This causes the articulation section of shaft assembly (1400) and narrowed section (1418) of flexible portion (1412) of waveguide (1410) to articulate, without transferring axial forces in articulation cables

(1430, 1432) to waveguide (1410). It should be understood that one articulation cable (1430, 1432) may be actively driven distally while the other articulation cable (1430, 1432) is passively permitted to retract proximally. As another merely illustrative example, one articulation cable (1430, 1432) may be actively driven proximally while the other articulation cable (1430, 1432) is passively permitted to advance distally. As yet another merely illustrative example, one articulation cable (1430, 1432) may be actively driven distally while the other articulation cable (1430, 1432) is actively driven proximally. Various suitable ways in which articulation cables (1430, 1432) may be driven will be apparent to those of ordinary skill in the art in view of the teachings herein. It should also be understood that one or more spacers may be used to prevent articulation cables (1430, 1432) from contacting waveguide (1410) between flanges (1414, 1416).

[000225] An upper portion of clamp arm (44) is pivotally secured to a distally projecting tongue (1443) of distal flange (1414) of waveguide (1410). Clamp arm (1444) is operable to selectively pivot toward and away from blade (1442) to selectively clamp tissue between clamp pad (1446) and blade (1442). A cable (1428) is secured to a lower portion of clamp arm (1444). Cable (1428) extends proximally from clamp arm (1444) and passes freely through distal flange (1414) and freely through through bore (1424) of proximal flange (1416) within shaft assembly (1400). Cable (1428) is operable to translate longitudinally relative to the articulation section of shaft assembly (1400) to selectively pivot clamp arm (1444) toward and away from blade (1442). Cable (1428) may be coupled with a trigger such that clamp arm (1444) pivots toward and away from blade (1442) in response to pivoting of the trigger. Clamp arm (1444) may be biased toward the open position, such that (at least in some instances) the operator may effectively open clamp arm (1444) by releasing a grip on the trigger.

[000226] IV. Exemplary Alternative Waveguide Configurations

[000227] It may be desirable to provide for alternative engagement between waveguide (180) and shaft assembly (30). As will be discussed in more detail below, FIGS. 43-50 show various examples of how waveguide (180) may engage shaft assembly (30). While various examples of how waveguide (180) may engage shaft assembly (30) will be

described in greater detail below, other examples will be apparent to those of ordinary skill in the art according to the teachings herein. It should be understood that the examples of waveguides described below may function substantially similar to clamp waveguide (180) discussed above. In particular, the examples of waveguides described below are operable to transmit ultrasonic vibrations from transducer (12) to an ultrasonic blade.

[000228] FIGS. 43-46 show an exemplary alternative waveguide (1500) that may be readily incorporated into instrument (10). Waveguide (1500) of this example comprises an ultrasonic blade (1502) and a flexible portion (1504). Blade (1502) of the present example is configured to operate substantially similar to blade (160) discussed above except for the differences discussed below. In particular, blade (1502) of the present example is operable to vibrate at ultrasonic frequencies in order to effectively cut through and seal tissue. As discussed above, transducer assembly (12) is operable to convert electrical power into ultrasonic vibrations, which are then transmitted along waveguide (1502), including flexible portion (1504) of waveguide (1502) to blade (1502) in accordance with known configurations and techniques. By way of example only, this portion of the acoustic drivetrain may be configured in accordance with various teachings of various references that are cited herein.

[000229] As best seen in FIG. 43, flexible portion (1504) of waveguide (1500) includes a distal flange (1506), a proximal flange (1508), and a narrowed section (1510) located between flanges (1506, 1508). In the present example, flanges (1506, 1508) are located at positions corresponding to nodes associated with resonant ultrasonic vibrations communicated through flexible portion (1504) of waveguide (1500). Narrowed section (1510) is configured to allow flexible portion (1504) of waveguide (1500) to flex without significantly affecting the ability of flexible portion (1504) of waveguide (1500) to transmit ultrasonic vibrations. By way of example only, narrowed section (1510) may be configured in accordance with one or more teachings of U.S. Pub. No. 2014/0005701 and/or U.S. Pub. No. 2014/0114334, the disclosures of which are incorporated by reference herein. It should be understood that waveguide (1500) may be configured to amplify mechanical vibrations transmitted through waveguide (1500). Furthermore,

waveguide (1500) may include features operable to control the gain of the longitudinal vibrations along waveguide (1500) and/or features to tune waveguide (1500) to the resonant frequency of the system.

[000230] In the present example, the distal end of blade (1502) is located at a position corresponding to an anti-node associated with resonant ultrasonic vibrations communicated through flexible portion (1504) of waveguide (1500), in order to tune the acoustic assembly to a preferred resonant frequency f_o when the acoustic assembly is not loaded by tissue. When transducer assembly (12) is energized, the distal end of blade (1502) is configured to move longitudinally in the range of, for example, approximately 10 to 500 microns peak-to-peak, and in some instances in the range of about 20 to about 200 microns at a predetermined vibratory frequency f_o of, for example, 55.5 kHz. When transducer assembly (12) of the present example is activated, these mechanical oscillations are transmitted through waveguide (1500) to reach blade (1502), thereby providing oscillation of blade (1502) at the resonant ultrasonic frequency. Thus, the ultrasonic oscillation of blade (1502) may simultaneously sever the tissue and denature the proteins in adjacent tissue cells, thereby providing a coagulative effect with relatively little thermal spread. In some versions, an electrical current may also be provided through blade (1502) to also cauterize the tissue. While some configurations for an acoustic transmission assembly and transducer assembly (12) have been described, still other suitable configurations for an acoustic transmission assembly and transducer assembly (12) will be apparent to one or ordinary skill in the art in view of the teachings herein.

[000231] Waveguide (1500) further comprises a pair of overmolds (1512, 1514) secured about an exterior of flanges (1506, 1508). Overmolds (1512, 1514) of flanges (1506, 1508) are configured to engage an interior surface of shaft assembly (30). Overmolds (1512, 1514) provide an acoustic barrier between waveguide (1500) and shaft assembly (30) to thereby lessen the effect that engagement between waveguide (1500) and shaft assembly (30) may have upon transmission of ultrasonic vibrations within waveguide (1500). As shown in FIG. 44, flanges (1506, 1508) of the present example comprise an annular groove (1507) formed in an exterior surface of flanges (1506, 1508). Overmolds (1512, 1514) may be disposed within groove (1507) to thereby improve engagement

between overmolds (1512, 1514) and flanges (1506, 1508). Overmolds (1512, 1514) may comprise polytetrafluoroethylene (PTFE), rubber, silicone, plastic, and/or any other suitable material(s).

[000232] As best seen in FIG. 46, flanges (1506, 1508) of the present example have a circular cross-sectional profile. It should be understood, however, that any other suitable shapes may be used. For instance, FIGS. 47-48 show an exemplary alternative waveguide (1550) with a flange (1556) having an oblong shape. In particular, flange (1556) includes a pair of flats (1557). A blade (1552) is located distal to flange (1556). An overmold (1562) is positioned about flange (1556) and has a cross-sectional profile complementing the cross-sectional profile of flange (1556). FIGS. 49-50 show another exemplary alternative waveguide (1600) with a flange (1606) having an oblong shape. In particular, flange (1606) includes a pair of flats (1607) and a pair of longitudinally extending grooves (1609). A blade (1602) is located distal to flange (1606). An overmold (1612) is positioned about flange (1606) and has a cross-sectional profile complementing the cross-sectional profile of flange (1606). Other suitable configurations that may be used for flanges will be apparent to those of ordinary skill in the art in view of the teachings herein.

[000233] V. Exemplary Alternative Instrument with Dual Role Bands and Dual Actuators

[000234] FIGS. 51-53 show another exemplary ultrasonic surgical instrument (2000) that is configured and operable substantially similar to instrument (10) except for the differences discussed below. Instrument (2000) of this example comprises a handle assembly (2020), a shaft assembly (2030), and an end effector (2040). Handle assembly (2020) includes a body (2022) that defines a pistol grip (2024). A trigger (2028) is pivotally coupled with body (2022) such that trigger (2028) is pivotable toward and away from pistol grip (2024). An articulation and closure actuation assembly (2100) is slidably coupled with handle assembly (2020) as will be described in greater detail below. It should be understood that handle assembly (2020) may also include a transducer assembly like transducer assembly (12), buttons like buttons (26), and/or various other features as

described above with respect to handle assembly (20).

[000235] Shaft assembly (2030) of the present example comprises a proximal outer sheath (2032), a distal outer sheath (2033), an inner tubular body (2230), and a flex housing (2232). It should be understood that proximal outer sheath (2032) is shown in cross-section in FIGS. 51 and 53 to reveal internal components of shaft assembly (2030). Shaft assembly (2030) further includes an articulation section (2130), which enables end effector (2040) to be deflected laterally away from the longitudinal axis of the proximal portion of shaft assembly (2030). Proximal outer sheath (2032) distally terminates at the proximal end of articulation section (2130). Distal outer sheath (2033) proximally terminates at the distal end of articulation section (2130). Articulation section (2130) is thus longitudinally interposed between outer sheaths (2032, 2033). Inner tubular body (2230) also distally terminates at the proximal end of articulation section (2130). Flex housing (2232) extends along the length of articulation section (2130). Flex housing (2232) is longitudinally secured relative to inner tubular body (2230), which is further longitudinally secured relative to handle assembly (2020). Flex housing (2232) is thus longitudinally grounded relative to handle assembly (2020), though flex housing (2232) is still configured to bend in lateral deflection during articulation. In some versions, flex housing (2232) is configured similar to the combination of ribbed body portions (132, 134) described above.

[000236] Shaft assembly (2030) of the present example further includes a pair of articulation bands (2140, 2142). The distal ends of articulation bands (2140, 2142) are secured to distal outer sheath (2033). The proximal ends of articulation bands (2140, 2142) are coupled with articulation and closure actuation assembly (2100), as will be described in greater detail below. Articulation bands (2140, 2142) pass through a space defined between inner tubular body (2230) and proximal outer sheath (2032). A set of retention collars (133) are positioned about articulation bands (2140, 2142) in articulation section (2130). Articulation bands (2140, 2142) are operable to actuate articulation section (2130), to thereby deflect end effector (2040) laterally to an articulated position. In particular, articulation bands (2140, 2142) translate in an opposing fashion to create and apply a moment to distal outer sheath (2033), thereby providing articulation of

articulation section (2130) and end effector (2040), similar to bands (140, 142) described above. It should therefore be understood that end effector (2040) will deflect laterally in the direction of whichever articulation band (2140, 2142) is moving proximally; while the other articulation band (2140, 2142) moves distally.

[000237] End effector (2040) of the present example comprises a clamp arm (2044) and an ultrasonic blade (2160). Ultrasonic blade (2160) is formed at the distal end of a waveguide (2162). In the present example, waveguide (2162) is configured and operable identically to waveguide (180) described above, such that waveguide (2162) is configured to bend with articulation section (2130) to achieve an articulated state. Clamp arm (2044) is operable to pivot toward and away from ultrasonic blade (2160), to thereby capture and compress tissue against ultrasonic blade (2160). In particular, one portion of clamp arm (2044) is pivotally coupled with the distal end of flex housing (2232) (or some component that is longitudinally grounded to flex housing (2232)). Another portion of clamp arm (2044) is pivotally coupled with distal outer sheath (2033). Distal outer sheath (2033) is operable to translate longitudinally relative to flex housing (2232) and the other components of shaft assembly (2030) that are longitudinally grounded relative to handle assembly (2022). It should therefore be understood that clamp arm (2044) will pivot relative to blade (2160) in response to longitudinal translation of distal outer sheath (2033) relative to flex housing (2232) and the other components of shaft assembly (2030) that are longitudinally grounded relative to handle assembly (2022).

[000238] Articulation and closure actuation assembly (2100) of the present example comprises a housing (2110) and a control knob (2126), which is rotatable relative to housing (2110). As best seen in FIGS. 52-53, where housing (2110) is shown in cross-section, a pinion gear (2122) is unitarily secured to control knob (2126), such that pinion gear (2122) rotates unitarily with control knob (2126) relative to housing (2110). Intermediate gears (2124, 2126) are positioned on opposite sides of pinion gear (2122) and mesh with pinion gear (2122), such that intermediate gears (2124) rotate in response to rotation of control knob (2126) and pinion gear (2122). As shown in FIG. 52, intermediate gear (2124) extends vertically to mesh with a rack (2240) of articulation band (2140), providing a rack and pinion relationship between intermediate gear (2124)

and articulation band (2140). Thus, when intermediate gear (2124) rotates, articulation band (2140) translates longitudinally. Articulation band (2140) will therefore translate longitudinally in response to rotation of control knob (2126). While not shown, intermediate gear (2126) meshes with a rack of articulation band (2142) in a similar fashion. Articulation bands (2140, 2142) will thus translate longitudinally in an opposing fashion in response to rotation of control knob (2126). It should therefore be understood that articulation section (2130) will bend to deflect end effector (2040) in a first direction when control knob (2126) is rotated in a first direction; and will bend to deflect end effector (2040) in a second direction when control knob (2126) is rotated in a second direction. In some versions, knob (2126) is oriented to extend along a plane that is parallel with the longitudinal axis of shaft assembly (2030) when articulation section (213) is straight; and obliquely relative to the longitudinal axis of shaft assembly (2030) when articulation section (213) is bent, such that control knob (2126) provides visual feedback indicating the state of articulation.

[000239] As noted above, articulation and closure actuation assembly (2100) is configured to slide longitudinally relative to handle assembly (2020). Articulation and closure actuation assembly (2100) is pivotally coupled with trigger (2028) via a link (2090). In particular, one end of link (2090) is pivotally coupled with the underside of housing (2110) and another end of link (2090) is pivotally coupled with the upper end of trigger (2028). Thus, as trigger (2028) is pivoted toward pistol grip (2024), link (2090) drives articulation and closure actuation assembly (2100) distally relative to handle assembly (2020). As trigger (2028) is pivoted back away from pistol grip (2024), link (2090) drives articulation and closure actuation assembly (2100) proximally relative to handle assembly (2020). When articulation and closure actuation assembly (2100) translates relative to handle assembly (2020), intermediate gears (2124, 2126) drive articulation bands (2140, 2142) longitudinally together in the same direction simultaneously. When articulation bands (2140, 2142) translate longitudinally together in the same direction simultaneously, articulation bands (2140, 2142) drive distal outer sheath (2033) longitudinally. Such longitudinal motion of distal outer sheath (2033) actuates clamp arm (2044) as described above. It should therefore be understood that, as trigger (2028)

is pivoted toward pistol grip (2024), clamp arm (2044) is driven toward blade (2160) via link (2090), articulation and closure actuation assembly (2100), articulation bands (2140, 2142), and distal outer sheath (2033). Likewise, as trigger (2028) is pivoted away from pistol grip (2024), clamp arm (2044) is driven away from blade (2160) via link (2090), articulation and closure actuation assembly (2100), articulation bands (2140, 2142), and distal outer sheath (2033).

[000240] It should be understood that articulation and closure actuation assembly (2100) may include one or more features that are operable to selectively lock the straight/articulation state of articulation section (2130) or at least resist a change in the straight/articulation state of articulation section (2130). By way of example only, such resistance may be provided through friction, detent features, etc. Other suitable ways in which articulation and closure actuation assembly (2100) may selectively lock the straight/articulation state of articulation section (2130) or at least resist a change in the straight/articulation state of articulation section (2130) will be apparent to those of ordinary skill in the art in view of the teachings herein.

[000241] VI. Exemplary Ultrasonic Surgical Instrument with Motorized Articulation

[000242] The above examples are discussed in the context of manual control of articulation in a shaft assembly. However, it should also be understood that articulation may be motorized. For instance, FIG. 54 shows an exemplary instrument (3010) that is in many ways similar to instrument (10) described above. Instrument (3010) of this example includes a handle assembly (3020), a shaft assembly (30), and an end effector (40). Handle assembly (3020) comprises a body (3022) including a pistol grip (3028) and a pair of buttons (3026). Handle assembly (3020) also includes a trigger (3028) that is pivotable toward and away from pistol grip (3024). End effector (40) includes an ultrasonic blade (160) and a pivoting clamp arm (44). Clamp arm (44) is coupled with trigger (3028) such that clamp arm (44) is pivotable toward ultrasonic blade (160) in response to pivoting of trigger (3028) toward pistol grip (3024); and such that clamp arm (44) is pivotable away from ultrasonic blade (160) in response to pivoting of trigger (3028) away from pistol grip (3024).

[000243] An ultrasonic transducer assembly (12) extends proximally from body (3022) of handle assembly (3020). Transducer assembly (12) is coupled with a generator (16) via a cable (14), such that transducer assembly (12) receives electrical power from generator (16). Piezoelectric elements in transducer assembly (12) convert that electrical power into ultrasonic vibrations. Generator (16) may include a power source and control module that is configured to provide a power profile to transducer assembly (12) that is particularly suited for the generation of ultrasonic vibrations through transducer assembly (12).

[000244] Shaft assembly (30) of the present example extends distally from handle assembly (3020). Shaft assembly (30) includes an articulation section (130), which is located at a distal portion of shaft assembly (30), with end effector (40) being located distal to articulation section (130). A knob (3031) is secured to a proximal portion of proximal outer sheath (32). Knob (3031) is rotatable relative to body (3022), such that shaft assembly (30) is rotatable about a longitudinal axis relative to handle assembly (3020). Such rotation may provide rotation of end effector (40), articulation section (130), and shaft assembly (30) unitarily. Of course, rotatable features may simply be omitted if desired. Articulation section (130) is operable to selectively position end effector (40) at various lateral deflection angles relative to a longitudinal axis defined by outer sheath (32). Articulation section (130) may take a variety of forms, including but not limited to any of the forms described herein.

[000245] It should be understood that all of the above described features of instrument (3010) are substantially identical to the same features of instrument (10), except for the differences described below. In particular, instrument (3010) of this example lacks manually operated articulation control assembly (100). Instead, instrument (3010) includes a motor (3100) that is coupled with articulation section (130) to drive articulation section (130) in a motorized fashion. Various suitable ways in which motor (3100) may be coupled with articulation section (130) to drive articulation section (130) in a motorized fashion will be apparent to those of ordinary skill in the art in view of the teachings herein. A user input feature (3200) is in communication with motor (3100) and is operable to selectively activate motor (3100) in response to user input. Various

suitable forms that user input feature (3200) may take will be apparent to those of ordinary skill in the art in view of the teachings herein. It should also be understood that more than one user input feature (3200) may be provided (e.g., one user input feature (3200) for each direction of articulation, etc.).

[000246] In some versions, motor (3100) receives power from an external source (e.g., generator (16), etc.) via cable (14). In some other versions, motor (3100) receives power from an internal source (e.g., one or more batteries or other portable power sources in body (3022) of handle assembly (3020), etc.). It should also be understood that motor (3100) may be located at any suitable position within body (3022) of handle assembly (3020). Alternatively, motor (3100) may be located external to body (3022). Other suitable ways in which motor (3100) may be incorporated in instrument (3010) to drive articulation section (130) will be apparent to those of ordinary skill in the art in view of the teachings herein.

[000247] While instrument (3010) is described above as providing motorized driving of articulation section (130), it should be understood that instrument (3010) may instead incorporate any of the other articulation sections described herein. In other words, any of the articulation sections described herein may be driven in a motorized fashion.

[000248] VII. Exemplary Ultrasonic Surgical Instrument with Restricted Articulation

[000249] In some instances, it may be desirable to restrict the articulation angle of waveguide (180). For instance, if waveguide (180) is articulated from the longitudinal axis defined by proximal outer sheath (32) at too steep an angle, waveguide (180) could permanently deform leading to undesirable effects. Restricting the maximum articulation of waveguide (180) may therefore help maintain the structural integrity of waveguide (180). A merely illustrative example of how the articulation angle may be restricted will be described in greater detail below.

[000250] A. Exemplary End Effector and Acoustic Drivetrain

[000251] FIG. 55A illustrates an exemplary shaft assembly (4300) and an exemplary end effector (4340). Shaft assembly (4300) and end effector (4340) can be utilized in

instrument (10), substituting for shaft assembly (30) and end effector (40). End effector (4340) is substantially similar to end effector (40). End effector (4340) includes an ultrasonic blade (4260) and a pivoting clamp arm (4344). Claim arm (4344) includes a clamp pad (4346) that is secured to the underside of clamp arm (4344), facing ultrasonic blade (4260). Clamp pad (4346) may comprise polytetrafluoroethylene (PTFE) and/or any other suitable material(s).

[000252] Clamp arm (4344) is pivotally secured to a distally projecting tongue (4343) of an upper distal shaft element (4272), which is fixedly secured within a distal portion of a distal outer sheath (4333). Lower distal shaft element (4270) is slidably disposed within the distal portion of distal outer sheath (4333). Trigger (28) is operable to translate lower distal shaft element (4270) along a path that is parallel to the longitudinal axis defined by distal outer sheath (4333). Specifically, trigger (28) can translate lower distal shaft element (4272) proximally when trigger (28) is pivoted toward pistol grip (24) and distally when trigger (28) is pivoted away from pistol grip (24). A pair or arms (4256) extend transversely from clamp arm (4344) and are pivotally secured to lower distal shaft element (4270). Therefore, clamp arm (4344) is coupled with trigger (28) such that clamp arm (4344) is pivotable toward ultrasonic blade (4260) in response to pivoting of trigger (28) toward pistol grip (24); and such that clamp arm (4344) is pivotable away from ultrasonic blade (4260) in response to pivoting of trigger (28) away from pistol grip (24). Various suitable ways in which clamp arm (4344) may be coupled with trigger (28) will be apparent to those of ordinary skill in the art in view of the teachings herein. In some versions, one or more resilient members are used to bias clamp arm (4344) and/or trigger (28) to the open position shown in FIG. 55A. Drive features enabling trigger (28) to close clamp arm (4344) are the same for the drive features described above enabling trigger (28) to close clamp arm (44).

[000253] Blade (4260) of the present example is operable to vibrate at ultrasonic frequencies in order to effectively cut through and seal tissue, particularly when the tissue is being compressed between clamp pad (4346) and blade (4260). Blade (4260) is positioned at the distal end of an acoustic drivetrain. This acoustic drivetrain includes transducer assembly (12) and an acoustic waveguide (4280). Acoustic waveguide (4280)

comprises a flexible portion (4266). Transducer assembly (12) includes a set of piezoelectric discs (not shown) located proximal to a horn (not shown) of waveguide (4280). The piezoelectric discs are operable to convert electrical power into ultrasonic vibrations, which are then transmitted along waveguide (4280), including flexible portion (4266) of waveguide (4280) to blade (4260) in accordance with known configurations and techniques. By way of example only, this portion of the acoustic drivetrain may be configured in accordance with various teachings of various references that are cited herein.

[000254] As best seen in FIG. 56, flexible portion (4266) of waveguide (4280) includes a distal flange (4236), a proximal flange (4238), and a narrowed section (4267) located between flanges (4236, 4238). In the present example, flanges (4236, 4238) are located at positions corresponding to nodes associated with resonant ultrasonic vibrations communicated through flexible portion (4266) of waveguide (4280). Narrowed section (4267) is configured to allow flexible portion (4266) of waveguide (4280) to flex without significantly affecting the ability of flexible portion (4266) of waveguide (4280) to transmit ultrasonic vibrations. By way of example only, narrowed section (4267) may be configured in accordance with one or more teachings of U.S. Pub. No. 2014/0005701 and/or U.S. Pub. No. 2014/0114334, the disclosures of which are incorporated by reference herein. It should be understood that waveguide (4280) may be configured to amplify mechanical vibrations transmitted through waveguide (4280). Furthermore, waveguide (4280) may include features operable to control the gain of the longitudinal vibrations along waveguide (4280) and/or features to tune waveguide (4280) to the resonant frequency of the system. Various suitable ways in which waveguide (4280) may be mechanically and acoustically coupled with transducer assembly (12) will be apparent to those of ordinary skill in the art in view of the teachings herein.

[000255] In the present example, the distal end of blade (4260) is located at a position corresponding to an anti-node associated with resonant ultrasonic vibrations communicated through flexible portion (4266) of waveguide (4280), in order to tune the acoustic assembly to a preferred resonant frequency f_o when the acoustic assembly is not loaded by tissue. When transducer assembly (12) is energized, the distal end of blade

(4260) is configured to move longitudinally in the range of, for example, approximately 10 to 500 microns peak-to-peak, and in some instances in the range of about 20 to about 200 microns at a predetermined vibratory frequency f_o of, for example, 55.5 kHz. When transducer assembly (12) of the present example is activated, these mechanical oscillations are transmitted through waveguide (4280) to reach blade (4260), thereby providing oscillation of blade (4260) at the resonant ultrasonic frequency. Thus, when tissue is secured between blade (4260) and clamp pad (4346), the ultrasonic oscillation of blade (4260) may simultaneously sever the tissue and denature the proteins in adjacent tissue cells, thereby providing a coagulative effect with relatively little thermal spread. In some versions, an electrical current may also be provided through blade (4260) and clamp arm (4344) to also cauterize the tissue. While some configurations for an acoustic transmission assembly and transducer assembly (12) have been described, still other suitable configurations for an acoustic transmission assembly and transducer assembly (12) will be apparent to one or ordinary skill in the art in view of the teachings herein. Similarly, other suitable configurations for end effector (4340) will be apparent to those of ordinary skill in the art in view of the teachings herein.

[000256] B. Exemplary Shaft Assembly and Alternative Articulation Section

[000257] When incorporated into instrument (10) described above, shaft assembly (4300) of the present example would extend distally from handle assembly (20). As shown in FIGS. 55A-56, shaft assembly (4300) includes distal outer sheath (4333) and a proximal outer sheath (4332) that encloses clamp arm (4344) drive features and the above-described acoustic transmission features. Shaft assembly (4300) further includes an articulation section (4230), which is located at a distal portion of shaft assembly (4300), with end effector (4340) being located distal to articulation section (4230).

[000258] Similar to articulation section (130), articulation section (4230) is operable to selectively position end effector (4340) at various lateral deflection angles relative to a longitudinal axis defined by outer sheath (4332). Articulation section (4230) may take a variety of forms. By way of example only, articulation section (4230) may be configured in accordance with one or more teachings of U.S. Pub. No. 2012/0078247, the disclosure

of which is incorporated by reference herein. As another merely illustrative example, articulation section (4230) may be configured in accordance with one or more teachings of U.S. Pub. No. 2014/0005701 and/or U.S. Pub. No. 2014/0114334, the disclosures of which are incorporated by reference herein. Various other suitable forms that articulation section (4230) may take will be apparent to those of ordinary skill in the art in view of the teachings herein.

[000259] As illustrated in FIGS. 55A-56, articulation section (4230) of this example comprises a set of three retention collars (4500), a distal mating feature (4332A) of proximal outer sheath (4332), a proximal mating feature (4333A) of distal outer sheath (4333), a set of body portions (4700, 4800, 4900), a flexible locking feature (4600), and a pair of articulation bands (4440, 4442) extending along channels (4235A-C) defined by translation members (4261, 4262), proximal body potion (4900) and distal body portion (4800). Distal mating feature (4332A) and proximal mating feature (4333A) both comprise insert holes (4334).

[000260] As illustrated in FIGS. 57-58, each retention collar (4500) comprises a first angled contact surface (4501), a second angled contact surface (4525), a circular segment surface (4505), and a pair of flattened surfaces (4510) extending inwardly from circular segment surface (4505). Flattened surfaces (4510) define a pathway (4520) and a pair of insert holes (4515). First angled contact surface (4501) is configured to contact a complementary first angled contact surface (4501) of another retention collar (4500). Distal mating feature (4332A) of proximal outer sheath (4332) and proximal mating feature (4333A) of distal outer sheath (4333) are substantially similar to retention collar (4500), but without first angled contact surface (4501) and second angled contact surface (4525). As best seen in FIG. 68, distal mating feature (4332A) and proximal mating feature (4333A) each have a first angled contact surface (4335) that complements first angled contact surfaces (4501) of retention collars (4501).

[000261] As illustrated in FIGS. 59-60, flexible locking feature (4600) comprises a connecting spine (4630), pairs of resilient legs (4625) extending from connecting spine (4630), tabs (4620) located at the termination of each resilient leg (4625), and a rib (4605) running longitudinally along connecting spine (4630) and in between each pair of

resilient legs (4625). Each tab (4625) further comprises an angled surface (4610) and a transverse surface (4615).

[000262] As illustrated in FIGS. 62-63, each intermediate body portion (4700) comprises an arched base (4705), an articulation band ledge (4710), a tab window (4715), an exterior surface (4735), an interior surface (4750), a leg channel (4740), and a cable channel (4774). Tab window (4715) is defined by transverse walls (4725), tab floor (4730), and tab ceiling (4720). Leg channel (4740) is defined by interior tab contact surface (4745) and transverse walls (4725). Articulation band ledge (4710) extends transversely from exterior surface and terminates at arched base (4705). Each articulation band ledge (4710) is configured to at least partially support or otherwise accommodate a corresponding articulation band (4440, 4442) between second channel for articulation band (4235B) and third channel for articulation band (4235C). Leg channel (4740) is configured and dimensioned to act as a guide for insertion of resilient legs (4625) of flexible locking feature (4600). Cable channel (4774) provides a linear path for a drive feature (e.g., cable (174) as described above) to communicate with trigger (28) in order to move clamp arm (4344).

[000263] FIGS. 64-65 illustrate distal body portion (8400). Similarly to intermediate body portion (4700), distal body portion (4800) comprises an arched base (4805), an articulation band ledge (4810), a tab window (4815), an exterior surface (4835), an interior surface (4850), a leg channel (4840), and a cable channel (4874). Tab window (4815) is defined by transverse walls (4825), tab floor (4830), and tab ceiling (4820). Leg channel (4840) is defined by interior tab contact surface (4845) and transverse walls (4825).

[000264] All of the features mentioned above for the distal body portion (4800) are substantially the same as their counterparts of intermediate body portion (4700). However, distal body portion (4800) additionally comprises a resilient tab (4885), a mating feature for articulation band (4890), a narrowed pathway (4895), and third channel for articulation band (4235C). Resilient tab (4885) further comprises a transverse surface (4875) and an extending surface (4850). Articulation band ledge (4810) extends transversely from exterior surface and terminates at arched base (4805).

Each articulation band ledge (4810) is configured to at least partially support or otherwise accommodate a corresponding articulation band (4440, 4442) between second channel for articulation band (4235B) and third channel for articulation band (4235C). Leg channel (4840) is configured and dimensioned to act as a guide for insertion of resilient legs (4625) of flexible locking feature (4600). Cable channel (4874) provides a linear path for a drive feature (e.g., cable (174) as described above) to communicate with trigger (28) in order to move clamp arm (4344).

[000265] FIG. 66 illustrates proximal body portion (4900). Similarly to intermediate body portion (4700), proximal body portion (4900) comprises an arched base (4905), an articulation band ledge (4910), a tab window (4915), an exterior surface (4935), an interior surface (4950), a leg channel (4940), and a cable channel (4974). Tab window (4915) is defined by transverse walls (4925), tab floor (4930), and tab ceiling (4920). Leg channel (4940) is defined by interior tab contact surface (4945) and transverse walls (4925).

[000266] All of the features mentioned above for the proximal body portion (4900) are substantially the same as their counterparts for both intermediate body portions (4700) and distal body portion (4900). However, proximal body portion (4900) additionally comprises second channel (4235B) for articulation band (4440, 4442). Articulation band ledge (4910) extends transversely from exterior surface and terminates at arched base (4905). Each articulation band ledge (4910) is configured to at least partially support or otherwise accommodate a corresponding articulation band (4440, 4442) as articulation band ledge (4910) helps partially define second channel (4235B) for articulation band (4440, 4442). Leg channel (4940) is configured and dimensioned to act as a guide for insertion of resilient legs (4625) of flexible locking feature (4600). Cable channel (4974) provides a linear path for a drive feature (e.g., cable (174) as described above) to communicate with trigger (28) in order to move clamp arm (4344).

[000267] FIGS. 55A-56 illustrate the assembly of articulation section (4230). As illustrated in FIGS. 55D, 56, and 61, body portions (4700, 4800, 4900) are longitudinally aligned with one another between flanges (4236, 4238). In the present example, body portions (4700, 4800, 4900) are formed as discrete pieces positioned adjacent to each other,

thereby promoting lateral flexing of articulation section (4230). Alternatively, body portions (4700, 4800, 4900) may be joined together by living hinges or any other structures that provide lateral flexing of articulation section (4230) as will be apparent to those of ordinary skill in the art in view of the teachings herein. In the current example, there is one proximal body portion (4900), three intermediate body portions (4700), and one distal body portion (4800). Of course, any suitable number of intermediate body portions (4700) may be provided.

[000268] As illustrated in FIGS. 55C and 56, body portions (4700, 4800, 4900) also partially define a channel (4235B, 4235C) that is configured to receive articulation band (4440) while allowing articulation band (4440) to slide relative to proximal body portion (4900) and intermediate body portions (4700). Unlike the previously mentioned articulation section (130), articulation bands (4440, 4442) are fixed to distal body portion (4800) rather than distal flange (4236). Because of this, distal flange (4236) does not require features, such as flats (192) to accommodate articulation bands (4440, 4442). Additionally, the shortened distance of articulation bands (4440, 4442) provides a user with greater control of articulation. During longitudinal deflection, more force is required from the shortened length of articulation bands (4440, 4442) to provide an equivalent moment as provided by longer articulation bands (140, 142). Therefore, a user has more tolerance control of the articulation angle due to the greater force required with shorter articulation bands (4440, 4442) than longer articulation bands (140, 142).

[000269] As illustrated in FIG. 55B, Proximal body portion (4900) is located within distal mating feature (4332A) of proximal outer sheath (4332) while distal body portion (4800) is located within proximal mating feature (4333A) of distal outer sheath (4333). Intermediate body portions (4700) are located in between proximal outer sheath (4332) and distal outer sheath (4333). More specifically, insert holes (4515) are located directly above leg channels (4740, 4840, 4940) of body portions (4700, 4800, 4900) in order to provide an insertion pathway for resilient legs (4625) of flexible locking feature (4600). In other words, retention collars (4500) are located at longitudinal positions corresponding to intermediate body portions (4700) while proximal mating feature (4333A) and distal mating feature (4332A) are located at longitudinal positions

corresponding to distal body portion (4800) and proximal body portion (4900) respectively. Additionally, resilient tab (4885) of distal body portion (4800) is sized to fit within coupling features (4338) of distal outer sheath (4333), thereby ensuring distal body portion (4800) is fixed relative to distal outer sheath (4333). Of course, a similar feature can be added to proximal body portion (4900) to ensure sufficient attachment to proximal outer sheath (4332).

[000270] As illustrated in FIGS. 55A and 67-68, flexible locking feature (4600) is inserted into distal mating feature (4332A), retention collars (4500), proximal mating feature (4333A), proximal body portion (4900), intermediate body portions (4700), and distal body portion (4800). Flexible locking feature (4600) unitarily couples distal mating feature (4332A), retention rings (4500), and proximal mating feature (4333A) with proximal body portion (4900), intermediate body portions (4700), and distal body portion (4800) respectively. This coupling can be seen in greater detail in FIG. 67. When tabs (4620) of resilient legs (4625) are first inserted into insert holes (4515), resilient legs (4625) must be compressed inwardly to accommodate transverse surface (4615). Contact between interior tab contact surface (4745) and tab (4620) keeps resilient legs (4625) in a compressed position. Once transverse surface (4615) passes interior tab contact surface (4745) to tab window (4715), resilient legs (4625) transition from a compressed state to an original state substantially parallel with each other. Tab (4620) then enters through tab window (4715). At this point, flexible locking member (4600) is locked in place through a snap fit due to overlapping dimensions of tab ceiling (4720) and transverse surface (4615). Rib (4605) is now located within pathway (4520) of retention collar (4500). No object is in contact with the narrow section of waveguide (4267).

[000271] Due to the insertion of resilient legs (4625) into insert holes (4515) and leg channel (4740), retention collar (4500) is fixed along the longitudinal axis relative to intermediate body portions (4700). Similarly, due to the insertion of resilient legs (4625) into insert holes (4334) and leg channel (4840, 4940), proximal body portion (4900) and distal body portion (4800) are fixed along the longitudinal axis relative to distal mating feature (4332A) and proximal mating feature (4333A).

[000272] As mentioned before, the distal ends of articulation bands (4440, 4442) are

unitarily secured to distal body portion (4800) via mating feature for articulation band (4890). When articulation bands (4440, 4442) translate longitudinally in an opposing fashion (e.g., one articulation band (4440) translating distally while the other articulation band (4442) simultaneously translates proximally), this will cause articulation section (4330) to bend due to creation of a moment applied to a distal end of distal outer sheath (4333) via upper distal shaft element (4272). The force provided by translation of articulation bands (4440, 4442) is communicated to distal body portion (4800) via a mating feature for articulation band (4890), which in turn is communicated to distal outer sheath (4333) via the connection of resilient tab (4885) of distal body portion (4800) and coupling feature (4338) of distal outer sheath (4333).

[000273] Distal outer sheath (4333) is secured to waveguide (4280) at distal flange (4236), which is located at a position corresponding a node associated with resonant ultrasonic vibrations communicated through waveguide (4280). Therefore, the force required to bend waveguide (4280) for articulation is still communicated to waveguide (4280) at the nodal position of distal flange (4236), similar to waveguide (180). The bend thereby laterally deflects end effector (4340) away from the longitudinal axis of shaft assembly (4300) from a straight configuration as shown in FIGS. 68-69A to an articulated configuration as shown in FIG. 69B. In particular, end effector (4340) will be articulated toward the articulation band (4440, 4442) that is being pulled proximally. During such articulation, the other articulation band (4440, 4442) may be pulled distally by upper distal shaft element (4272). Alternatively, the other articulation band (4440, 4442) may be driven distally by an articulation control.

[000274] Flexible locking feature (4600) and narrowed section (4267) are sufficiently flexible to accommodate the above-described articulation of end effector (4340). Intermediate body portions (4700) and retention collars (4500) are able to articulate by moving relative to each other due to force provided by flexible locking feature (4600). Furthermore, flexible acoustic waveguide (4266) is configured to effectively communicate ultrasonic vibrations from waveguide (4280) to blade (4260) even when articulation section (4230) is in an articulated state as shown in FIG. 69B.

[000275] However, the flexible locking feature (4600) and the narrowed section (4267) are

limited in articulation due to the geometry of retention collars (4500) and flexible locking element (4600). As best illustrated in FIG 68, second angled contact surface (4525) of retention collar (4500) is dimensioned to allow a certain amount of clearance between articulation between rib (4605) of flexible locking member (4600) and retention collar (4500), thereby permitting articulation.

[000276] As best shown in FIG. 69A-B, first angled contact surface (4501) of one retention collar (4500) is dimensioned to abut against first angled contact surface (4501) of a second retention collar (4500), thereby providing a stop to limit articulation at a predetermined angle. As seen in FIG. 69A, angles X and Z are formed between first angled contact surfaces (4501) in an unarticulated position. While in this example, the angles X and Z are substantially similar, there is no requirement that the angles formed by first angled contact surfaces (4501) be identical. Alternatively, X could be twice the amount as Z, or X could be 0 degrees and Z could determine the entire articulation range. FIG. 69B shows articulation section (4230) in a maximum articulated state. First angled contact surfaces (4501) on one side of retention collars (4500) lock each other while the opposite side of first angled contact surfaces (4501) are further apart. Accordingly, the maximum articulation is limited to theta. In the present example, the maximum articulation angle is 30°.

[000277] Similar to articulation feature (130), articulation bands (4440, 4442) are laterally interposed within channels (4235B, 4235C) between retention collars (4500) and intermediate body portions (4700). Retention collars (4500) are configured to keep articulation bands (4440, 4442) in a parallel relationship with each other, particularly when articulation section (4330) is in a bent configuration (e.g., similar to the configuration shown in FIG. 69B). In other words, when articulation band (4440) is on the inner diameter of a curved configuration presented by a bent articulation section (4330), retention collars (4500) may retain articulation band (4440) such that articulation band (4440) follows a curved path that complements the curved path followed by articulation band (4442). It should be understood that channels (4235B, 4235C) are sized to accommodate respective articulation bands (4440, 4442) in such a way that articulation bands (4440, 4442) may still freely slide through articulation section (4330), even with

retention collars (4500) being secured to intermediate body portions (4700). It should also be understood that retention collars (4500) may be secured to body portions (4700, 4800, 4900) in various ways, including but not limited to interference fitting, adhesives, welding, etc.

[000278] VIII. Exemplary Distal Flange with Crush Ribs

[000279] In some instances it may be desirable for distal outer sheath (33, 4333) to be secured against distal flange (136, 4236) while maintaining minimal contact with distal flange (136, 4236). Minimal contact between distal outer sheath (33, 4333) and distal flange (136, 4236) may be desirable in order to limit the amount energy absorbed by outer sheath (33, 4333) in order to maintain a structurally secured connection between distal outer sheath (33, 4333) and distal flange (136, 4236). To that end, FIGS. 70-71 show an exemplary distal node bumper (4400) that may be used to secure distal outer sheath (33, 4333) to distal flange (136, 4236).

[000280] Distal node bumper (4400) of the present example is formed of an elastomeric material (e.g., silicone, etc.) and comprises a pair of flats (4420), a slot (4405), an outer surface (4415), crush ribs (4410) longitudinally disposed on surface (4415), and a face (4425). Flats (4420) complement flats of distal flange (136), thereby ensuring a secure connection between distal node (136) and distal node bumper (4400). Slot (4405) allows space for cable (174) to pass through distal node bumper (4400). Crush ribs (4410) are resilient, but compress within distal outer sheath (33) in order to provide a secure connection between distal flange (136) and distal outer sheath (33). Crush ribs (4410) also provide limited contact between distal flange (136) and distal outer sheath (33), thereby transferring minimal ultrasonic vibration energy to distal outer sheath (33), helping maintain a structurally secured connection between distal outer sheath (33) and distal flange (136).

[000281] IX. Waveguide with Keyhole Cross Sectional Profile

[000282] In some instances, articulation of waveguide (180, 4280) might lead to varied location of interaction between clamp pad (46, 4346) and blade (60, 4260) about the

longitudinal axis when clamp pad (46, 4346) is in a closed position. For instance, when the articulation section (130, 4230) is in a non-articulated state, and clamp pad (46, 4346) is pivoted toward and away from blade (60, 4260), clamp pad (46, 4346) may traverse a vertically oriented path that is on-plane with a vertical plane that laterally bisects blade (60, 4260).

[000283] In some instances when the articulation section (130, 4320) is in an articulated state, and clamp pad (46, 4346) is pivoted toward and away from blade (60, 4260), clamp pad (46, 4346) may traverse an obliquely oriented path that is off-plane with a vertical plane that laterally bisects blade (60, 4260). In other words, the path that is traversed by clamp pad (46, 4346) may be obliquely oriented relative to a vertical plane that laterally bisects blade (60, 4260). This may be caused by a tolerance stack in the shaft assembly (30, 4300) and/or due to other factors. If this occurs to a blade that has a radius that varies along the surface range at which clamp pad (46, 4346) may compress tissue, such off-plane closure of clamp pad (34, 4346) may result in a compression force profile on the tissue that differs from the compression force profile that would be encountered by the tissue when clamp pad (46, 4346) is closed on-plane with articulation section (130, 4230) in a non-articulated state. In other words, the compression force profile on the tissue may vary based on whether articulation section (130, 4230) in an articulated state or a non-articulated state. For instance, such variation may lead to different times required to cut and/or seal tissue (e.g., by denaturing proteins in tissue cells). This inconsistency may cause an operator to expose blade (60, 4260) to direct contact with clamp pad (46, 4346) for a longer amount of time than desired. Direct contact between blade (60, 4260) and clamp pad (46, 4346) could lead to higher operating temperatures, possibly leading to deformation of blade (60, 4260) and/or clamp pad (46, 4346). It may therefore be desirable to prevent such variance in the compression force profile, thereby providing an end effector that provides a more consistent and predictable performance.

[000284] One method of providing uniform times for cutting and/or sealing is to use a blade (5000) with a keyhole cross sectional area, as shown in FIGS. 72-74. Blade (1000) of this example comprises a clamping surface (5003), an elongated surface (5002), and a back-cutting surface (5001). Clamping surface is substantially circular in shape, with a

constant radius of curvature, and with a circumference large enough to prevent clamp pad (46) from clamping tissue on any other surface of blade (5000). By way of example only, the constant radius of curvature may extend for at least 180° of the cross-sectional area of blade (5000), or more particularly for at least 270° of the cross-sectional area of blade (5000), or more particularly for at least 320° of the cross-sectional area of blade (5000). Since clamping surface is substantially circular in shape, the tissue (6000) surface area exposed to blade (5000) is uniform regardless of articulation location, and regardless of whether clamp pad (46) is on-plane or off-plane with blade (5000) during closure. Elongated surface (5002) is relatively thin compared to clamping surface (5003). Elongated surface (5002) also extends from the bottom of clamping surface (5003). The shape and location of elongated surface (5002) ensures elongated surface (5002) will not come into contact with tissue (6000) clamped between clamp pad (46) and blade (5000). Back-cutting surface (5001) is located furthest away from clamp pad (46). Back-cutting surface (5001) is operable to cut and/or seal tissue (e.g., by denaturing proteins in tissue cells) without clamping tissue beforehand. It should also be understood that back-cutting surface (5001) may be used to perform back-cutting on tissue.

[000285] X. Exemplary Combinations

[000286] The following examples relate to various non-exhaustive ways in which the teachings herein may be combined or applied. It should be understood that the following examples are not intended to restrict the coverage of any claims that may be presented at any time in this application or in subsequent filings of this application. No disclaimer is intended. The following examples are being provided for nothing more than merely illustrative purposes. It is contemplated that the various teachings herein may be arranged and applied in numerous other ways. It is also contemplated that some variations may omit certain features referred to in the below examples. Therefore, none of the aspects or features referred to below should be deemed critical unless otherwise explicitly indicated as such at a later date by the inventors or by a successor in interest to the inventors. If any claims are presented in this application or in subsequent filings related to this application that include additional features beyond those referred to below, those additional features shall not be presumed to have been added for any reason relating

to patentability.

[000287] Example 1

[000288] An apparatus for operating on tissue, the apparatus comprising: (a) a body assembly; (b) a shaft extending distally from the body assembly, wherein the shaft defines a longitudinal axis; (c) an acoustic waveguide, wherein the waveguide comprises a flexible portion; (d) an articulation section coupled with the shaft, wherein a portion of the articulation section encompasses the flexible portion of the waveguide, wherein the articulation section further comprises: (i) a first member, and (ii) a second member, wherein the second member is longitudinally translatable relative to the first member; (e) an end effector comprising: (i) an ultrasonic blade in acoustic communication with the waveguide, and (ii) a clamp arm, wherein the clamp arm is coupled with the first member and the second member; and (f) an articulation drive assembly operable to drive articulation of the articulation section to thereby deflect the end effector from the longitudinal axis.

[000289] Example 2

[000290] The apparatus of Example 1 or any of the following Examples, wherein the articulation section includes a collar, wherein an upper portion of the collar is defined by the first member, wherein a lower portion of the collar is defined by the second member.

[000291] Example 3

[000292] The apparatus of any of the preceding or following Examples, further comprising at least one translatable member secured to the first member.

[000293] Example 4

[000294] The apparatus of Example 3, wherein the at least one translatable member is operable to translate to thereby drive articulation of the articulation section.

[000295] Example 5

[000296] The apparatus of Example 3, wherein the at least one translatable member comprises a band.

[000297] Example 6

[000298] The apparatus of any of the preceding or following Examples, further comprising at least one translatable member secured to the second member.

[000299] Example 7

[000300] The apparatus of Example 6, wherein the at least one translatable member is operable to translate to thereby drive the clamp arm toward and away from the ultrasonic blade

[000301] Example 8

[000302] The apparatus of Example 6, wherein the at least one translatable member comprises a drive cable.

[000303] Example 9

[000304] The apparatus of any of the preceding or following Examples, wherein the articulation section further comprises an outer tube engaged with the first member

[000305] Example 10

[000306] The apparatus of any of the preceding or following Examples, wherein the articulation section comprises a set of ribs separated by gaps configured to promote flexing of the articulation section.

[000307] Example 11

[000308] The apparatus of any of the preceding or following Examples, wherein the articulation drive assembly comprises a pair of translating members, wherein the translating members are operable to translate simultaneously in opposite directions to thereby deflect the end effector from the longitudinal axis.

[000309] Example 12

[000310] The apparatus Example 11, wherein the translating members are further operable to translate simultaneously in the same direction to thereby drive the clamp arm toward and away from the ultrasonic blade.

[000311] Example 13

[000312] The apparatus of Example 11, wherein the waveguide includes at least one flange defining a pair of flats, wherein the translating members are positioned at respective flats of the pair of flats.

[000313] Example 14

[000314] The apparatus of any of the preceding or following Examples, wherein the articulation drive assembly comprises at least one rotating member, wherein the rotating member is configured to rotate to thereby cause articulation of the articulation section.

[000315] Example 15

[000316] The apparatus of Example 14, wherein the articulation drive assembly further comprises a first translating articulation driver and a second translating articulation driver, wherein the first and second translating articulation drivers are translatable to cause articulation of the articulation section, wherein the first translating articulation driver and the second translating articulation driver are coupled with the at least one rotating member.

[000317] Example 16

[000318] The apparatus of Example 15, wherein the rotating member is rotatable in a single direction to thereby cause translation of the first translating articulation driver in a first direction and simultaneous translation of the second translating articulation driver in a second direction.

[000319] Example 17

[000320] The apparatus of Example 14, wherein the articulation drive assembly further comprises a locking assembly configured to selectively lock a rotational position of the rotating member.

[000321] Example 18

[000322] The apparatus of any of the preceding or following Examples, wherein the clamp arm engages the first member in a ball-and-socket configuration.

[000323] Example 19

[000324] An apparatus for operating on tissue, the apparatus comprising: (a) a body assembly; (b) a shaft extending distally from the body assembly, wherein the shaft defines a longitudinal axis; (c) an articulation section coupled with the shaft; (d) an end effector coupled with the articulation section, wherein the end effector comprises: (i) a working element configured to engage tissue, and (ii) a clamp arm operable to pivot toward and away from the working element; and (e) an articulation drive assembly operable to drive articulation of the articulation section to thereby deflect the end effector from the longitudinal axis, wherein the articulation drive assembly comprises: (i) a first translating driver, and (ii) a second translating driver, wherein the first and second translating drivers are operable to translate simultaneously in opposite directions to thereby deflect the end effector from the longitudinal axis, wherein the first and second translating drivers are operable to translate simultaneously in the same direction to thereby drive the clamp arm toward and away from the working element.

[000325] Example 20

[000326] An apparatus for operating on tissue, the apparatus comprising: (a) a body assembly; (b) a shaft extending distally from the body assembly, wherein the shaft defines a longitudinal axis; (c) an articulation section coupled with the shaft; (d) an end effector coupled with the articulation section, wherein the end effector comprises: (i) a working element configured to engage tissue, and (ii) a clamp arm operable to pivot toward and away from the working element; and (e) a first pair of translating members,

wherein the first pair of translating members is operable to actuate the articulation section to thereby deflect the end effector from the longitudinal axis; (f) a second pair of translating members, wherein the second pair of translating members is operable to drive the clamp arm toward and away from the working element; and (g) an idler configured to provide coordinated opposing longitudinal movement of the second pair of translating members in response to deflection of the end effector from the longitudinal axis.

[000327] Example 21

[000328] An apparatus comprising: (a) a body assembly; (b) a shaft extending distally from the body assembly, wherein the shaft defines a longitudinal axis; (c) an acoustic waveguide, wherein the waveguide comprises a flexible portion; (d) an articulation section coupled with the shaft, wherein a portion of the articulation section encompasses the flexible portion of the waveguide, wherein the articulation section further comprises: (i) a plurality of body portions aligned along the longitudinal axis, and (ii) a flexible locking member, wherein the flexible locking member is operable to secure the body portions in relation to each other and in relation to the shaft; (e) an end effector comprising an ultrasonic blade in acoustic communication with the waveguide; and (f) an articulation drive assembly operable to drive articulation of the articulation section to thereby deflect the end effector from the longitudinal axis.

[000329] Example 22

[000330] The apparatus of Example 21 or any of the following Examples, wherein the articulation section includes at least one collar disposed around at least one body portion of the plurality of body portions.

[000331] Example 23

[000332] The apparatus of Example 22, wherein the at least one collar further comprises an angled surface configured to mechanically stop the flexible locking member from articulation past a predetermined angle.

[000333] Example 24

[000334] The apparatus of Example 22, wherein the flexible locking member further comprises an insert, wherein the at least one collar further comprises a path configured to receive the insert.

[000335] Example 25

[000336] The apparatus of any of the preceding or following Examples, wherein the articulation drive assembly comprises at least one translatable member engaged with least one body portion of the plurality of body portions.

[000337] Example 26

[000338] The apparatus of Example 25, wherein the at least one translatable member is operable to translate to thereby drive articulation of the articulation section.

[000339] Example 27

[000340] The apparatus of Example 25, wherein the at least one translatable member comprises a first band.

[000341] Example 28

[000342] The apparatus of Example 27, wherein the band is slidably disposed within or along at least one body portion of the plurality of body portions.

[000343] Example 29

[000344] The apparatus of Example 28, wherein the band is fixed a distal-most body portion of the plurality of body portions.

[000345] Example 30

[000346] The apparatus of Example 27, wherein the at least one translatable member further comprises a second band.

[000347] Example 31

[000348] The apparatus of Example 30, wherein both bands are slidably disposed within or along at least one body portion of the plurality of body portions.

[000349] Example 32

[000350] The apparatus of Example 31, wherein the first band and the second band are fixed to opposite sides of a distal-most body portion of the plurality of body portions.

[000351] Example 33

[000352] The apparatus of Example 32, wherein the first band and the second band are operable to simultaneously translate in opposing longitudinal directions.

[000353] Example 34

[000354] The apparatus of any of the preceding or following Examples, wherein shaft comprises a distal outer sheath located along the longitudinal axis, wherein the distal outer sheath comprises a proximal end and a distal end, wherein the proximal end of the distal outer sheath is connected to both the flexible locking member and a distal-most body portion of the plurality of body portions.

[000355] Example 35

[000356] The apparatus of Example 34, wherein the shaft further comprises a proximal outer sheath having a proximal end connected to the body assembly and a distal end, wherein the distal end is of the proximal outer sheath is connected to both the flexible locking member and a proximal-most body portion of the plurality of body portions.

[000357] Example 36

[000358] The apparatus of Example 35, wherein the flexible locking member further comprises at least two sets of resilient legs with a tab at the end of each leg.

[000359] Example 37

[000360] The apparatus of Example 36, wherein one set of resilient legs with a tab at the

end of each leg is configured to connect the distal-most body portion of the plurality of body portions with the proximal end of the distal outer sheath.

[000361] Example 38

[000362] The apparatus of Example 36, wherein one set of resilient legs with a tab at the end of each leg is configured to connect the proximal-most body portion of the plurality of body portions with the distal end of the proximal outer sheath.

[000363] Example 39

[000364] An apparatus for operating on tissue, the apparatus comprising: (a) a body assembly; (b) a shaft extending distally from the body assembly, wherein the shaft defines a longitudinal axis; (c) an articulation section coupled with the shaft; (d) an end effector coupled with the articulation section, wherein the end effector comprises: (i) a working element configured to engage tissue, wherein the working element comprises keyhole cross sectional area, wherein the keyhole cross-sectional area is defined by: (A) a bottom cutting surface, and (B) a clamping surface having a constant radius of curvature, wherein the constant radius of curvature extends along at least 180° of an angular extent of the keyhole cross-sectional area, and (ii) a clamp arm operable to pivot toward and away from the clamping surface of the working element; and (e) an articulation drive assembly operable to drive articulation of the articulation section to thereby deflect the end effector from the longitudinal axis.

[000365] Example 40

[000366] An apparatus for operating on tissue, the apparatus comprising: (a) a body assembly; (b) a shaft extending distally from the body assembly, wherein the shaft defines a longitudinal axis, wherein the shaft includes a sheath; (c) an acoustic waveguide, wherein the waveguide comprises: (i) a proximal flange, (ii) a distal flange, and (iii) a flexible portion positioned between the proximal and distal flanges; (d) an articulation section coupled with the shaft, wherein a portion of the articulation section encompasses the flexible portion of the waveguide, wherein the articulation section

further comprises: (i) a plurality of body portions aligned along the longitudinal axis, and (ii) a flexible locking member coupling the body portions with the shaft; (e) a bumper interposed between the distal flange of the waveguide and the sheath, wherein the bumper includes a plurality of longitudinally extending crush ribs; (f) an end effector comprising an ultrasonic blade in acoustic communication with the waveguide; and (g) an articulation drive assembly operable to drive articulation of the articulation section to thereby deflect the end effector from the longitudinal axis.

[000367] XI. Miscellaneous

[000368] It should be understood that any of the versions of instruments described herein may include various other features in addition to or in lieu of those described above. By way of example only, any of the instruments described herein may also include one or more of the various features disclosed in any of the various references that are incorporated by reference herein. It should also be understood that the teachings herein may be readily applied to any of the instruments described in any of the other references cited herein, such that the teachings herein may be readily combined with the teachings of any of the references cited herein in numerous ways. Moreover, those of ordinary skill in the art will recognize that various teachings herein may be readily applied to electrosurgical instruments, stapling instruments, and other kinds of surgical instruments. Other types of instruments into which the teachings herein may be incorporated will be apparent to those of ordinary skill in the art.

[000369] It should be appreciated that any patent, publication, or other disclosure material, in whole or in part, that is said to be incorporated by reference herein is incorporated herein only to the extent that the incorporated material does not conflict with existing definitions, statements, or other disclosure material set forth in this disclosure. As such, and to the extent necessary, the disclosure as explicitly set forth herein supersedes any conflicting material incorporated herein by reference. Any material, or portion thereof, that is said to be incorporated by reference herein, but which conflicts with existing definitions, statements, or other disclosure material set forth herein will only be incorporated to the extent that no conflict arises between that incorporated material and

the existing disclosure material.

[000370] Versions of the devices described above may have application in conventional medical treatments and procedures conducted by a medical professional, as well as application in robotic-assisted medical treatments and procedures. By way of example only, various teachings herein may be readily incorporated into a robotic surgical system such as the DAVINCI™ system by Intuitive Surgical, Inc., of Sunnyvale, California. Similarly, those of ordinary skill in the art will recognize that various teachings herein may be readily combined with various teachings of U.S. Pat. No. 6,783,524, entitled "Robotic Surgical Tool with Ultrasound Cauterizing and Cutting Instrument," published August 31, 2004, the disclosure of which is incorporated by reference herein.

[000371] Versions described above may be designed to be disposed of after a single use, or they can be designed to be used multiple times. Versions may, in either or both cases, be reconditioned for reuse after at least one use. Reconditioning may include any combination of the steps of disassembly of the device, followed by cleaning or replacement of particular pieces, and subsequent reassembly. In particular, some versions of the device may be disassembled, and any number of the particular pieces or parts of the device may be selectively replaced or removed in any combination. Upon cleaning and/or replacement of particular parts, some versions of the device may be reassembled for subsequent use either at a reconditioning facility, or by a user immediately prior to a procedure. Those skilled in the art will appreciate that reconditioning of a device may utilize a variety of techniques for disassembly, cleaning/replacement, and reassembly. Use of such techniques, and the resulting reconditioned device, are all within the scope of the present application.

[000372] By way of example only, versions described herein may be sterilized before and/or after a procedure. In one sterilization technique, the device is placed in a closed and sealed container, such as a plastic or TYVEK bag. The container and device may then be placed in a field of radiation that can penetrate the container, such as gamma radiation, x-rays, or high-energy electrons. The radiation may kill bacteria on the device and in the container. The sterilized device may then be stored in the sterile container for

later use. A device may also be sterilized using any other technique known in the art, including but not limited to beta or gamma radiation, ethylene oxide, or steam.

[000373] Having shown and described various embodiments of the present invention, further adaptations of the methods and systems described herein may be accomplished by appropriate modifications by one of ordinary skill in the art without departing from the scope of the present invention. Several of such potential modifications have been mentioned, and others will be apparent to those skilled in the art. For instance, the examples, embodiments, geometrics, materials, dimensions, ratios, steps, and the like discussed above are illustrative and are not required. Accordingly, the scope of the present invention should be considered in terms of the following claims and is understood not to be limited to the details of structure and operation shown and described in the specification and drawings.

I/We claim:

1. An apparatus for operating on tissue, the apparatus comprising:
   (a) a body assembly;
   (b) a shaft extending distally from the body assembly, wherein the shaft defines a longitudinal axis;
   (c) an acoustic waveguide, wherein the waveguide comprises a flexible portion;
   (d) an articulation section coupled with the shaft, wherein a portion of the articulation section encompasses the flexible portion of the waveguide, wherein the articulation section further comprises:
      (i) a first member, and
      (ii) a second member, wherein the second member is longitudinally translatable relative to the first member;
   (e) an end effector comprising:
      (i) an ultrasonic blade in acoustic communication with the waveguide, and
      (ii) a clamp arm, wherein the clamp arm is coupled with the first member and the second member; and
   (f) an articulation drive assembly operable to drive articulation of the articulation section to thereby deflect the end effector from the longitudinal axis.

2. The apparatus of claim 1, wherein the articulation section includes a collar, wherein an upper portion of the collar is defined by the first member, wherein a lower portion of the collar is defined by the second member.

3. The apparatus of claim 1, further comprising at least one translatable member secured to the first member.

4. The apparatus of claim 3, wherein the at least one translatable member is operable to translate to thereby drive articulation of the articulation section.

5. The apparatus of claim 3, wherein the at least one translatable member comprises a band.

6. The apparatus of claim 1, further comprising at least one translatable member secured to the second member.

7. The apparatus of claim 6, wherein the at least one translatable member is operable to translate to thereby drive the clamp arm toward and away from the ultrasonic blade.

8. The apparatus of claim 6, wherein the at least one translatable member comprises a drive cable.

9. The apparatus of claim 1, wherein the articulation section further comprises an outer tube engaged with the first member.

10. The apparatus of claim 1, wherein the articulation section comprises a set of ribs separated by gaps configured to promote flexing of the articulation section.

11. The apparatus of claim 1, wherein the articulation drive assembly comprises a pair of translating members, wherein the translating members are operable to translate simultaneously in opposite directions to thereby deflect the end effector from the longitudinal axis.

12. The apparatus of claim 11, wherein the translating members are further operable to translate simultaneously in the same direction to thereby drive the clamp arm toward and away from the ultrasonic blade.

13. The apparatus of claim 11, wherein the waveguide includes at least one flange defining a pair of flats, wherein the translating members are positioned at respective flats of the pair of flats.

14. The apparatus of claim 1, wherein the articulation drive assembly comprises at least one rotating member, wherein the rotating member is configured to rotate to thereby cause articulation of the articulation section.

15. The apparatus of claim 14, wherein the articulation drive assembly further comprises a first translating articulation driver and a second translating articulation driver, wherein the first and second translating articulation drivers are translatable to cause articulation of the articulation section, wherein the first translating articulation driver and the second translating articulation driver are coupled with the at least one rotating member.

16. The apparatus of claim 15, wherein the rotating member is rotatable in a single direction to thereby cause translation of the first translating articulation driver in a first direction and simultaneous translation of the second translating articulation driver in a second direction.

17. The apparatus of claim 14, wherein the articulation drive assembly further comprises a locking assembly configured to selectively lock a rotational position of the rotating member.

18. The apparatus of claim 1, wherein the clamp arm engages the first member in a ball-and-socket configuration.

19. An apparatus for operating on tissue, the apparatus comprising:
    (a) a body assembly;
    (b) a shaft extending distally from the body assembly, wherein the shaft defines a longitudinal axis;
    (c) an articulation section coupled with the shaft;
    (d) an end effector coupled with the articulation section, wherein the end effector comprises:
        (i) a working element configured to engage tissue, and
        (ii) a clamp arm operable to pivot toward and away from the working

element; and

(e) an articulation drive assembly operable to drive articulation of the articulation section to thereby deflect the end effector from the longitudinal axis, wherein the articulation drive assembly comprises:

(i) a first translating driver, and

(ii) a second translating driver,

wherein the first and second translating drivers are operable to translate simultaneously in opposite directions to thereby deflect the end effector from the longitudinal axis,

wherein the first and second translating drivers are operable to translate simultaneously in the same direction to thereby drive the clamp arm toward and away from the working element.

20. An apparatus for operating on tissue, the apparatus comprising:

(a) a body assembly;

(b) a shaft extending distally from the body assembly, wherein the shaft defines a longitudinal axis;

(c) an articulation section coupled with the shaft;

(d) an end effector coupled with the articulation section, wherein the end effector comprises:

(i) a working element configured to engage tissue, and

(ii) a clamp arm operable to pivot toward and away from the working element; and

(e) a first pair of translating members, wherein the first pair of translating members is operable to actuate the articulation section to thereby deflect the end effector from the longitudinal axis;

(f) a second pair of translating members, wherein the second pair of translating members is operable to drive the clamp arm toward and away from the working element; and

(g) an idler configured to provide coordinated opposing longitudinal movement of the second pair of translating members in response to

deflection of the end effector from the longitudinal axis.

21. An apparatus comprising:

(a) a body assembly;

(b) a shaft extending distally from the body assembly, wherein the shaft defines a longitudinal axis;

(c) an acoustic waveguide, wherein the waveguide comprises a flexible portion;

(d) an articulation section coupled with the shaft, wherein a portion of the articulation section encompasses the flexible portion of the waveguide, wherein the articulation section further comprises:

(i) a plurality of body portions aligned along the longitudinal axis, and

(ii) a flexible locking member, wherein the flexible locking member is operable to secure the body portions in relation to each other and in relation to the shaft;

(e) an end effector comprising an ultrasonic blade in acoustic communication with the waveguide; and

(f) an articulation drive assembly operable to drive articulation of the articulation section to thereby deflect the end effector from the longitudinal axis.

22. The apparatus of claim 21, wherein the articulation section includes at least one collar disposed around at least one body portion of the plurality of body portions.

23. The apparatus of claim 22, wherein the at least one collar further comprises an angled surface configured to mechanically stop the flexible locking member from articulation past a predetermined angle.

24. The apparatus of claim 22, wherein the flexible locking member further comprises an insert, wherein the at least one collar further comprises a path configured to receive the insert.

25. The apparatus of claim 21, wherein the articulation drive assembly comprises at least one translatable member engaged with least one body portion of the plurality of body portions.

26. The apparatus of claim 25, wherein the at least one translatable member is operable to translate to thereby drive articulation of the articulation section.

27. The apparatus of claim 25, wherein the at least one translatable member comprises a first band.

28. The apparatus of claim 27, wherein the band is slidably disposed within or along at least one body portion of the plurality of body portions.

29. The apparatus of claim 28, wherein the band is fixed a distal-most body portion of the plurality of body portions.

30. The apparatus of claim 27, wherein the at least one translatable member further comprises a second band.

31. The apparatus of claim 30, wherein both bands are slidably disposed within or along at least one body portion of the plurality of body portions.

32. The apparatus of claim 31, wherein the first band and the second band are fixed to opposite sides of a distal-most body portion of the plurality of body portions.

33. The apparatus of claim 32, wherein the first band and the second band are operable to simultaneously translate in opposing longitudinal directions.

34. The apparatus of claim 31, wherein shaft comprises a distal outer sheath located along the longitudinal axis, wherein the distal outer sheath comprises a proximal end and a distal end, wherein the proximal end of the distal outer sheath is connected to both the flexible locking

member and a distal-most body portion of the plurality of body portions.

35. The apparatus of claim 34, wherein the shaft further comprises a proximal outer sheath having a proximal end connected to the body assembly and a distal end, wherein the distal end is of the proximal outer sheath is connected to both the flexible locking member and a proximal-most body portion of the plurality of body portions.

36. The apparatus of claim 35, wherein the flexible locking member further comprises at least two sets of resilient legs with a tab at the end of each leg.

37. The apparatus of claim 36, wherein one set of resilient legs with a tab at the end of each leg is configured to connect the distal-most body portion of the plurality of body portions with the proximal end of the distal outer sheath.

38. The apparatus of claim 36, wherein one set of resilient legs with a tab at the end of each leg is configured to connect the proximal-most body portion of the plurality of body portions with the distal end of the proximal outer sheath.

39. An apparatus for operating on tissue, the apparatus comprising:

(a) a body assembly;

(b) a shaft extending distally from the body assembly, wherein the shaft defines a longitudinal axis;

(c) an articulation section coupled with the shaft;

(d) an end effector coupled with the articulation section, wherein the end effector comprises:

(i) a working element configured to engage tissue, wherein the working element comprises keyhole cross sectional area, wherein the keyhole cross-sectional area is defined by:

(A) a bottom cutting surface, and

(B) a clamping surface having a constant radius of curvature, wherein the constant radius of curvature extends along at

least 180° of an angular extent of the keyhole cross-sectional area, and

(ii) a clamp arm operable to pivot toward and away from the clamping surface of the working element; and

(e) an articulation drive assembly operable to drive articulation of the articulation section to thereby deflect the end effector from the longitudinal axis.

40. An apparatus for operating on tissue, the apparatus comprising:

(a) a body assembly;

(b) a shaft extending distally from the body assembly, wherein the shaft defines a longitudinal axis, wherein the shaft includes a sheath;

(c) an acoustic waveguide, wherein the waveguide comprises:

(i) a proximal flange,

(ii) a distal flange, and

(iii) a flexible portion positioned between the proximal and distal flanges;

(d) an articulation section coupled with the shaft, wherein a portion of the articulation section encompasses the flexible portion of the waveguide, wherein the articulation section further comprises:

(i) a plurality of body portions aligned along the longitudinal axis, and

(ii) a flexible locking member coupling the body portions with the shaft;

(e) a bumper interposed between the distal flange of the waveguide and the sheath, wherein the bumper includes a plurality of longitudinally extending crush ribs;

(f) an end effector comprising an ultrasonic blade in acoustic communication with the waveguide; and

(g) an articulation drive assembly operable to drive articulation of the articulation section to thereby deflect the end effector from the longitudinal axis.

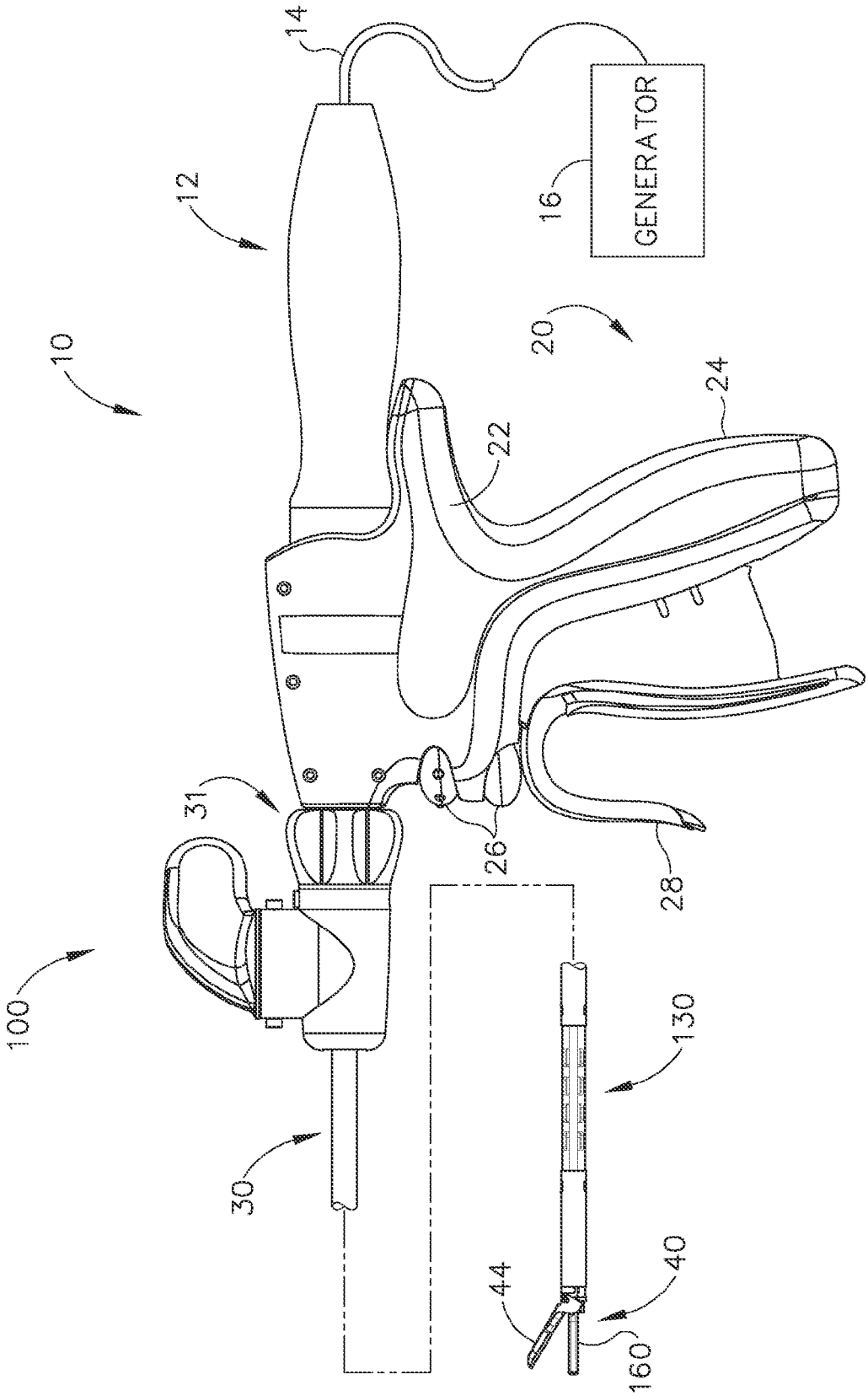

Fig. 1

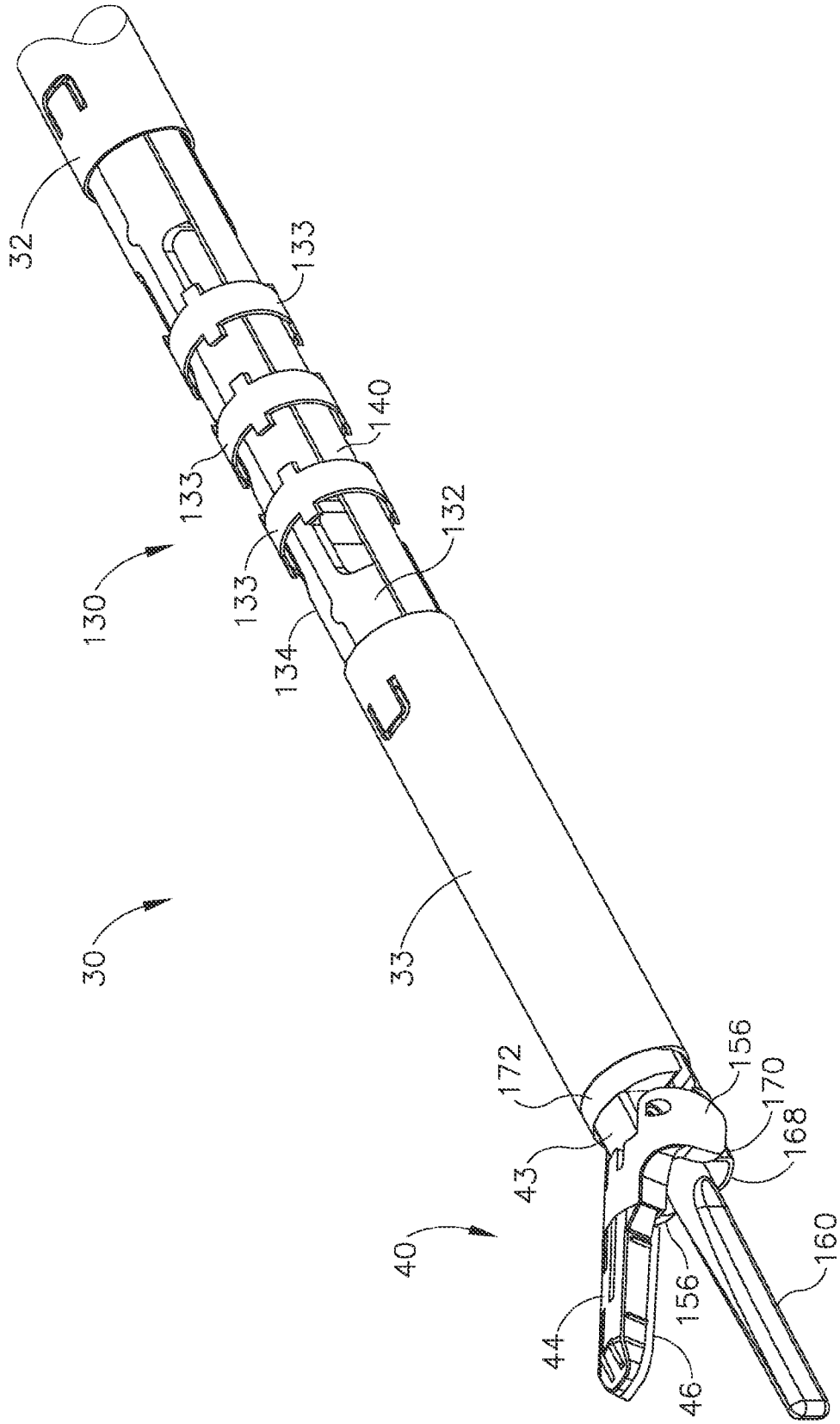
32
133
140
133
132
133
134
130
30
33
172
156
170
168
43
40
160
156
44
46

Fig.2

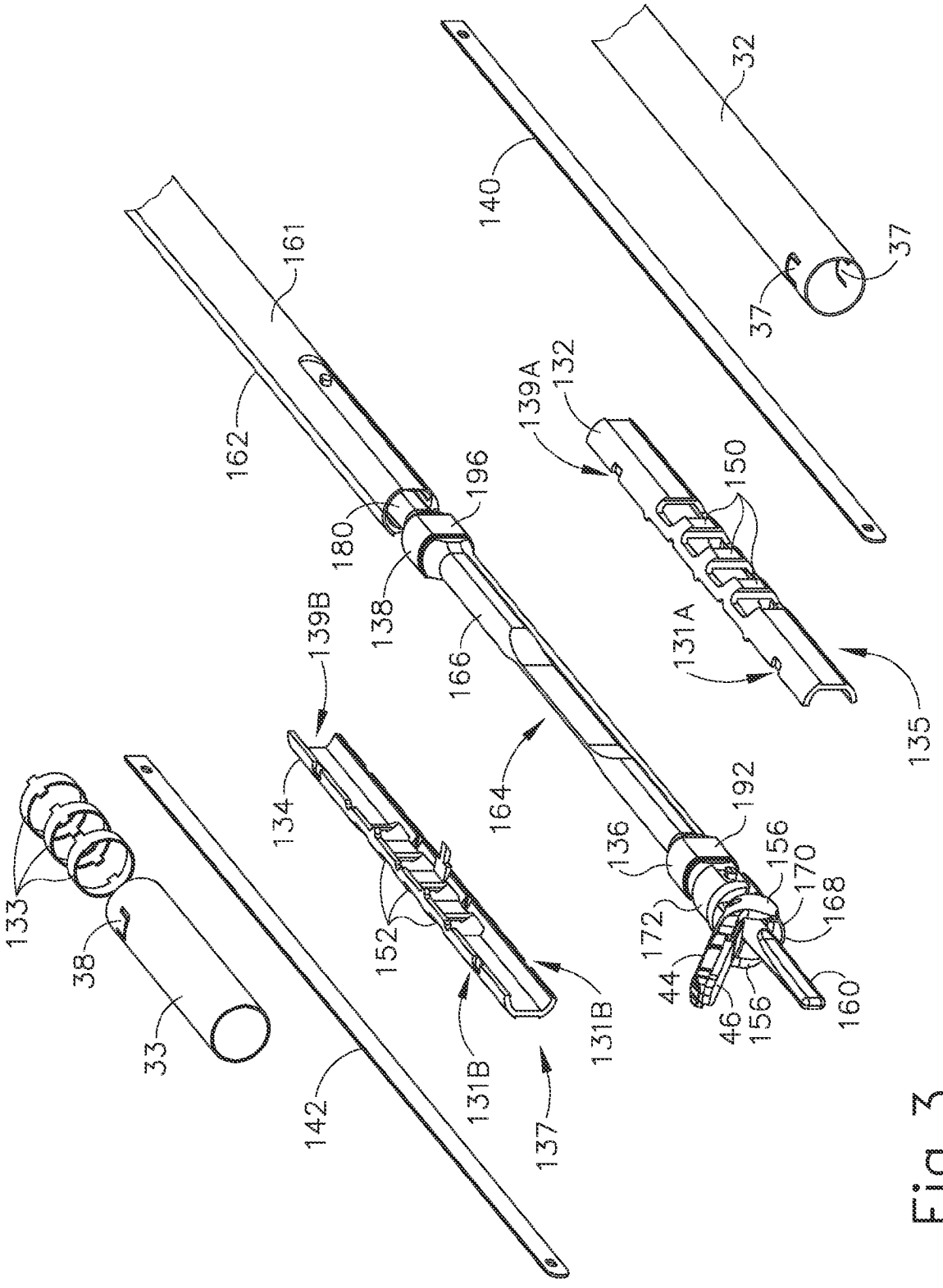
32
140
37
37
161
162
139A
132
150
196
180
138
139B
166
131A
135
164
134
192
136
156
170
168
172
44
46
156
160
152
131B
131B
137
142
133
38
33

Fig. 3

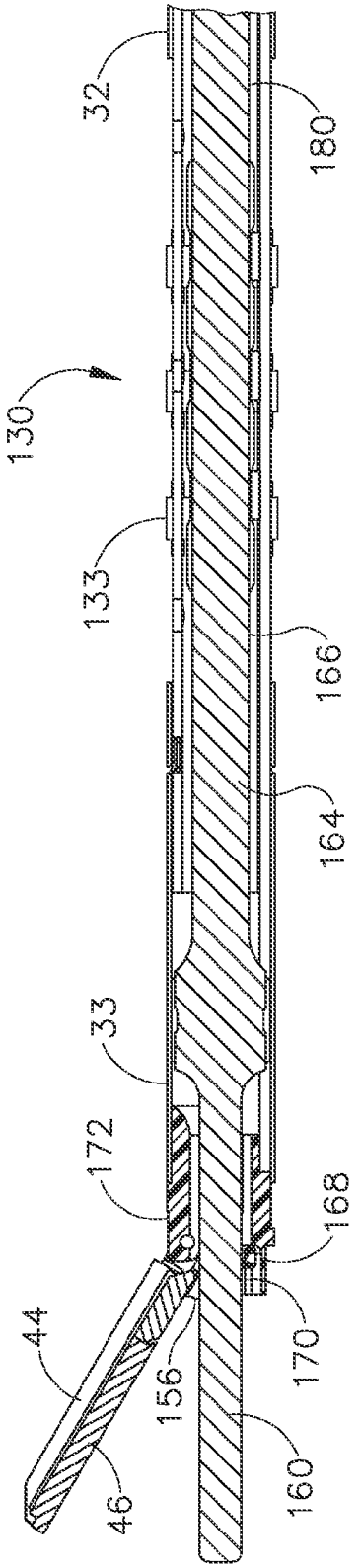

Fig. 4

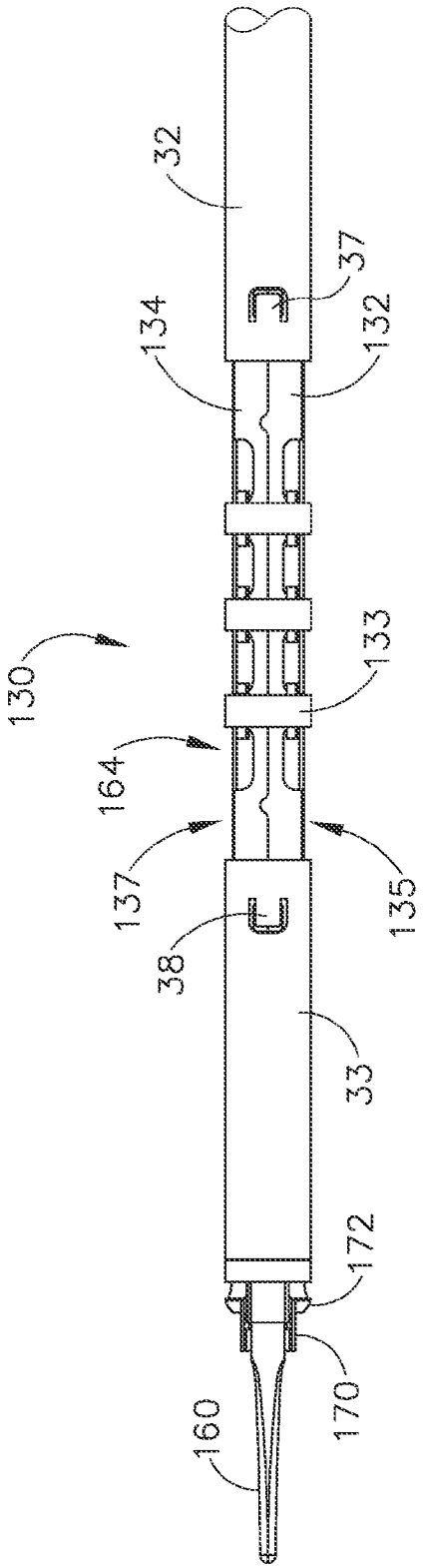

Fig.5

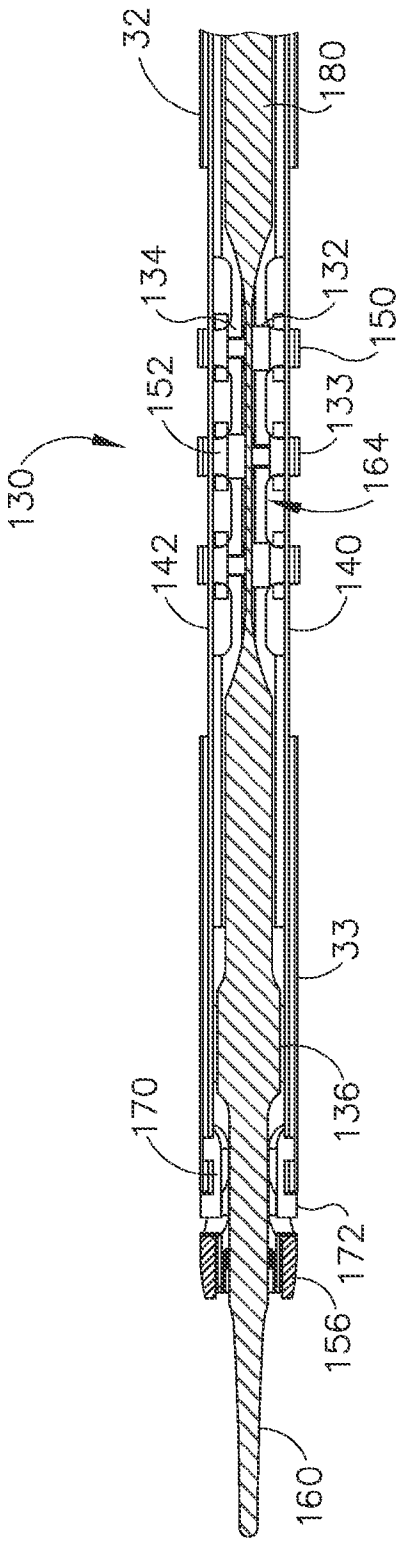

Fig.6A

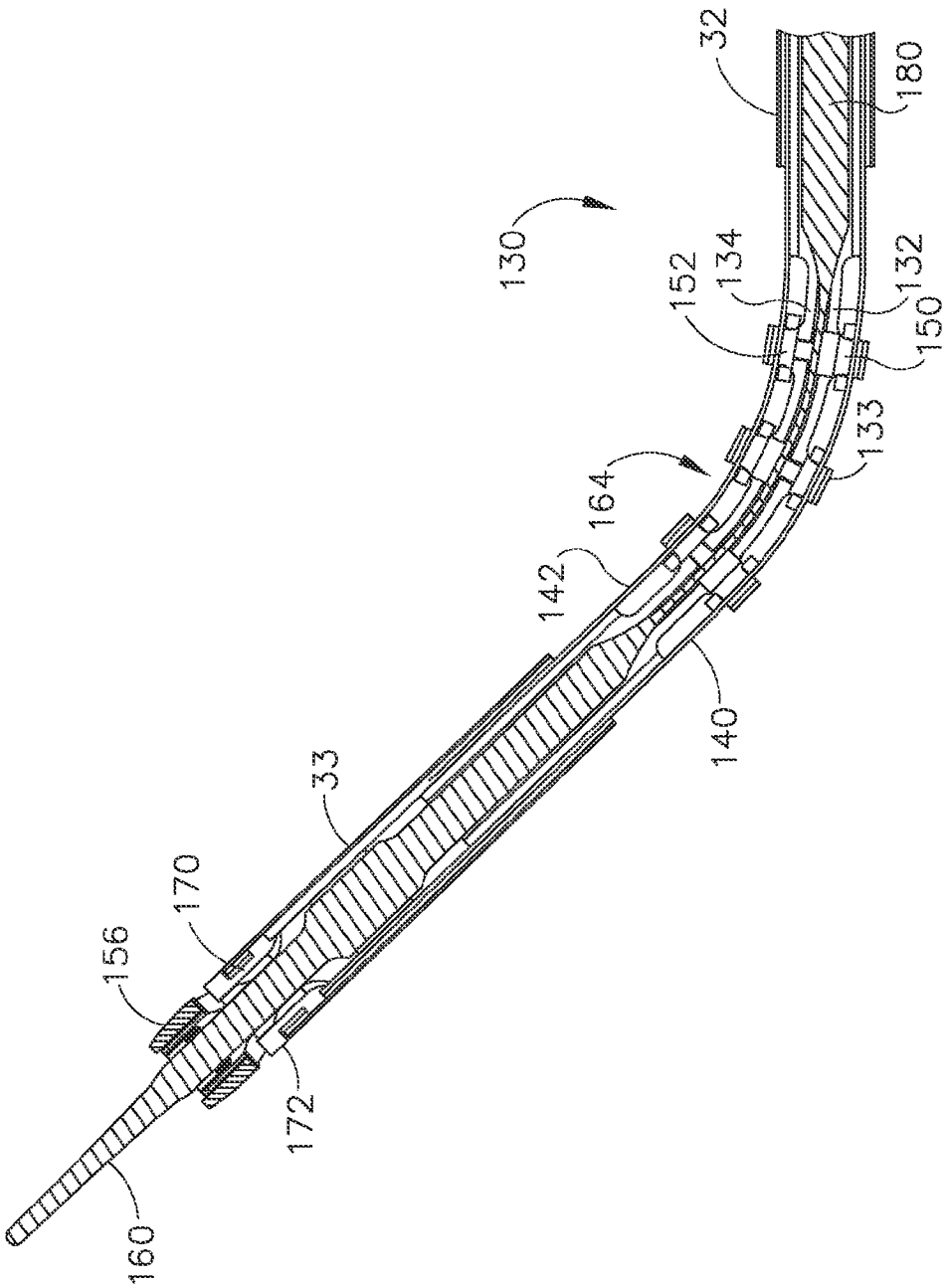

Fig.6B

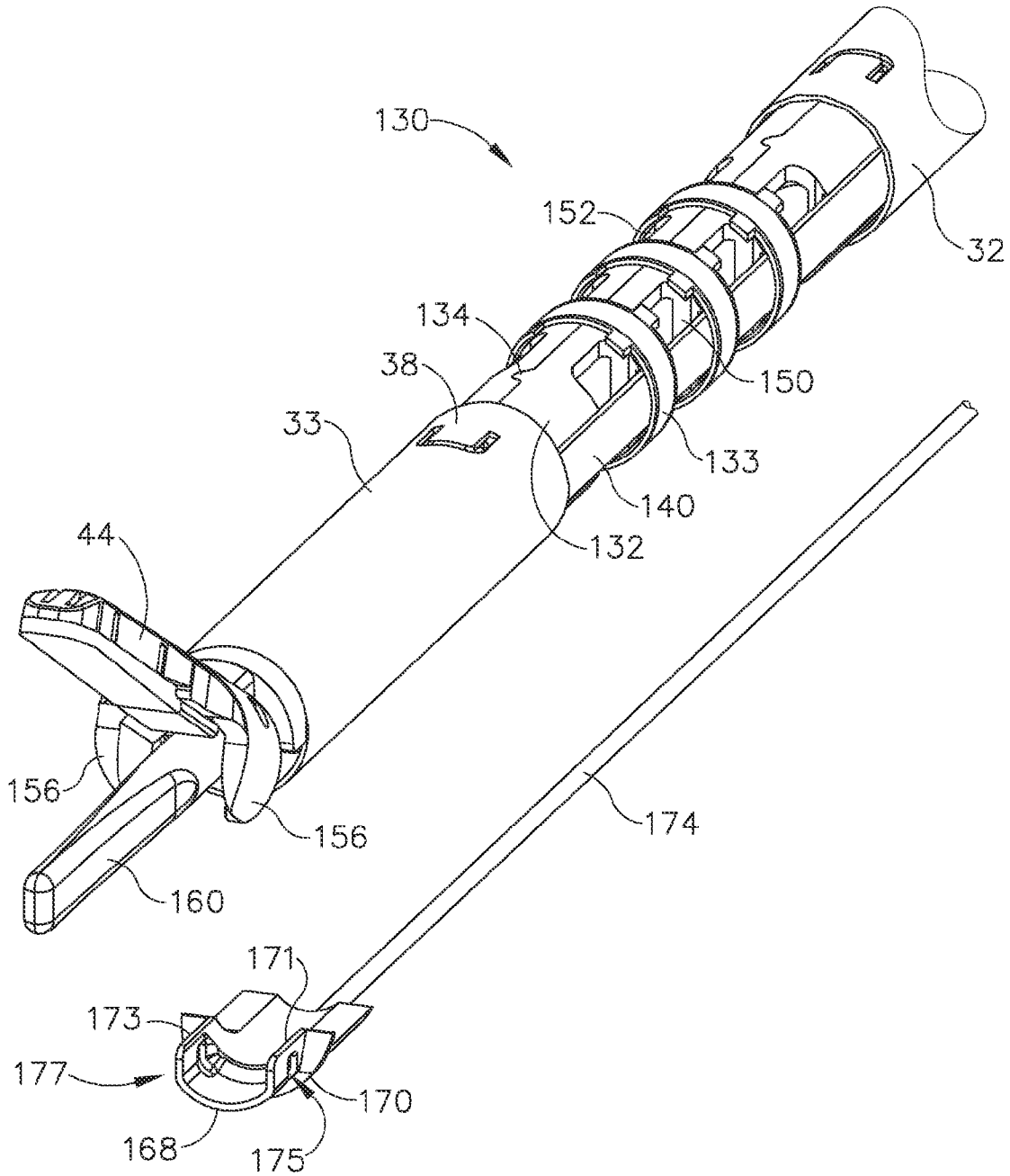
130
152
32
134
38
150
33
133
140
132
44
156
156
160
174
171
173
177
170
168
175

Fig.7

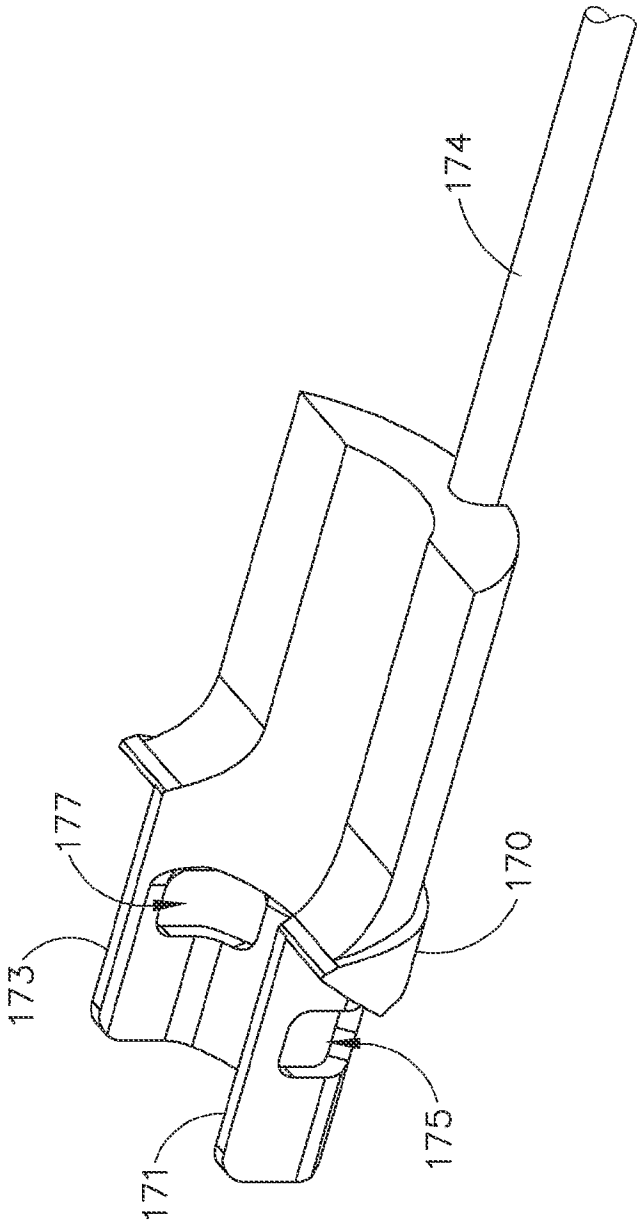

Fig.8

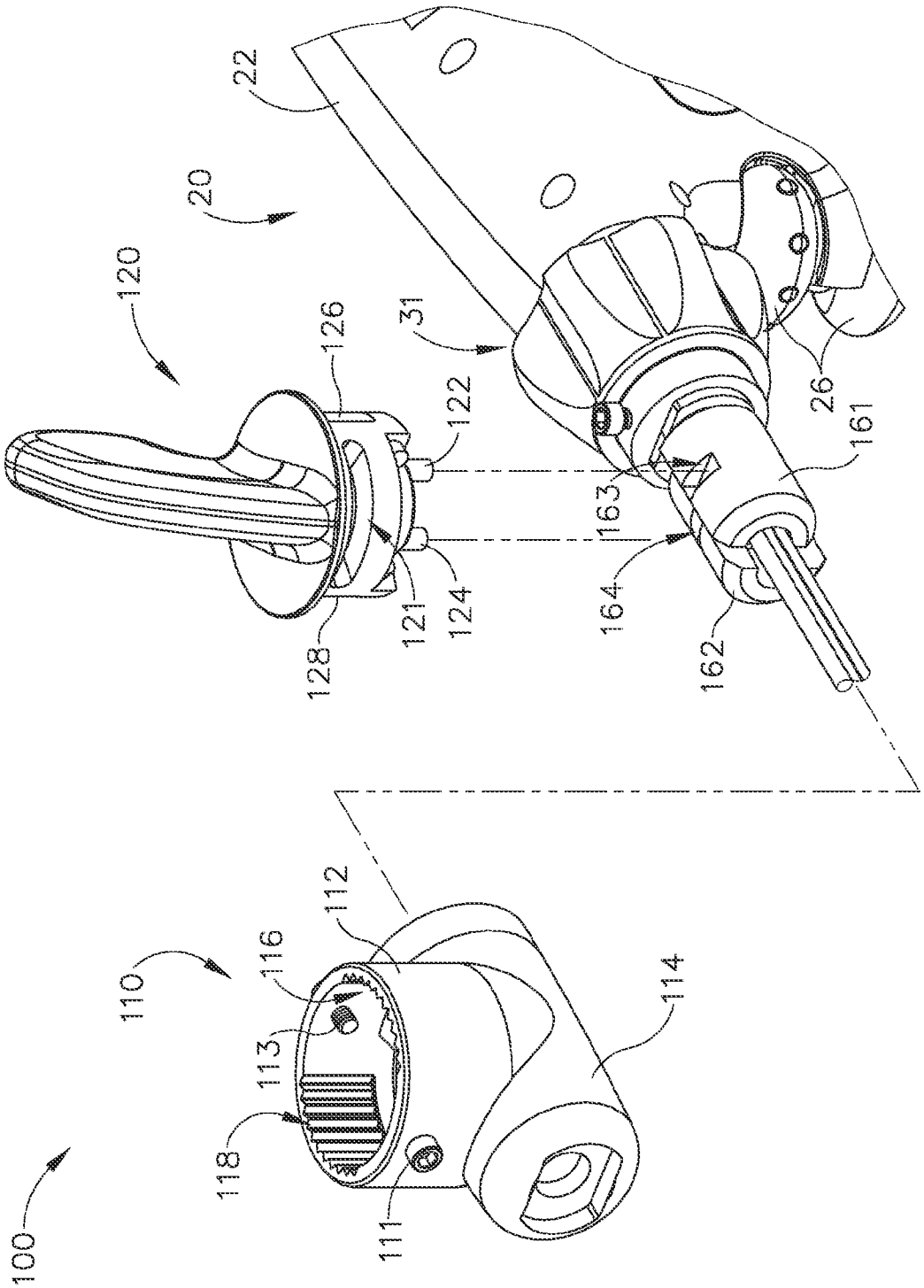
22
20
120
126
31
122
26
161
163
164
162
128
121
124
110
116
112
114
113
118
111
100

Fig.9

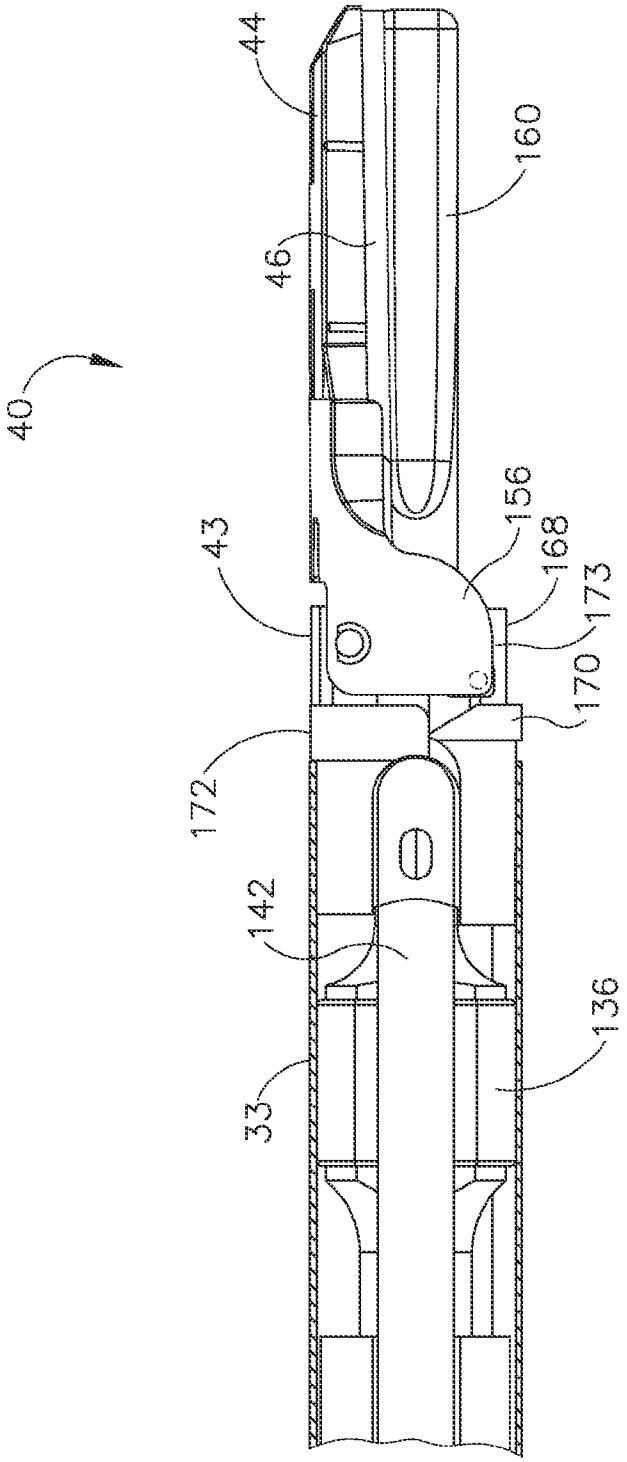

Fig. 10A

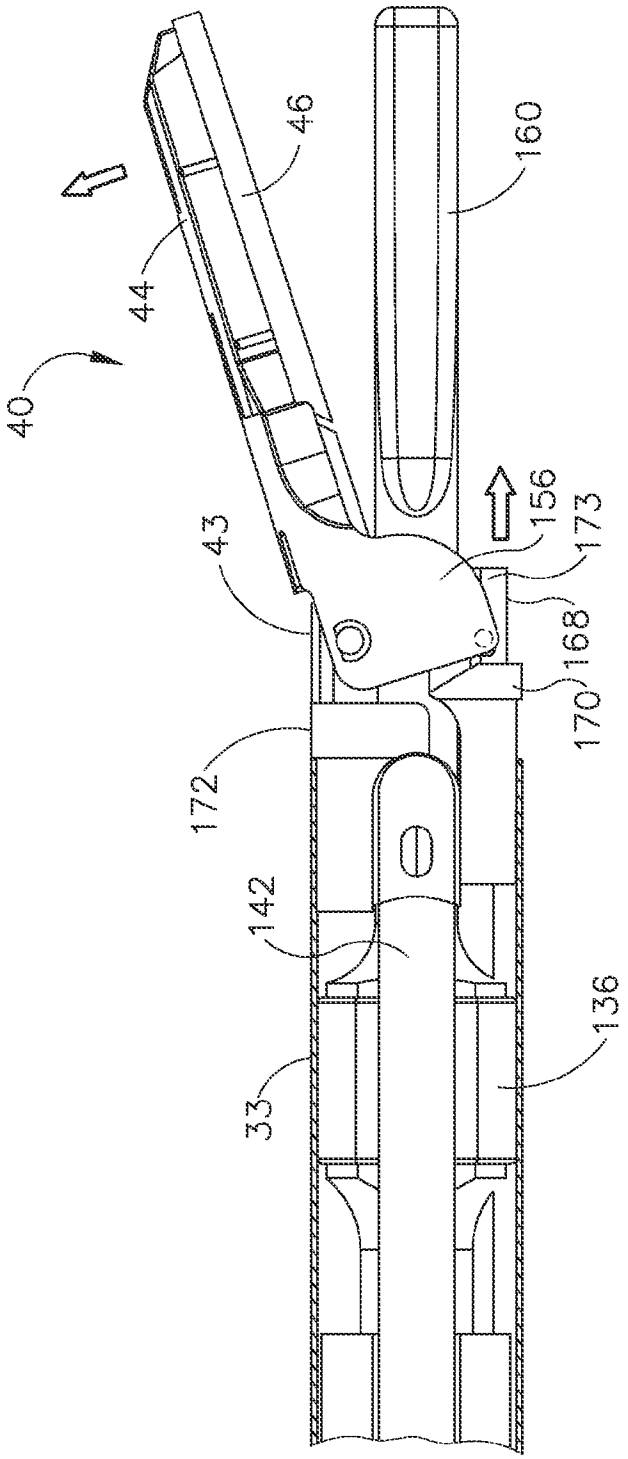

Fig. 10B

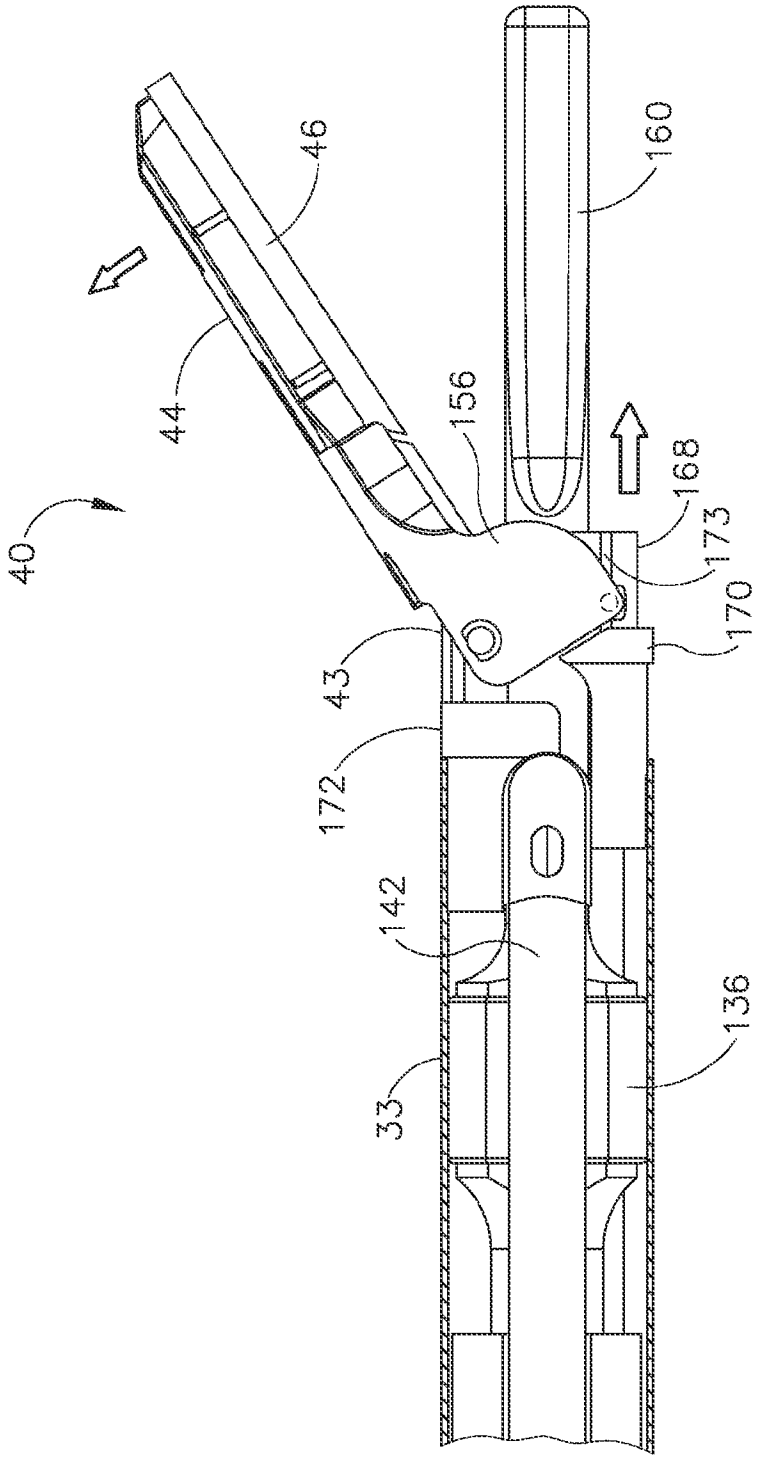

Fig.10C

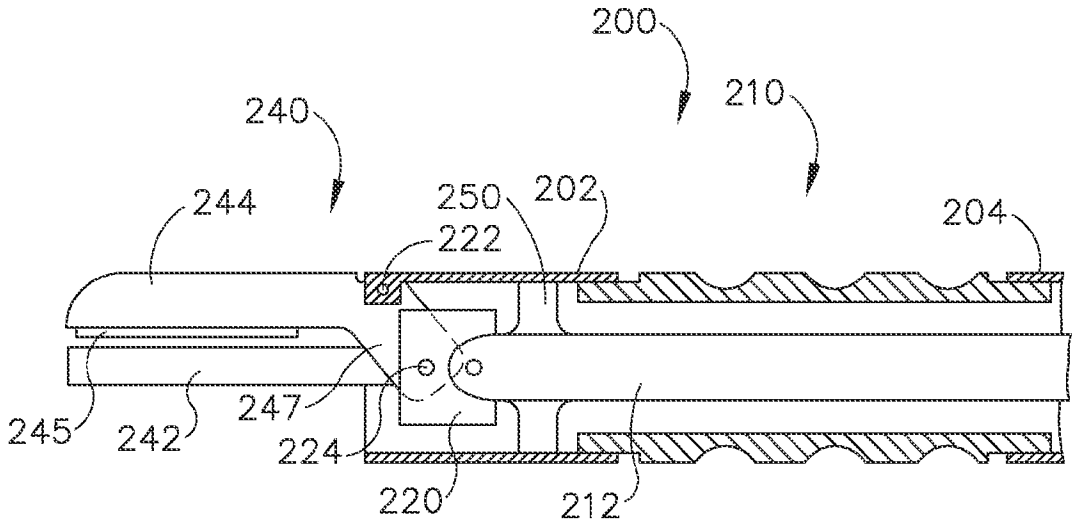

Fig.11A

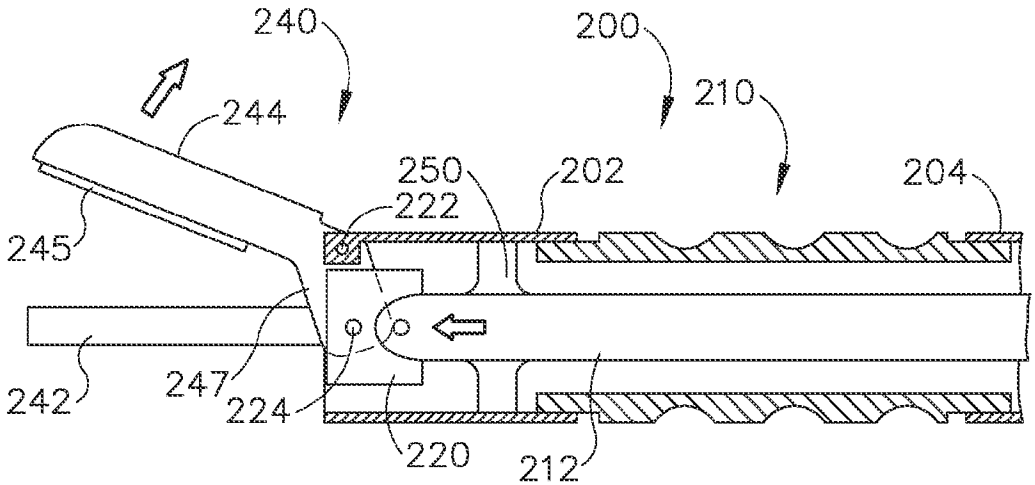

Fig.11B

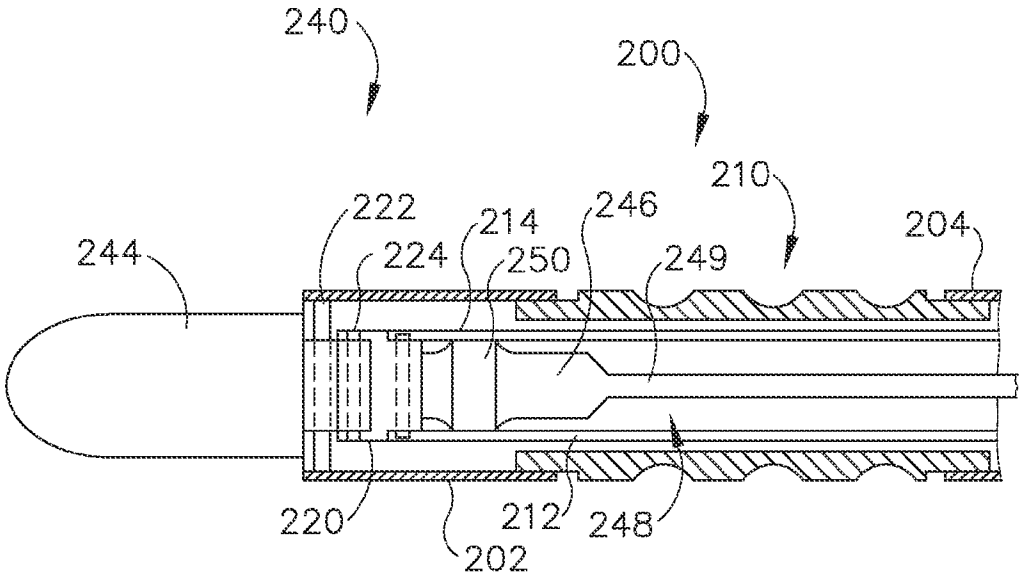

Fig.12A

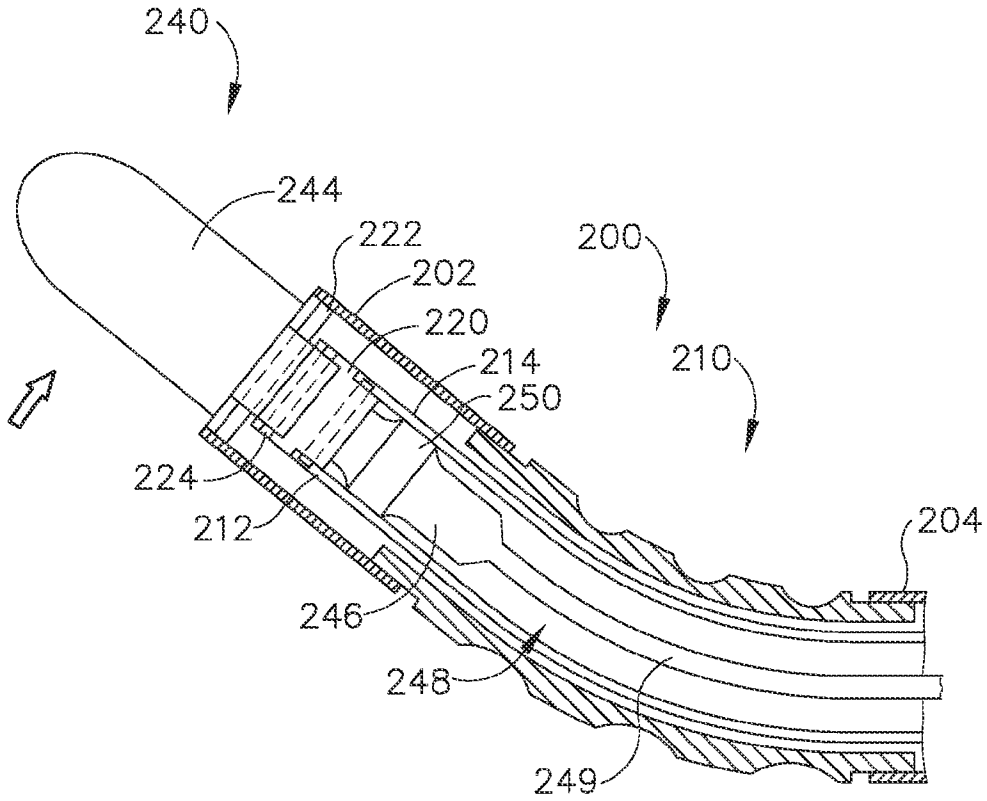

Fig.12B

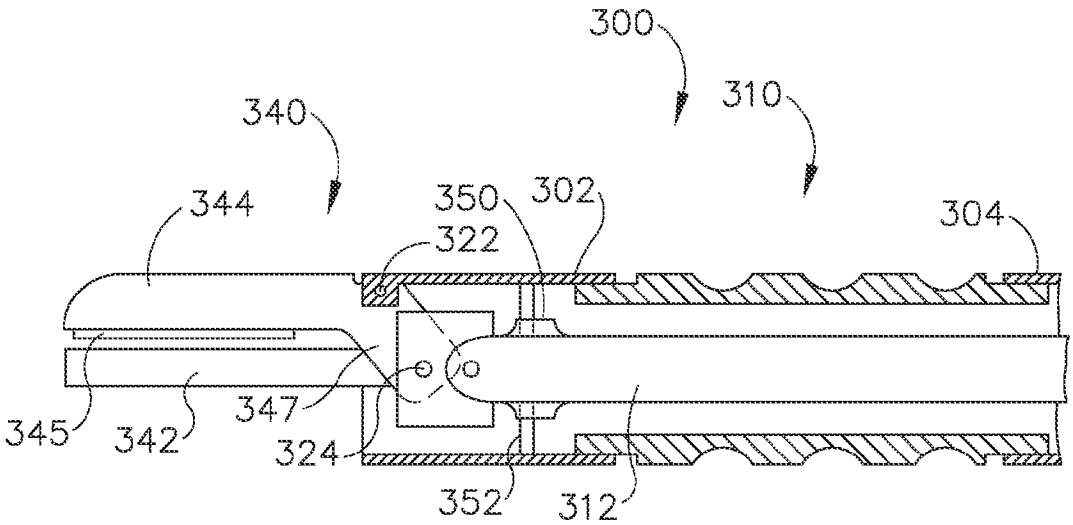

Fig.13A

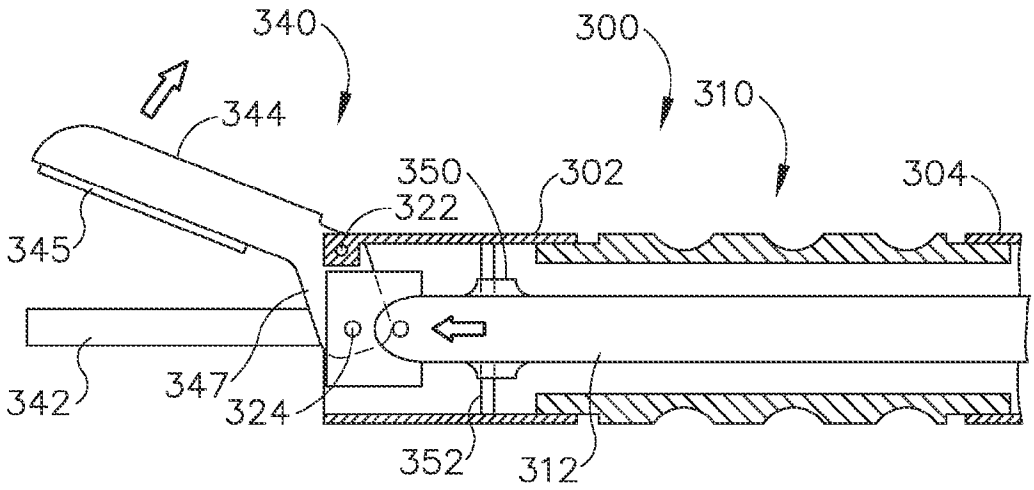

Fig.13B

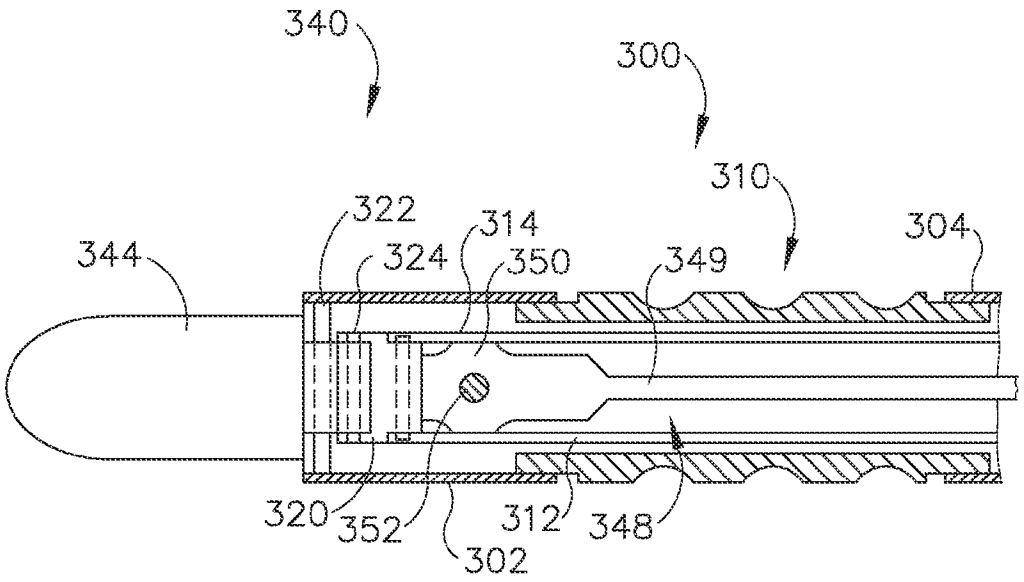

Fig. 14A

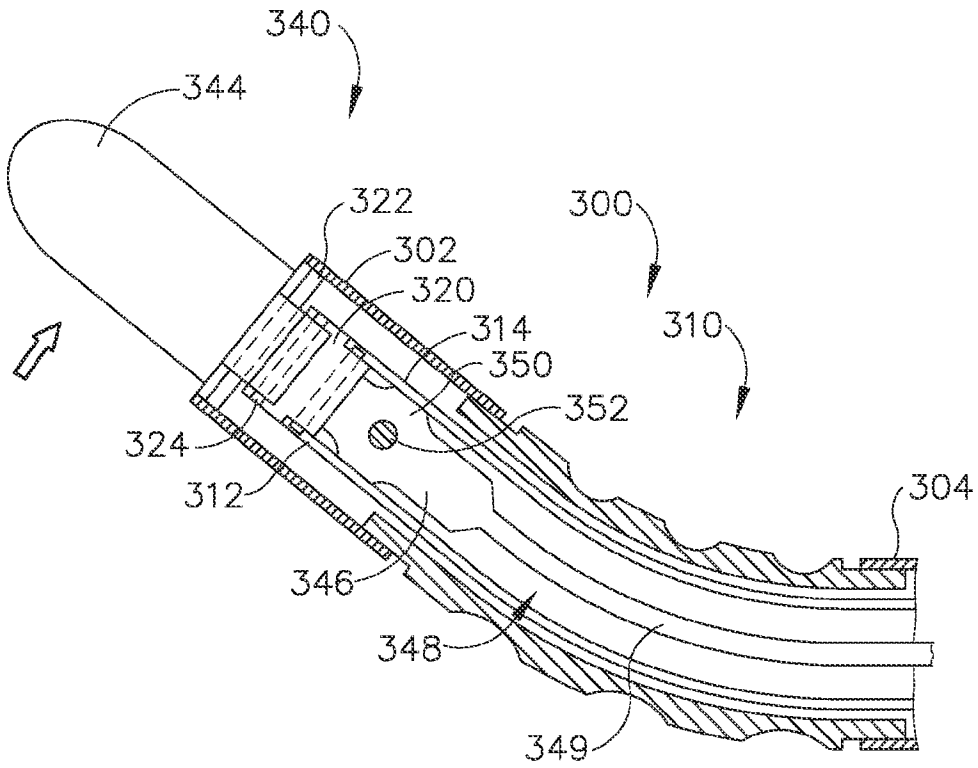

Fig. 14B

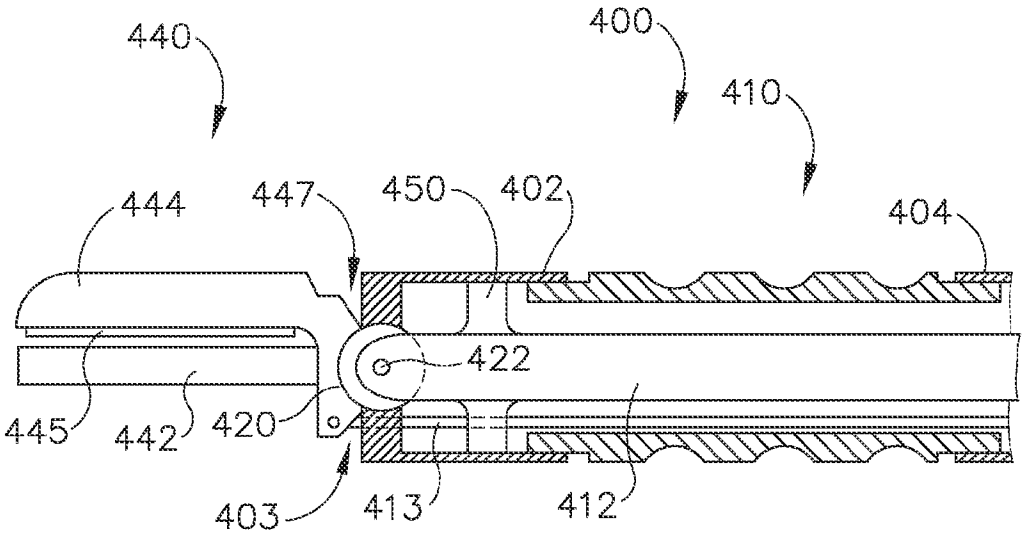

Fig.15A

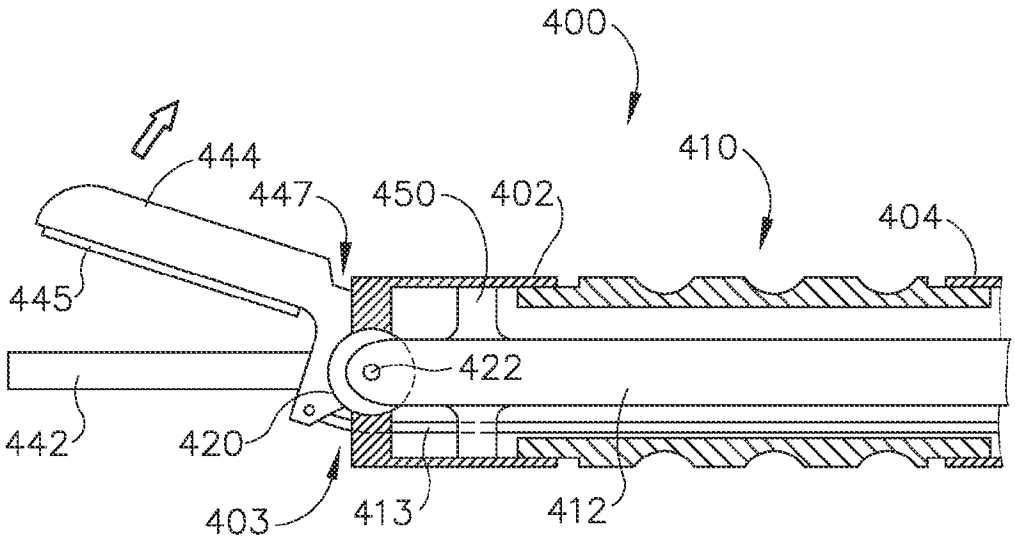

Fig.15B

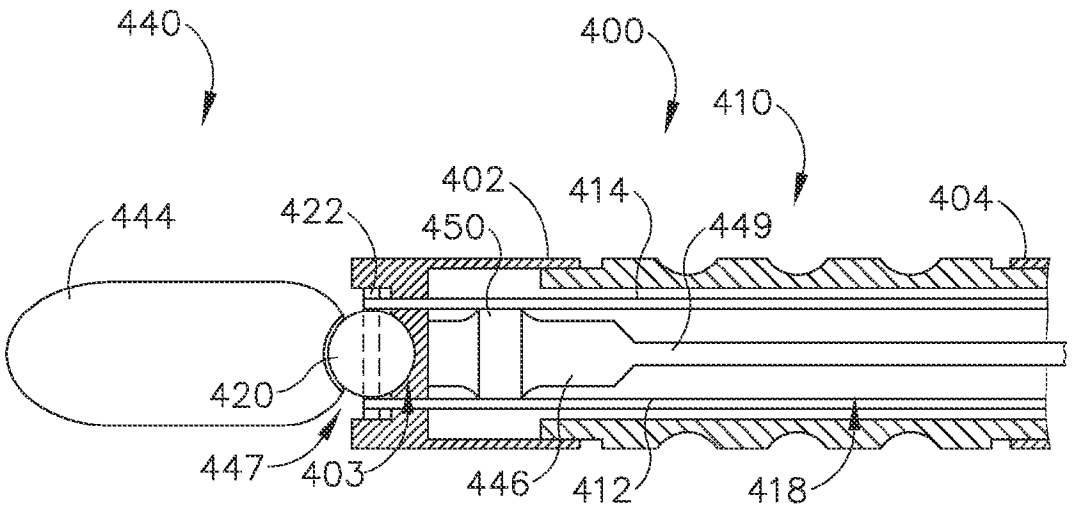

Fig.16A

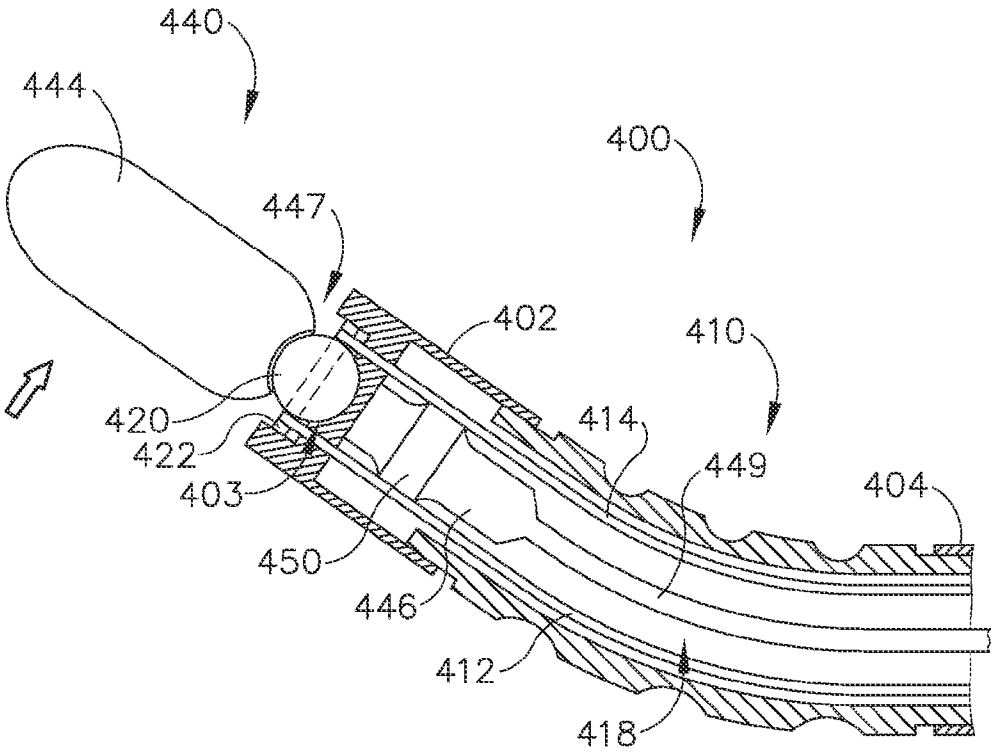

Fig.16B

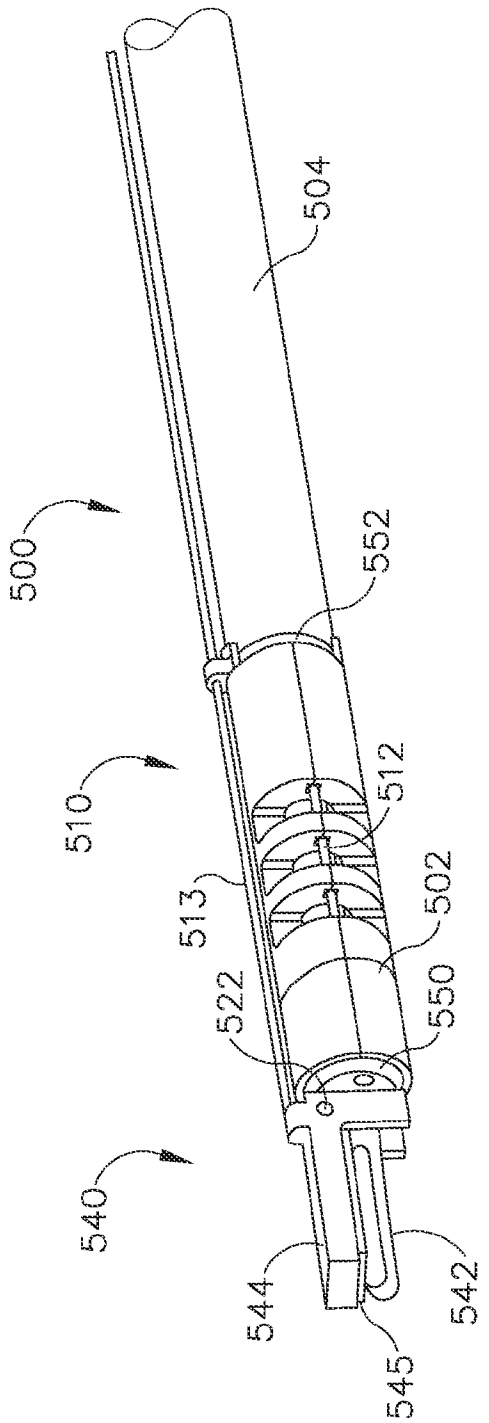

Fig. 17A

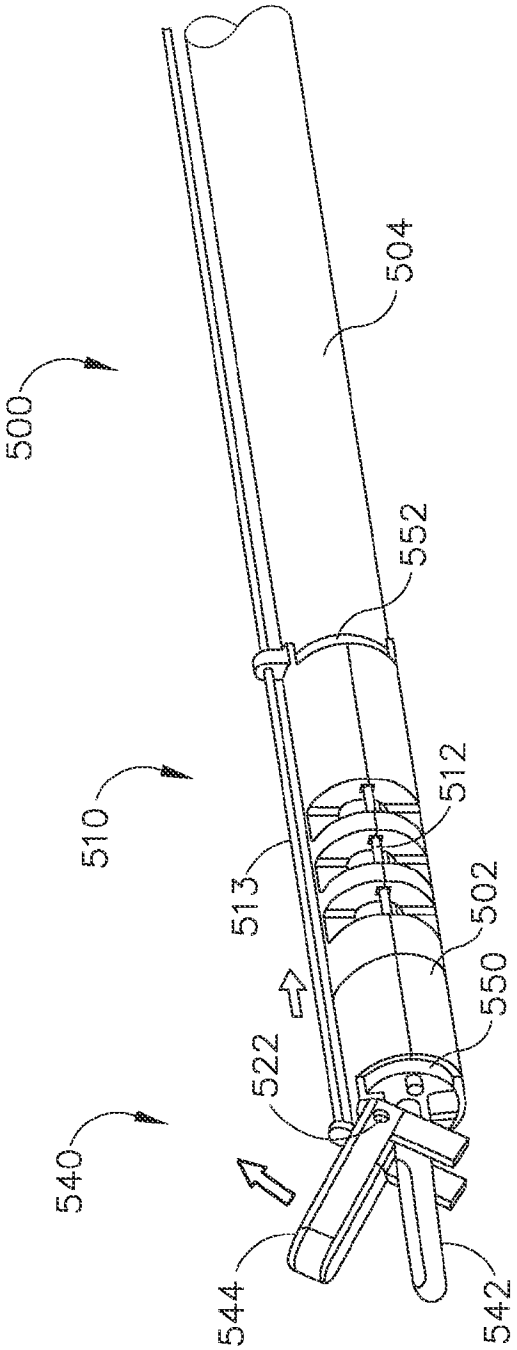

Fig. 17B

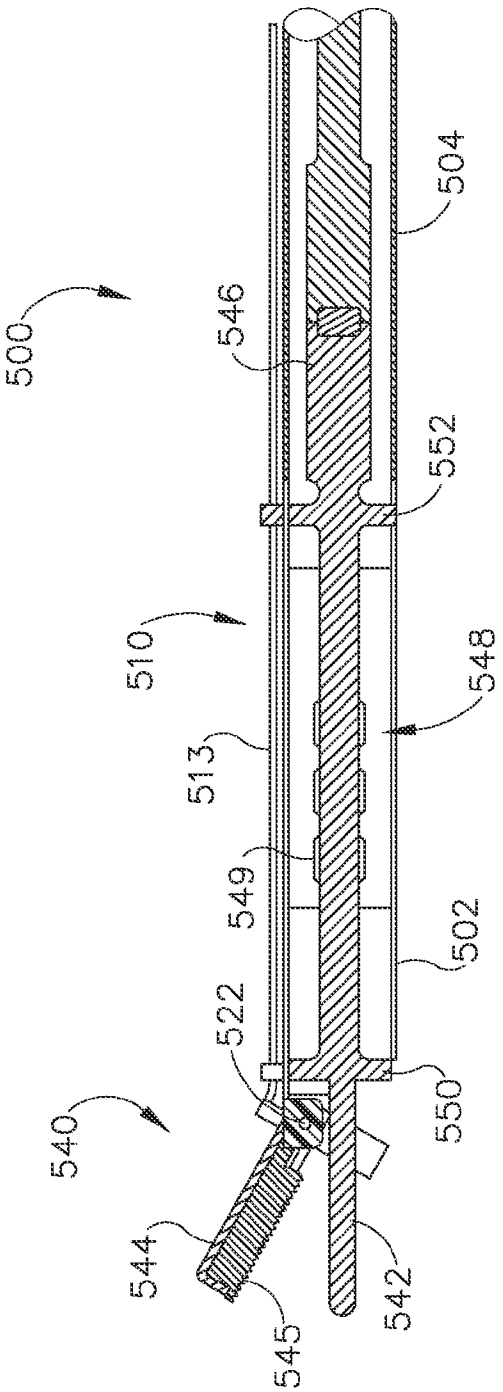

Fig. 18

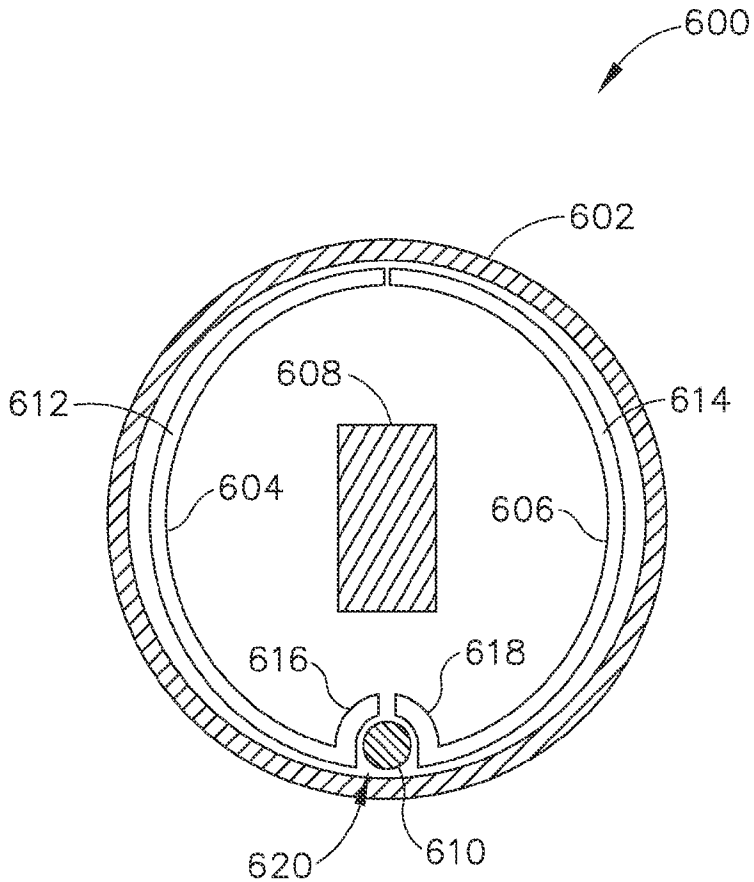

Fig.19

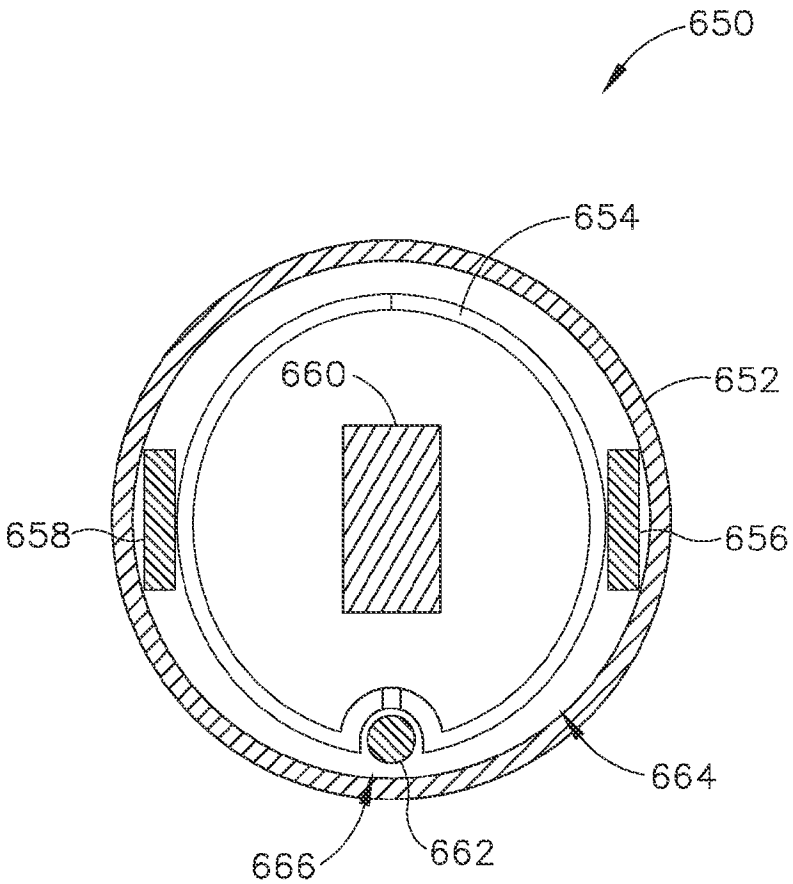

Fig.20

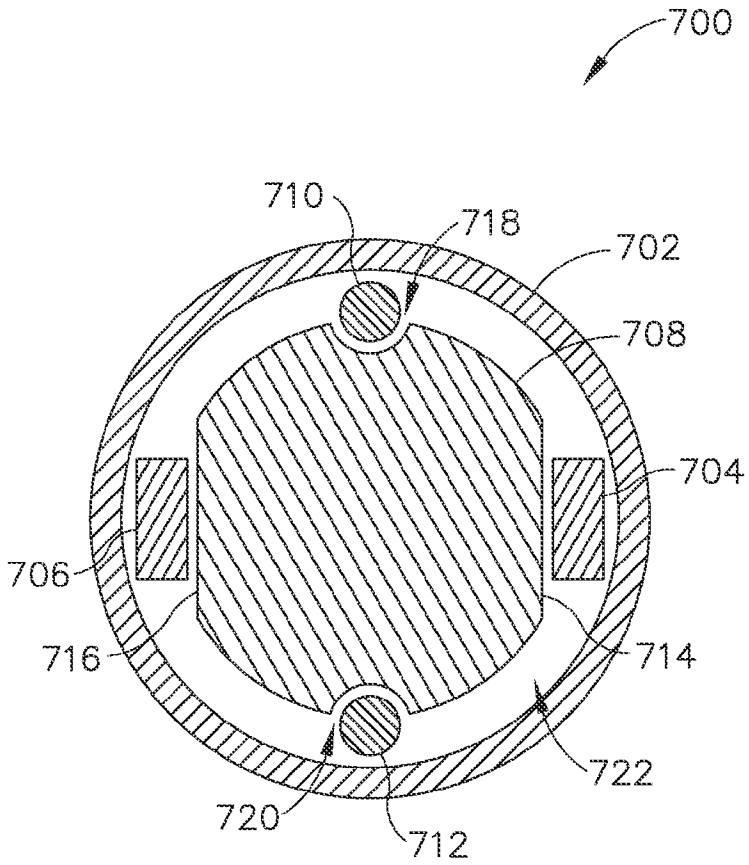

Fig.21

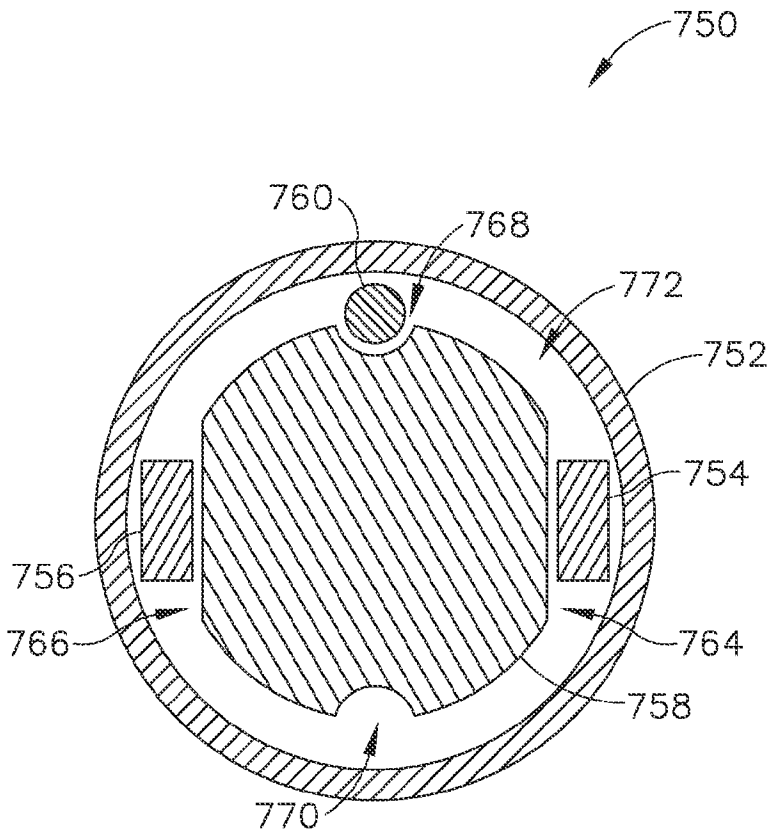

Fig.22

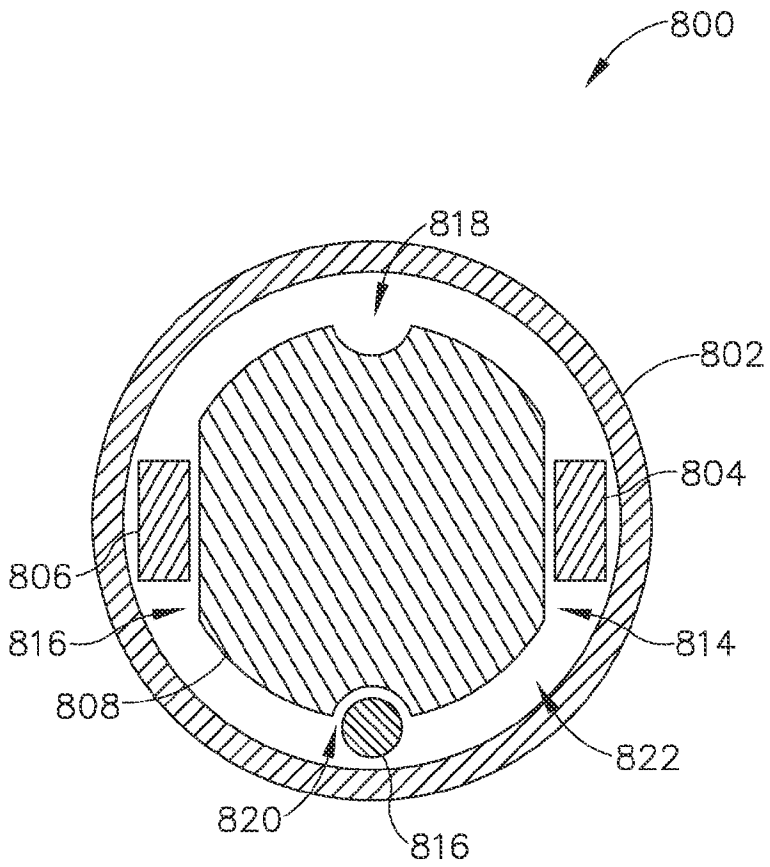

Fig.23

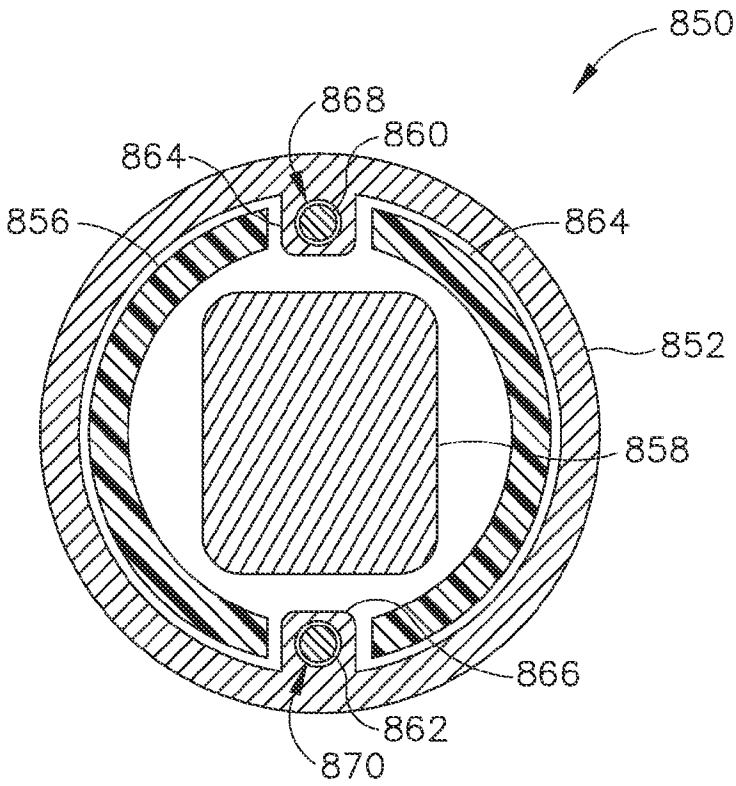

Fig.24

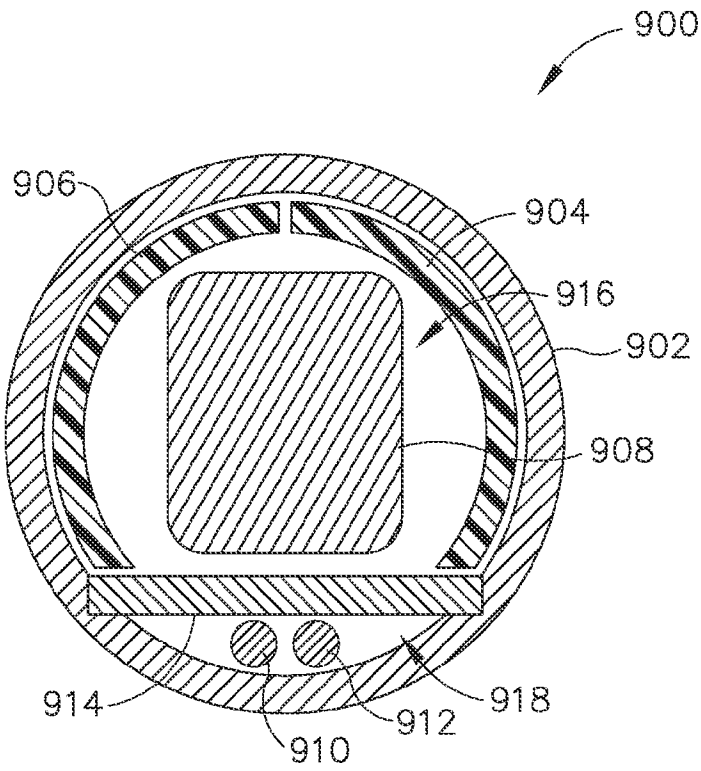

Fig.25

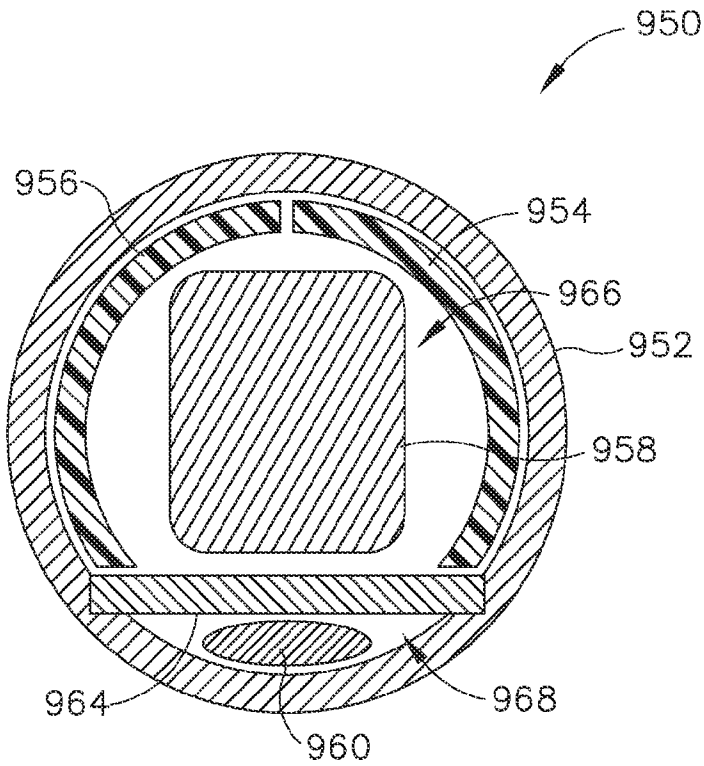

Fig.26

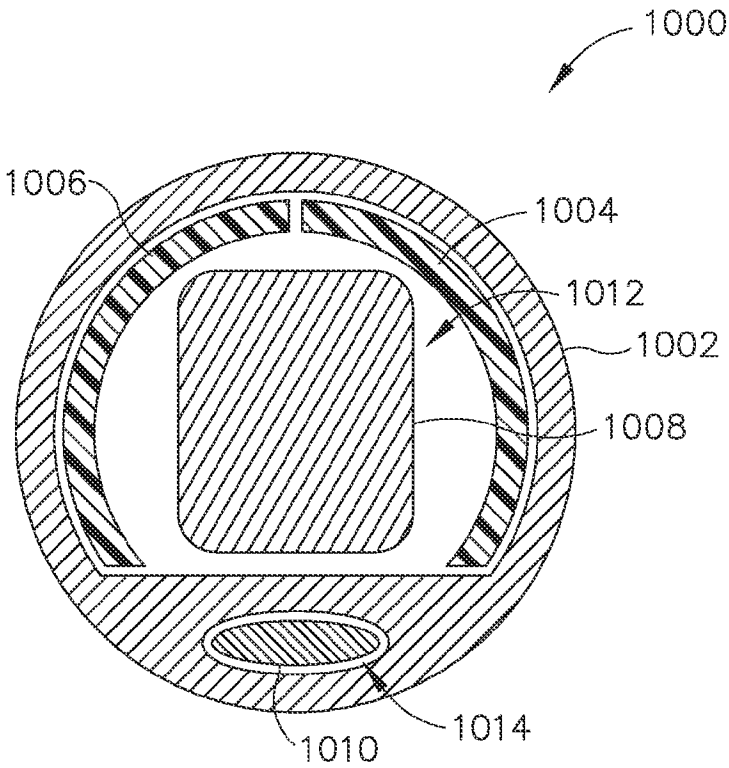

Fig.27

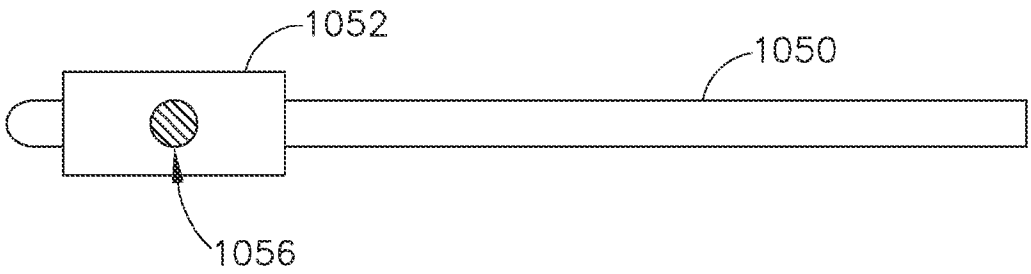

Fig.29

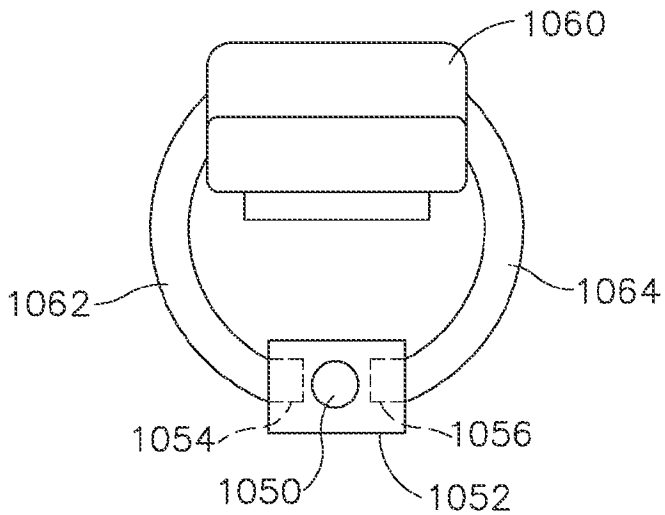

Fig.28

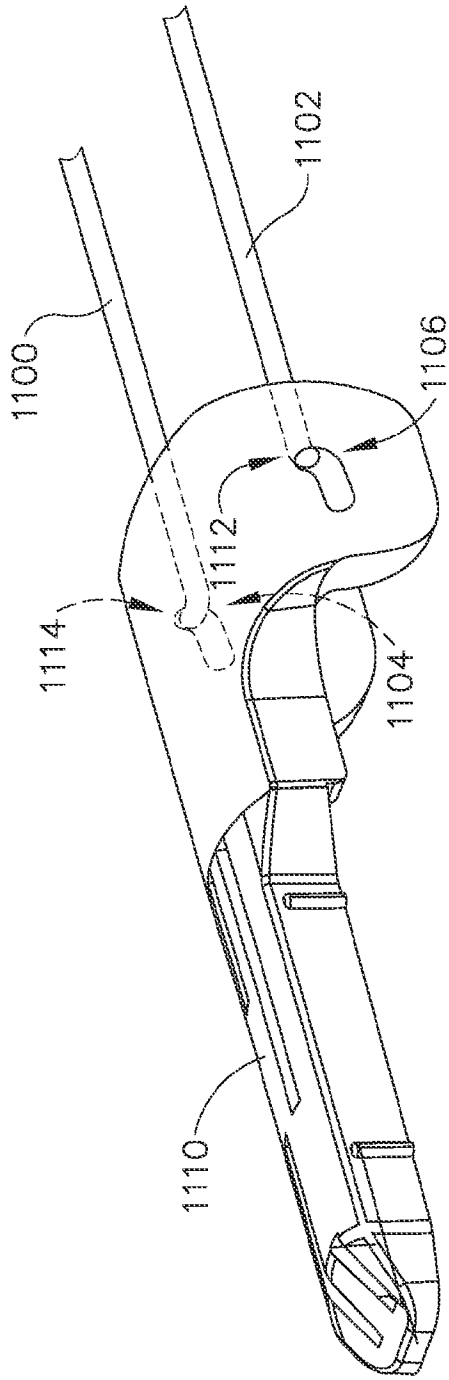

Fig.30

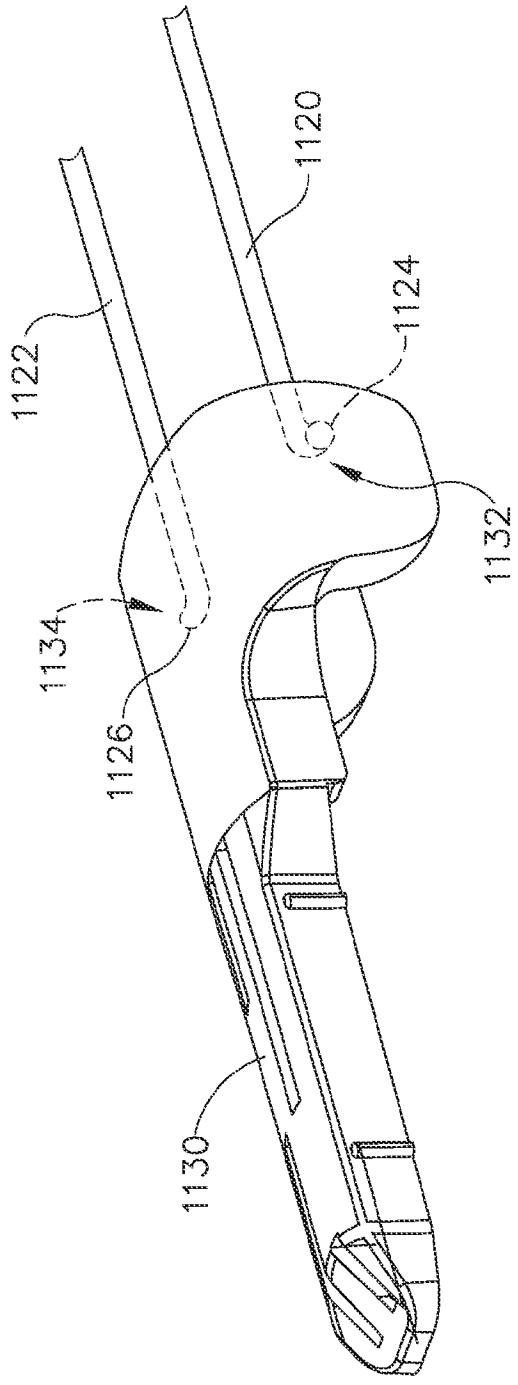

Fig.31

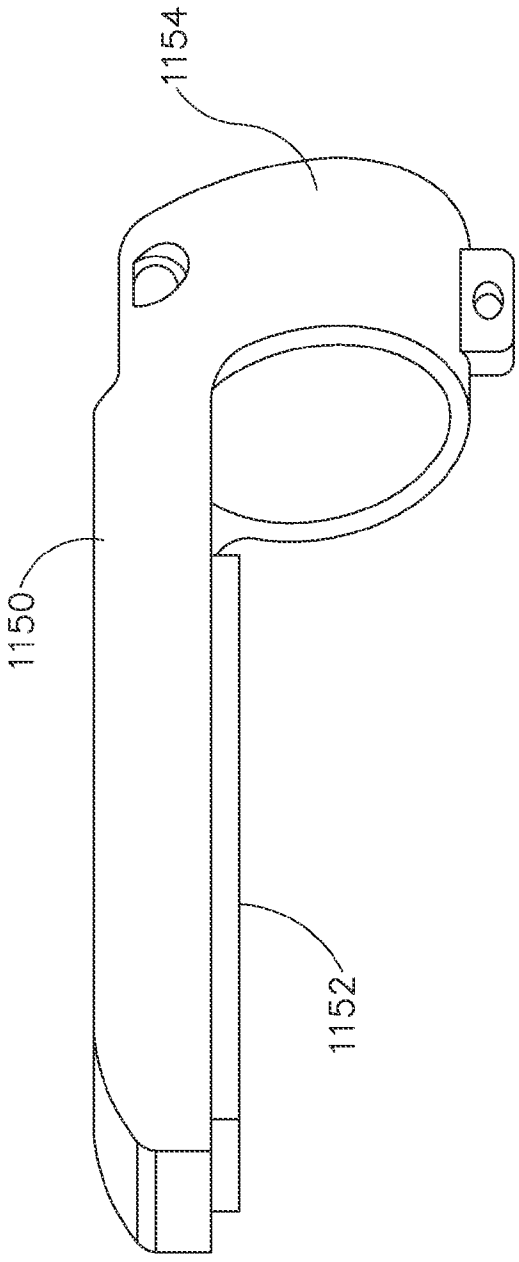

Fig.32

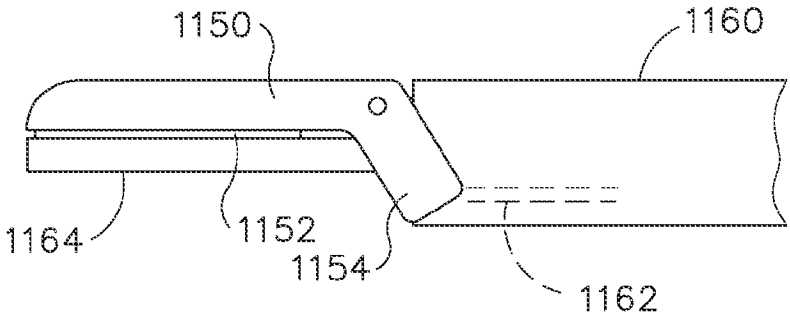

Fig.33A

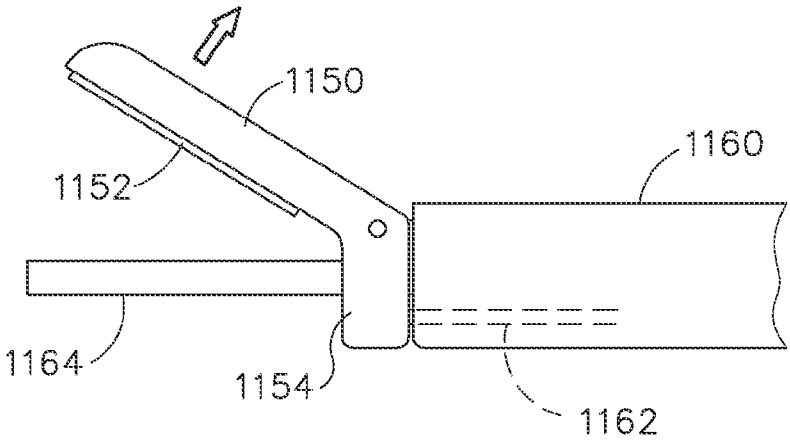

Fig.33B

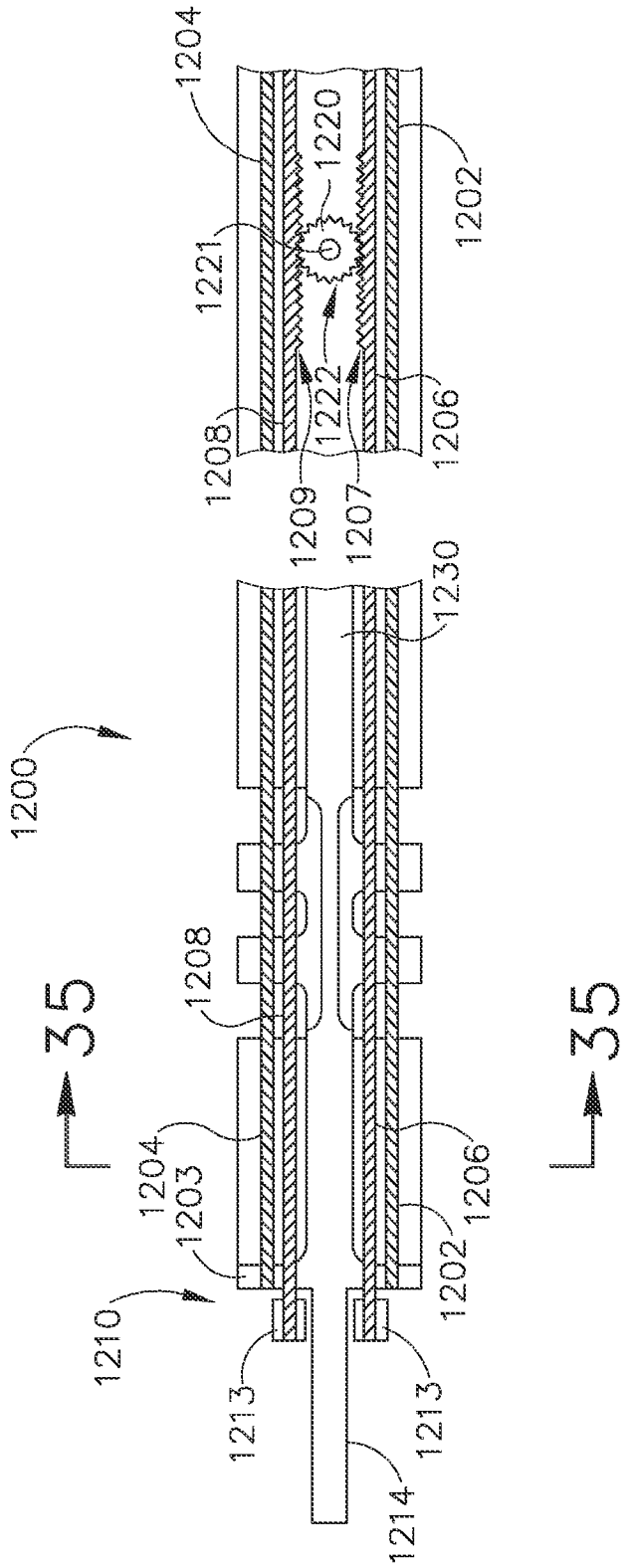
1204
1220
1202
1221
1222
1206
1208
1209
1207
1230
1200
35
1208
1204
1203
1206
1202
1210
1213
1213
1214
35

Fig. 34A

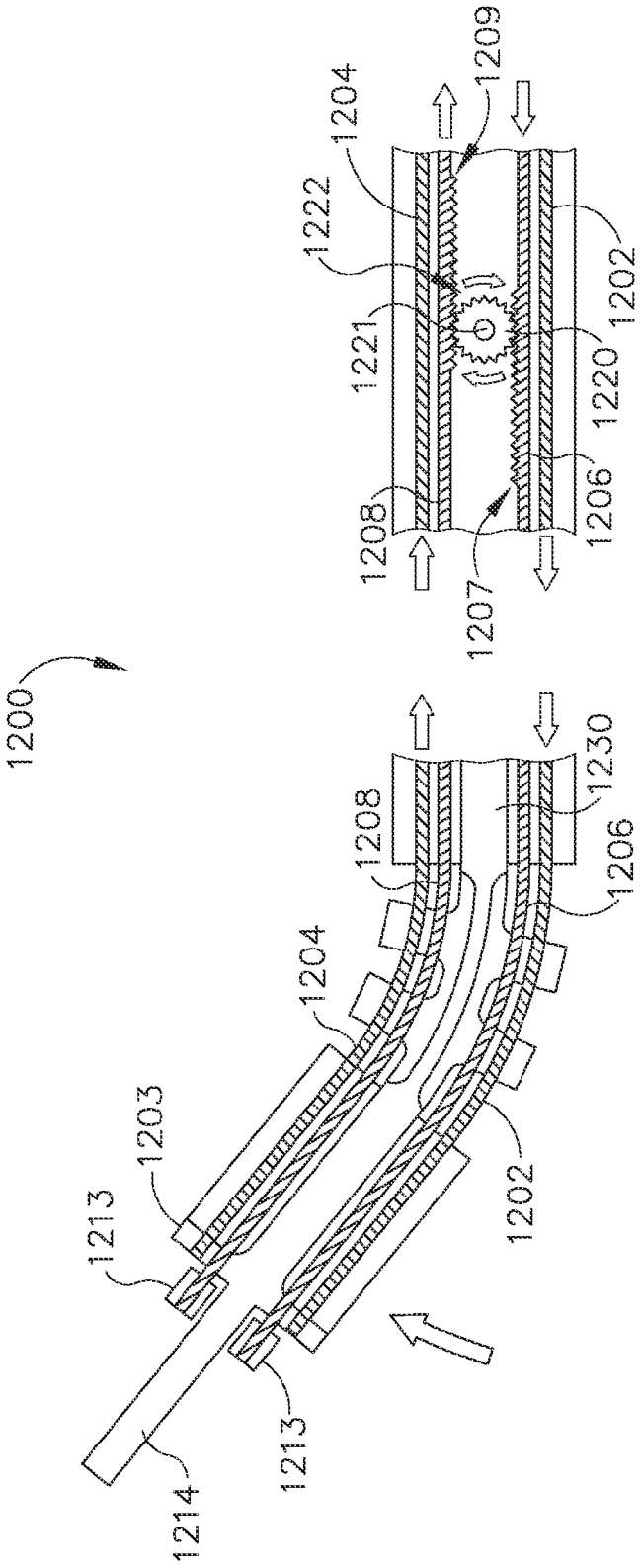
1200
1209
1204
1222
1202
1221
1220
1206
1208
1207
1230
1213
1203
1214

Fig. 34B

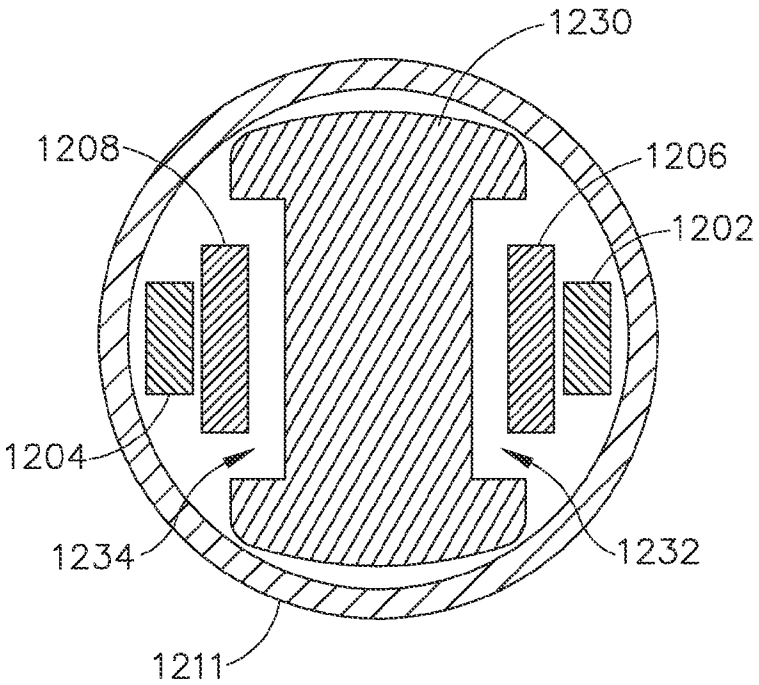

Fig.35

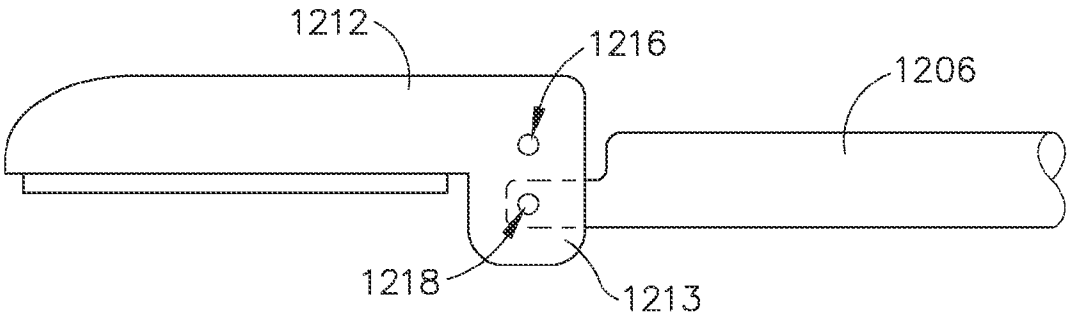

Fig.36

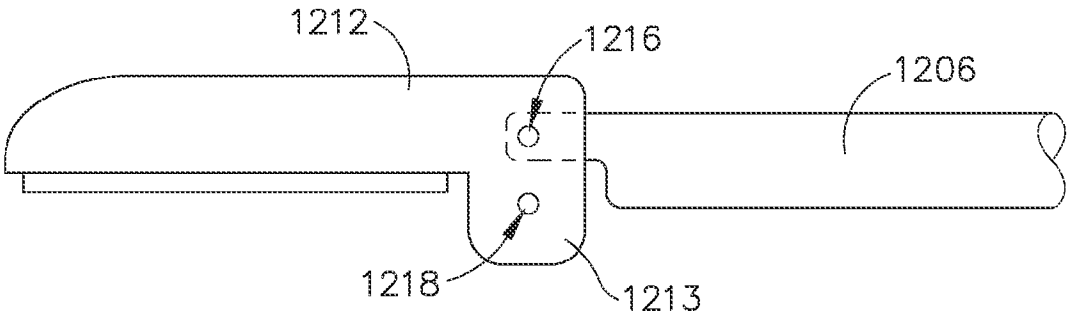

Fig.37

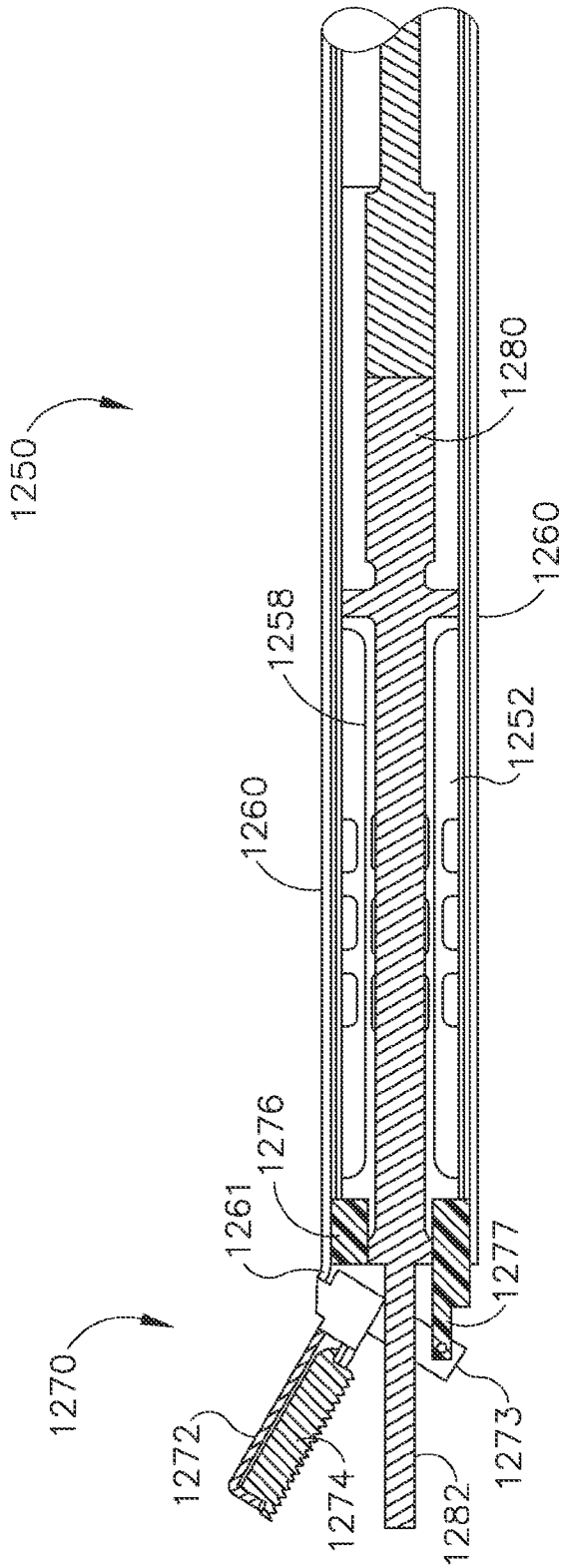
1250
1280
1260
1258
1252
1260
1276
1261
1277
1270
1272
1274
1282
1273

Fig.38

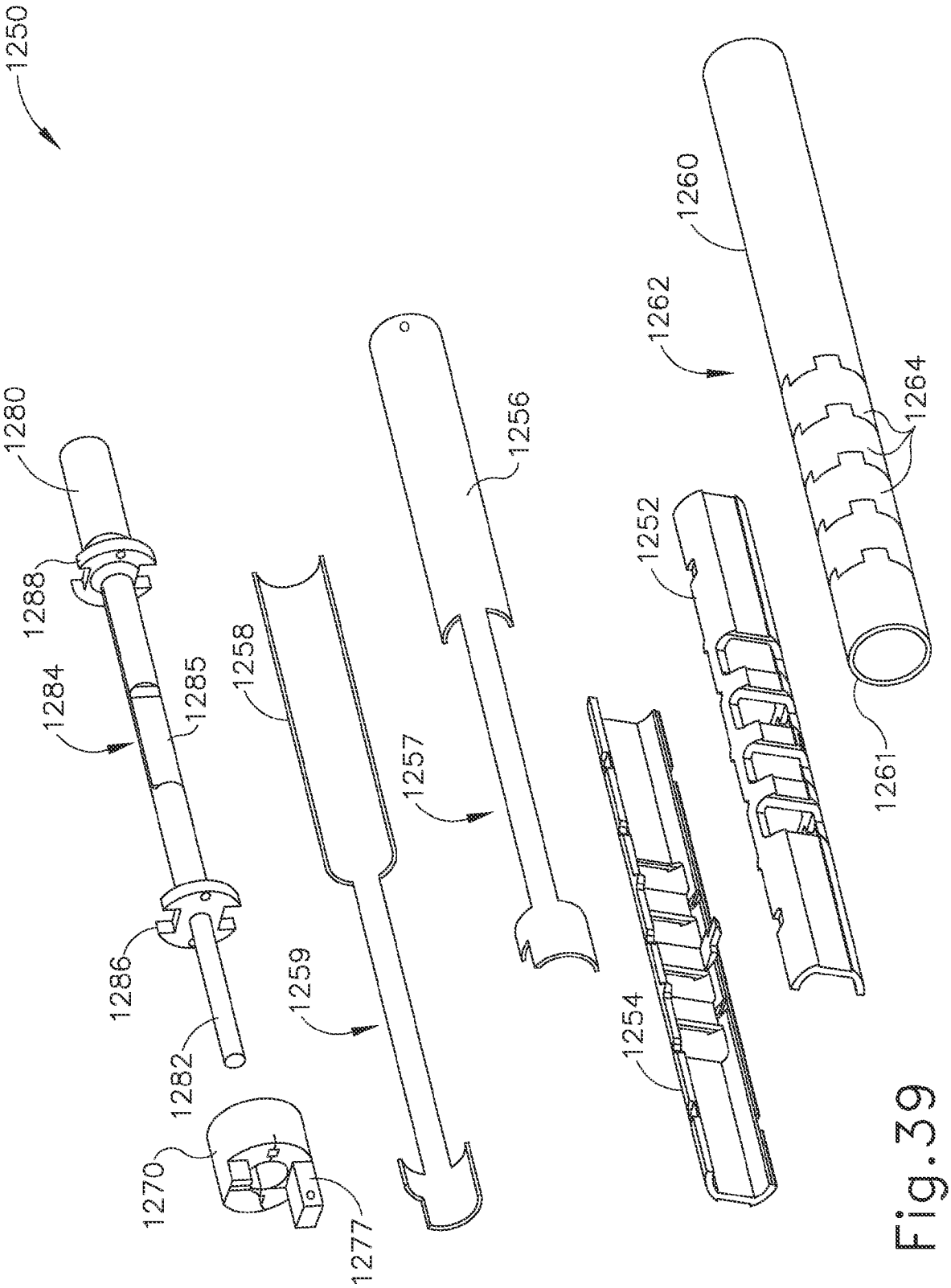
1250
1280
1288
1284
1285
1286
1282
1270
1277
1258
1259
1257
1256
1260
1262
1264
1252
1254
1261

Fig. 39

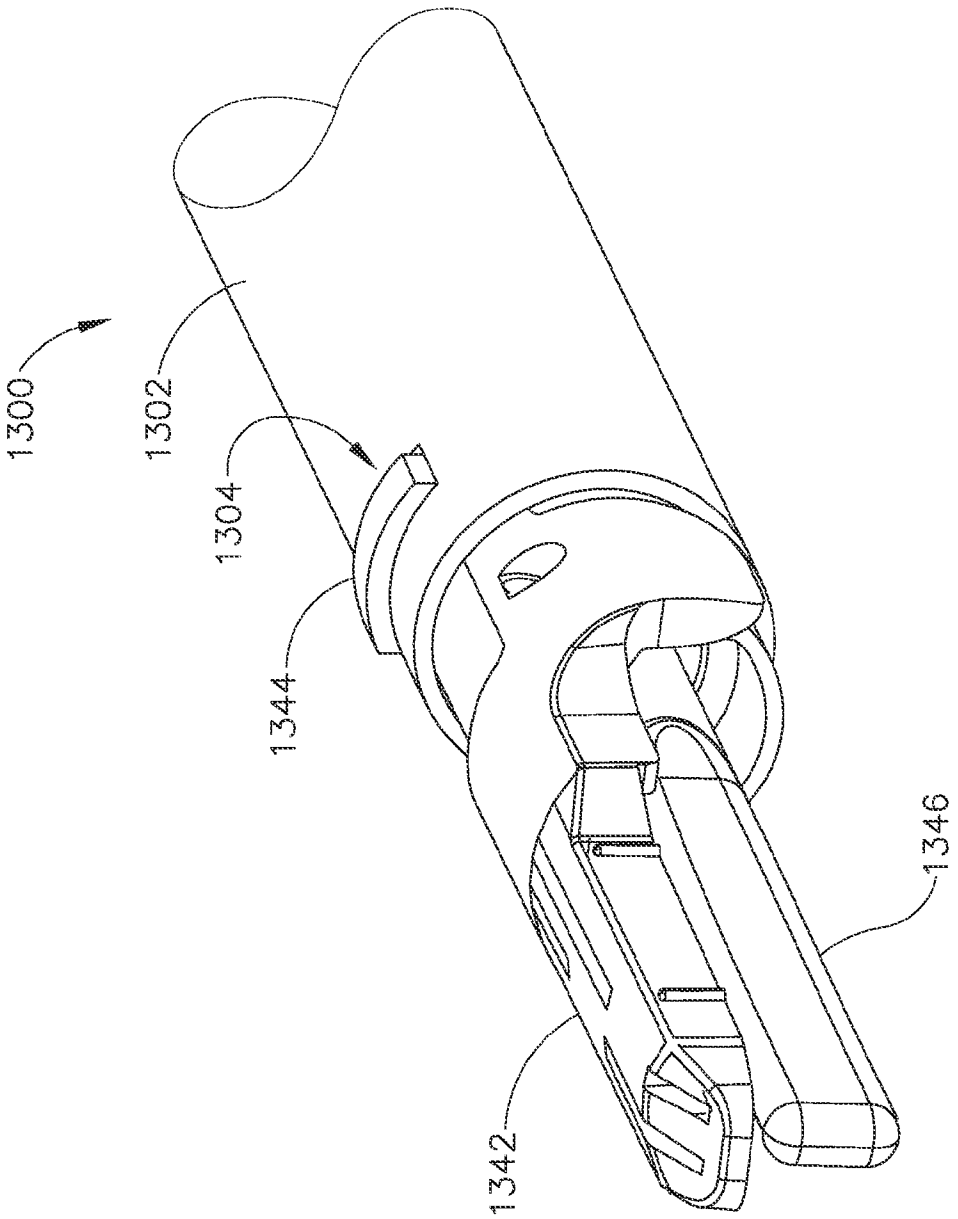

Fig.40

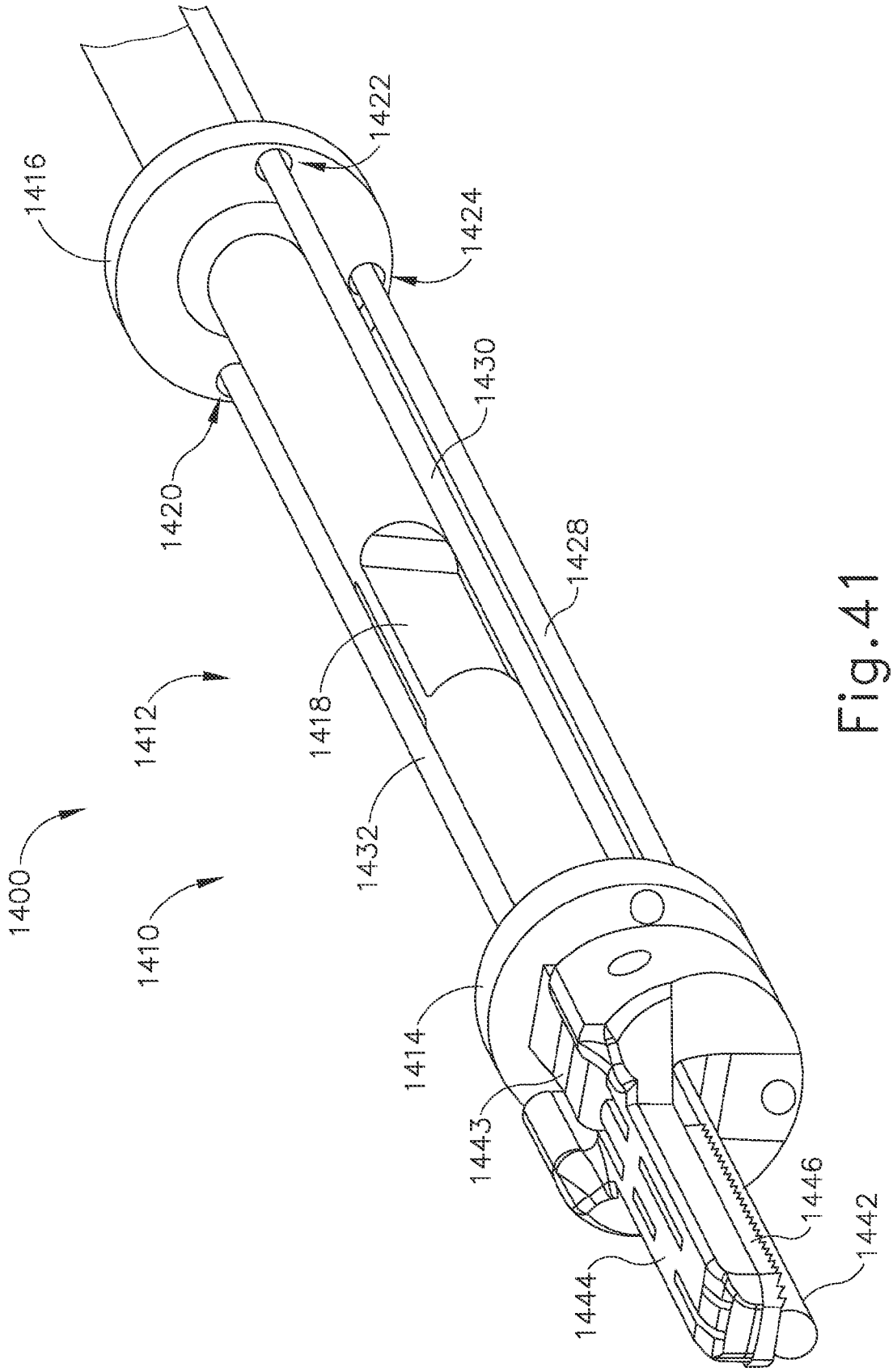
1400
1410
1412
1414
1416
1418
1420
1422
1424
1428
1430
1432
1442
1443
1444
1446

Fig. 41

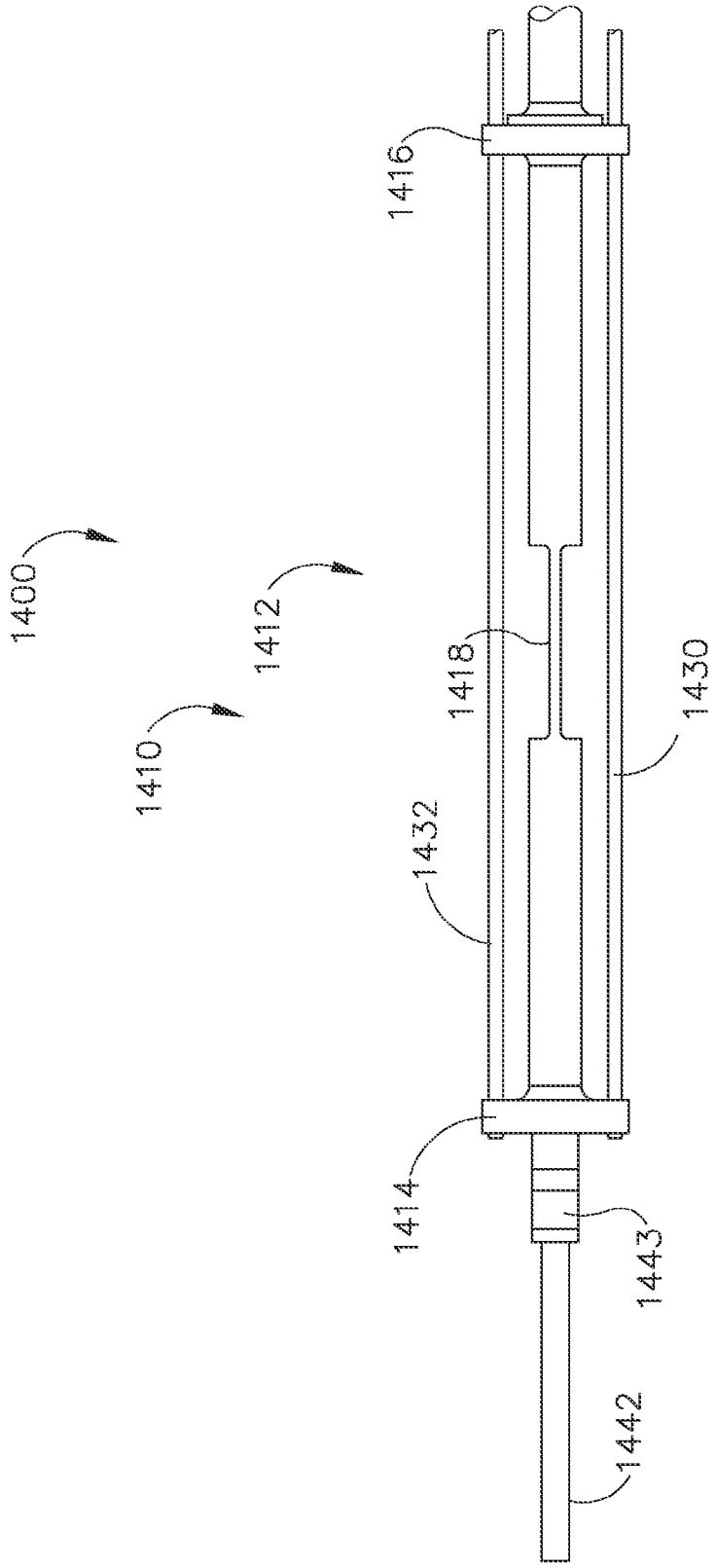

Fig. 42A

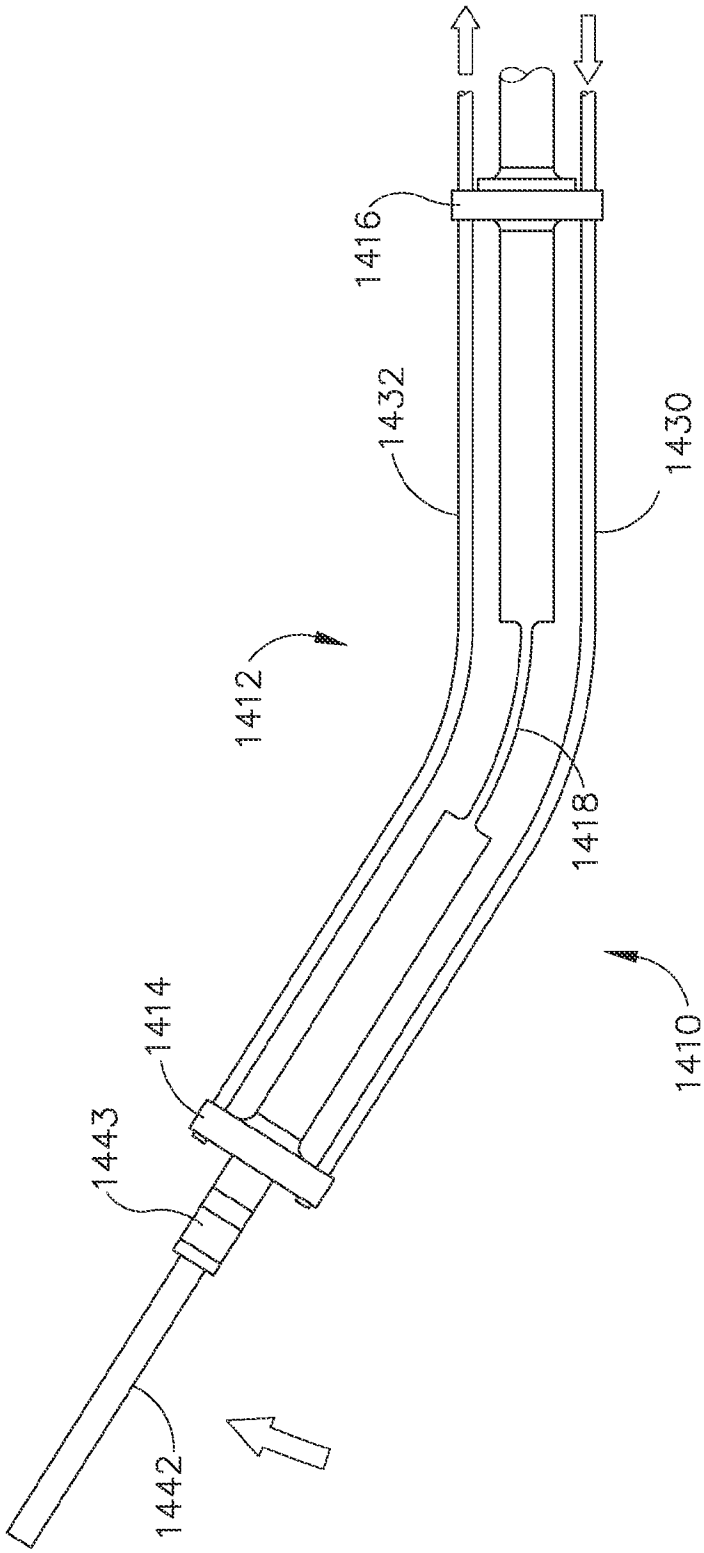

Fig. 42B

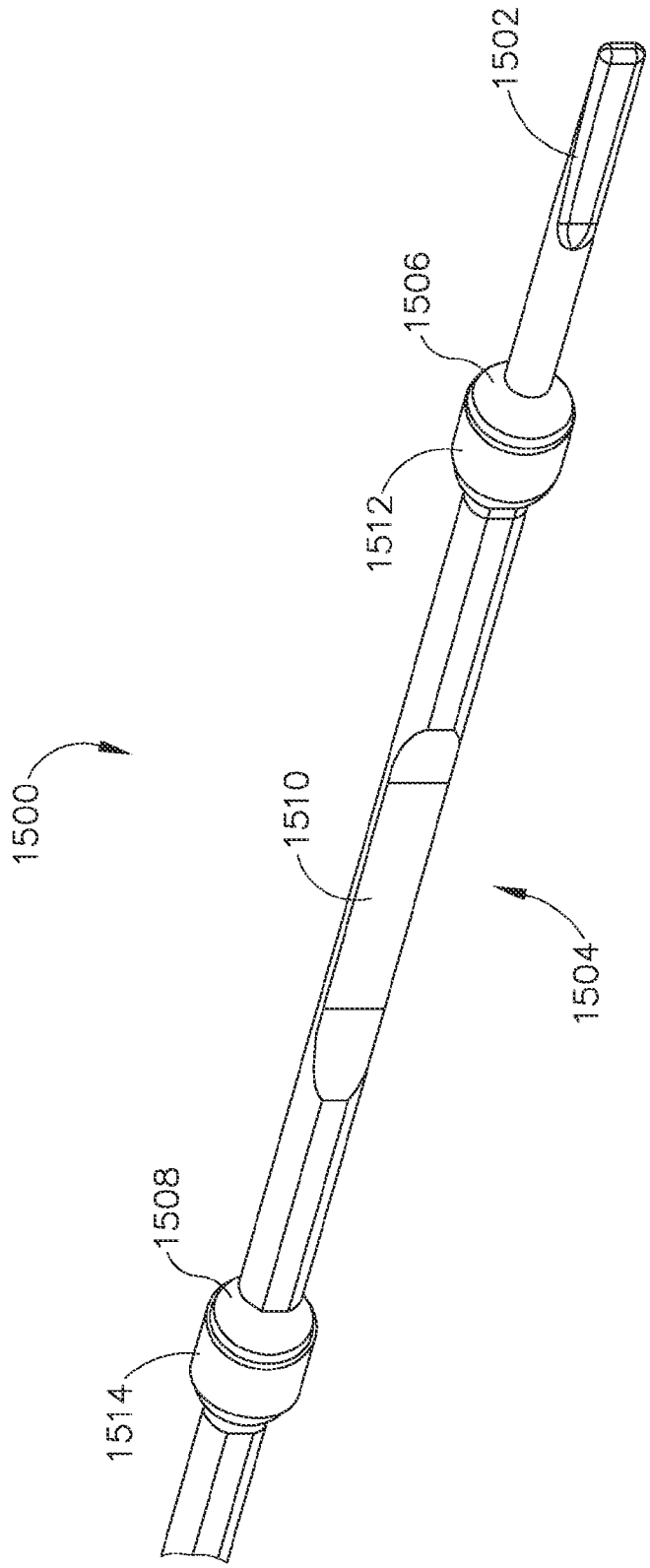

Fig. 43

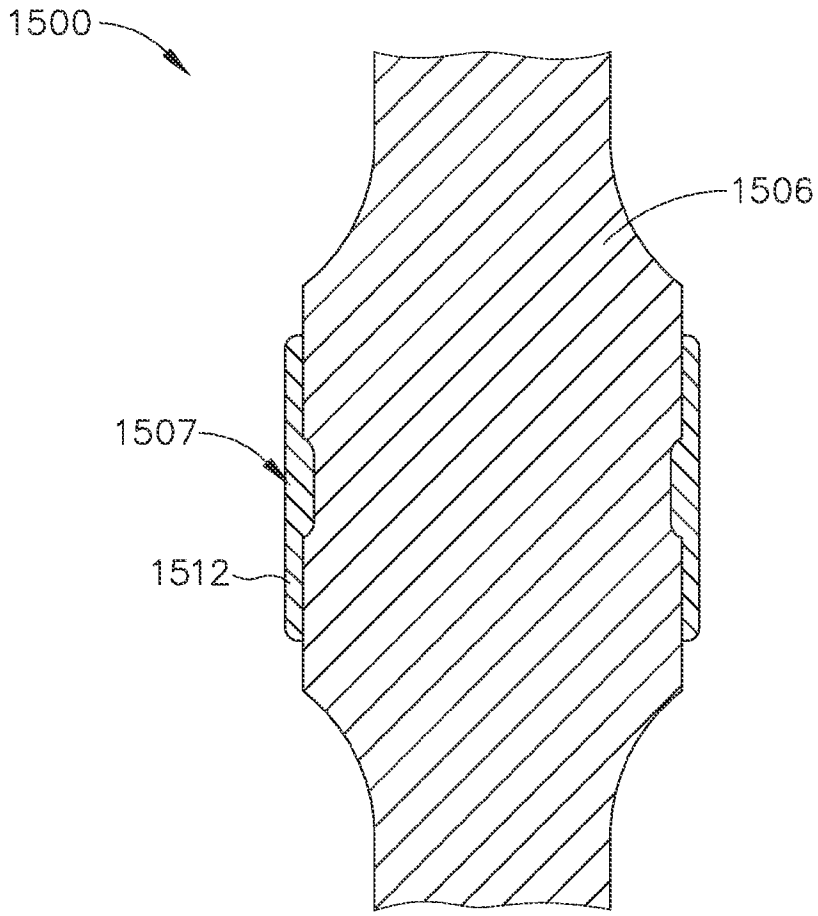

Fig.44

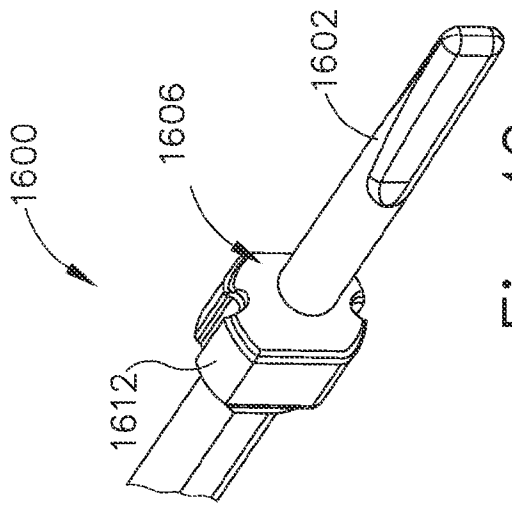

Fig.49

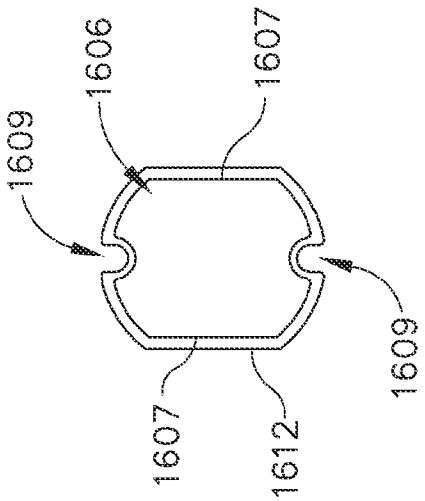

Fig.50

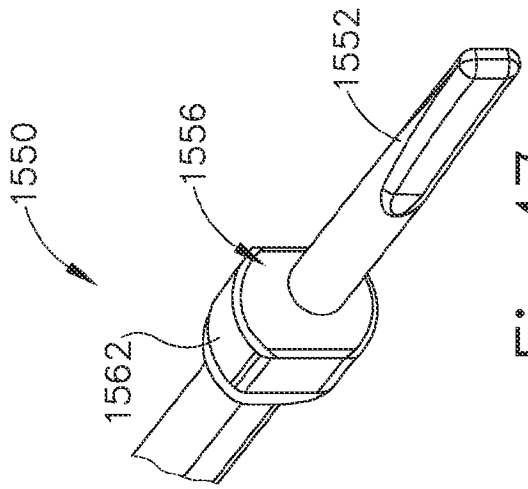

Fig.47

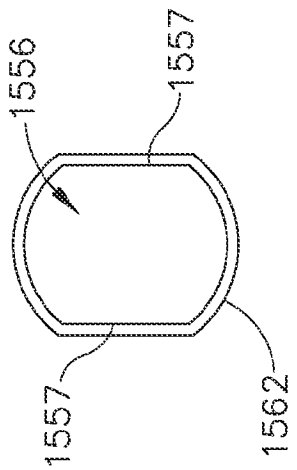

Fig.48

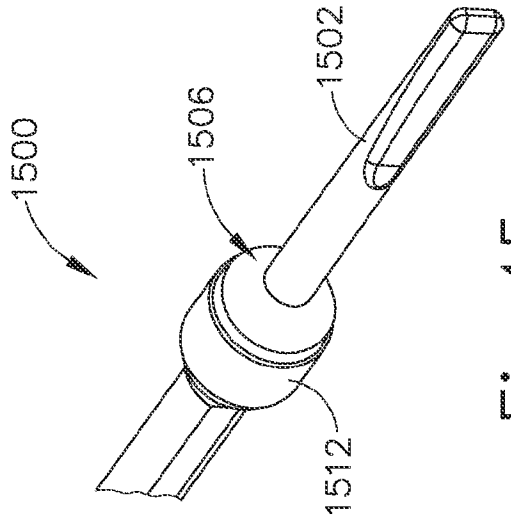

Fig.45

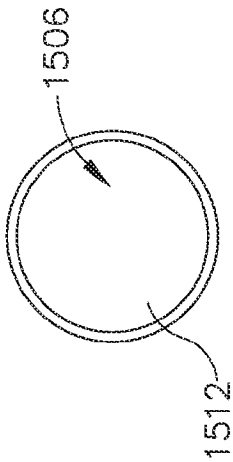

Fig.46

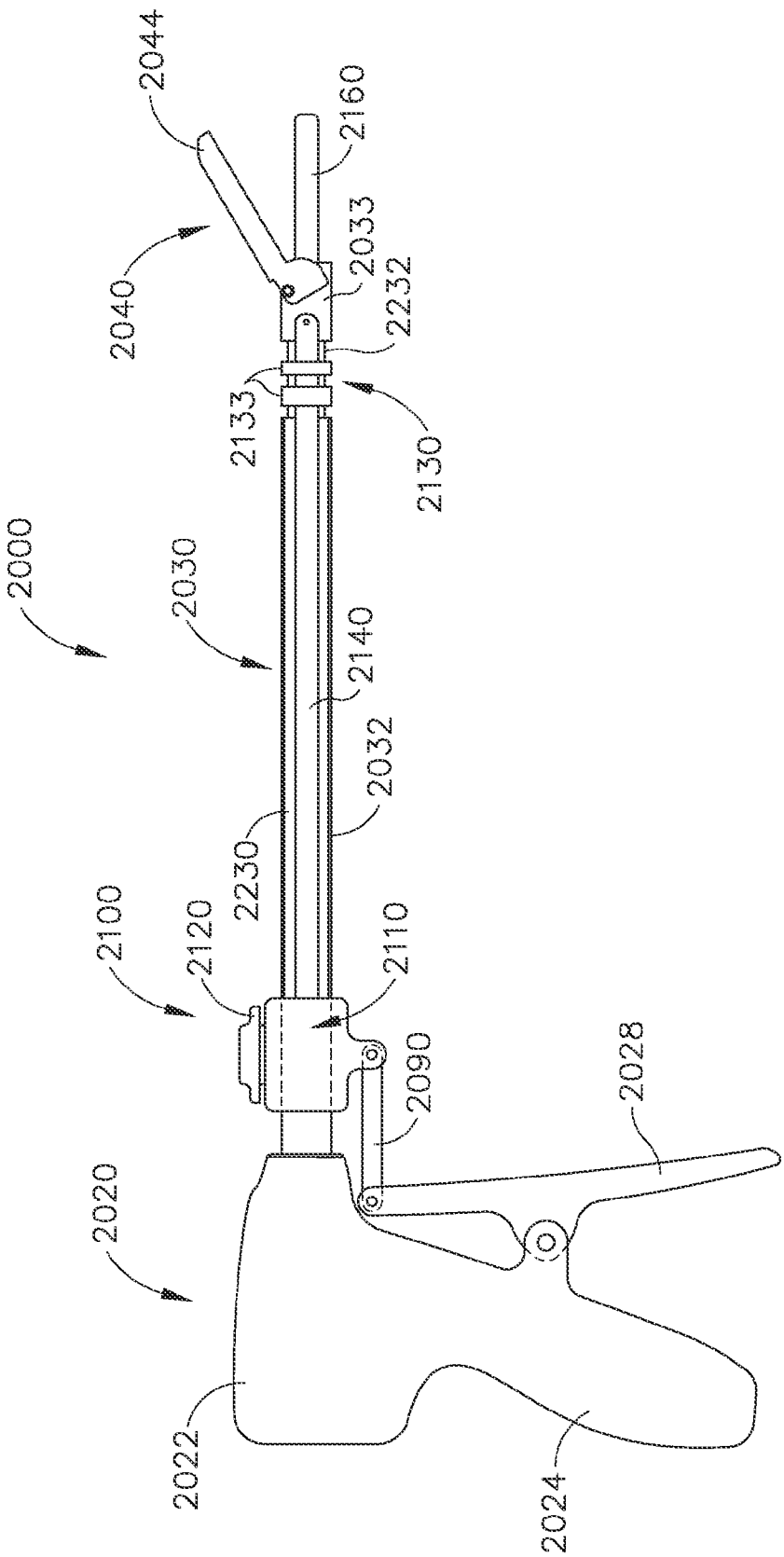
2044
2160
2033
2232
2040
2133
2130
2000
2030
2140
2032
2230
2100
2120
2110
2090
2028
2020
2022
2024

Fig. 51

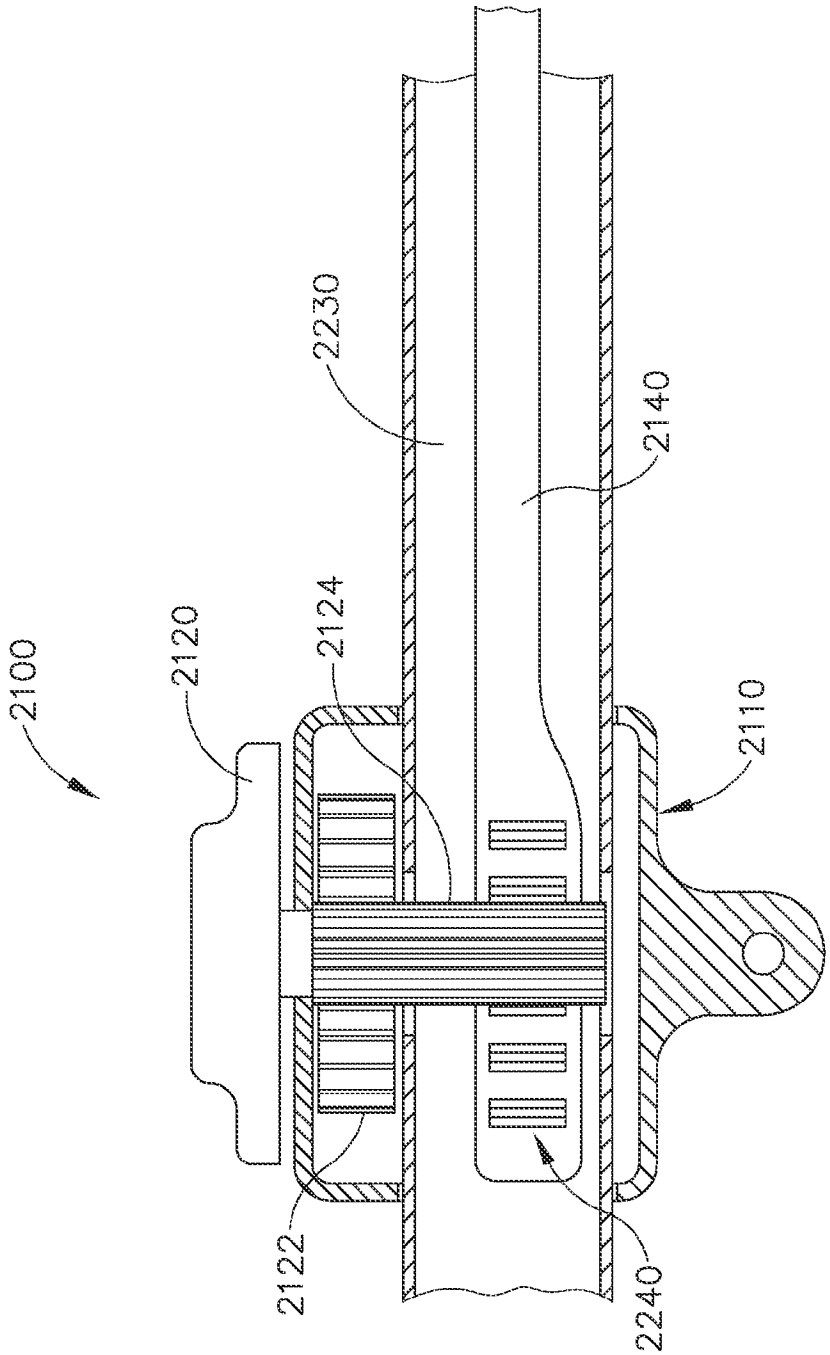

Fig. 52

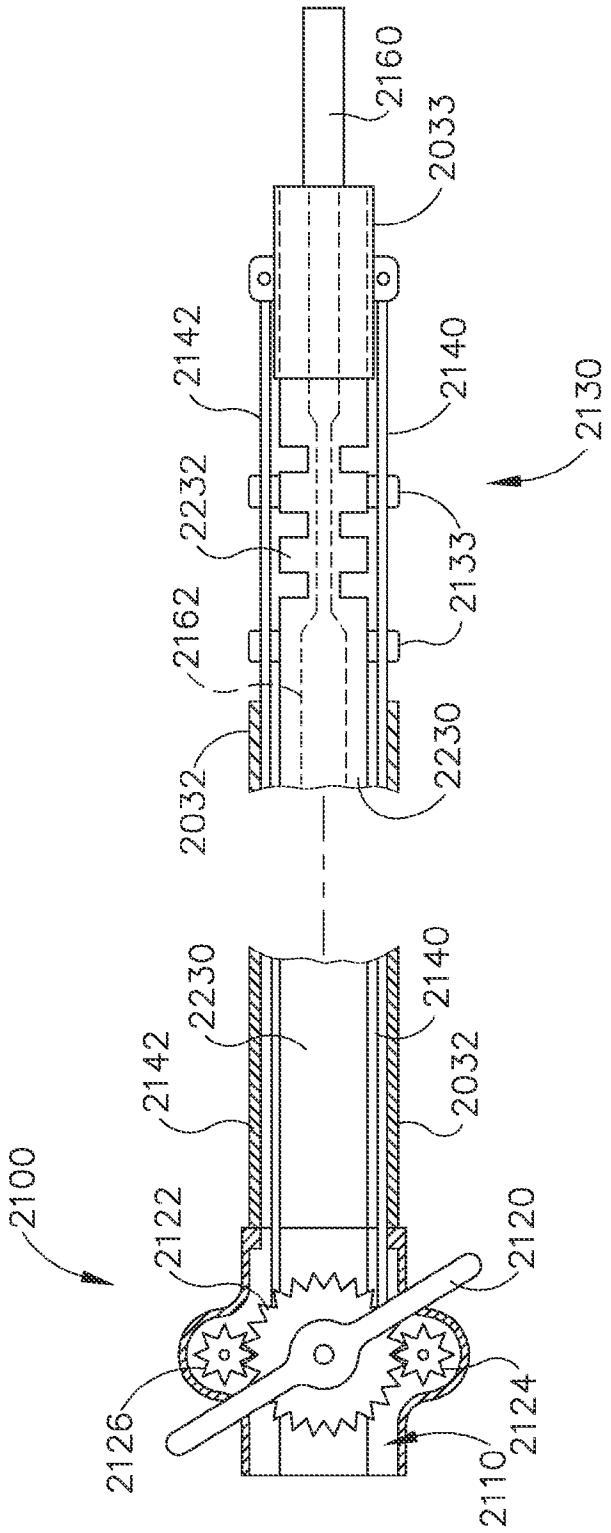
2160
2033
2142
2140
2130
2232
2133
2162
2230
2032
2140
2230
2142
2032
2100
2122
2120
2126
2124
2110

Fig.53

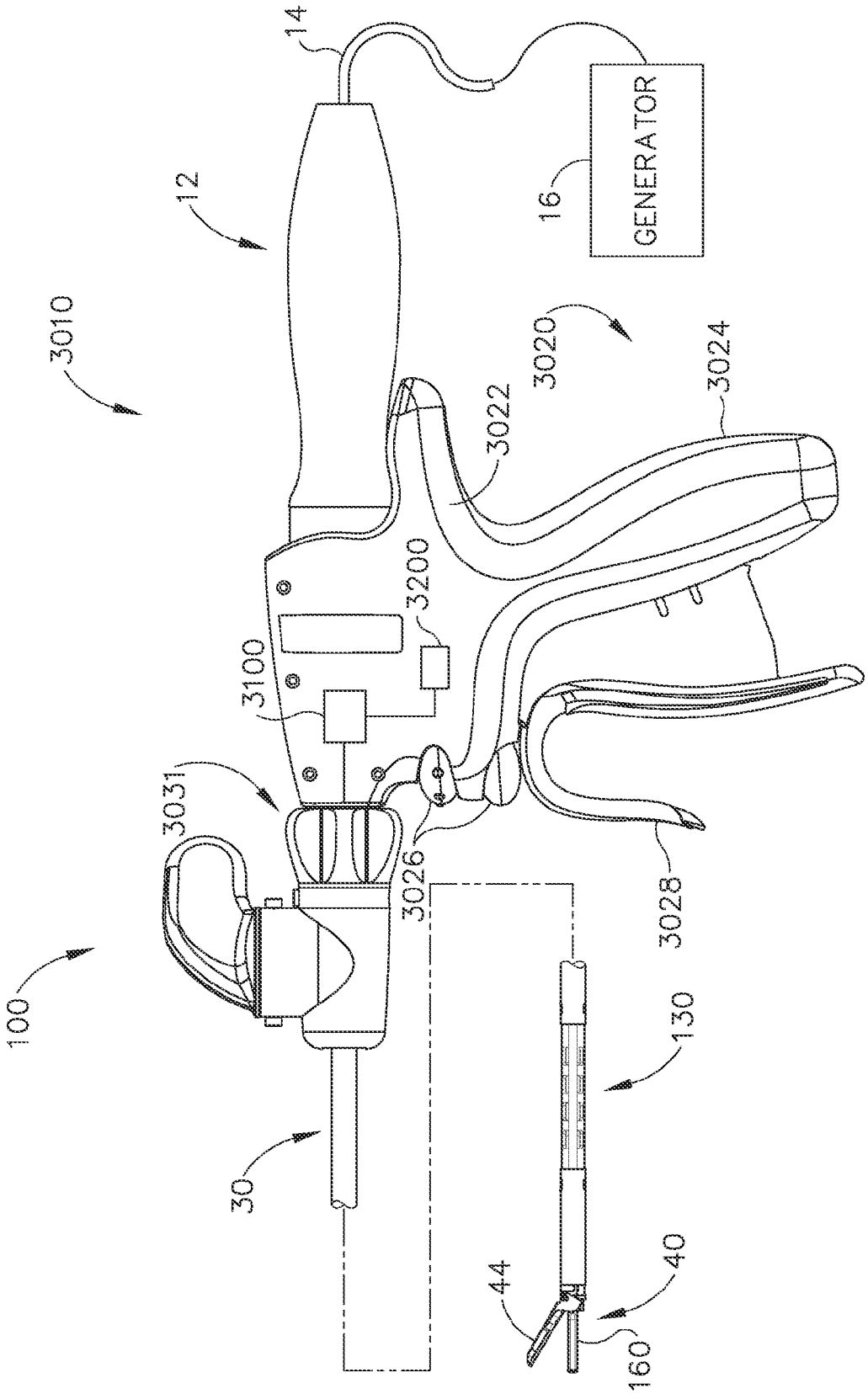
14
GENERATOR
16
12
3010
3020
3024
3022
3200
3100
3031
3026
3028
100
130
30
44
40
160

Fig.54

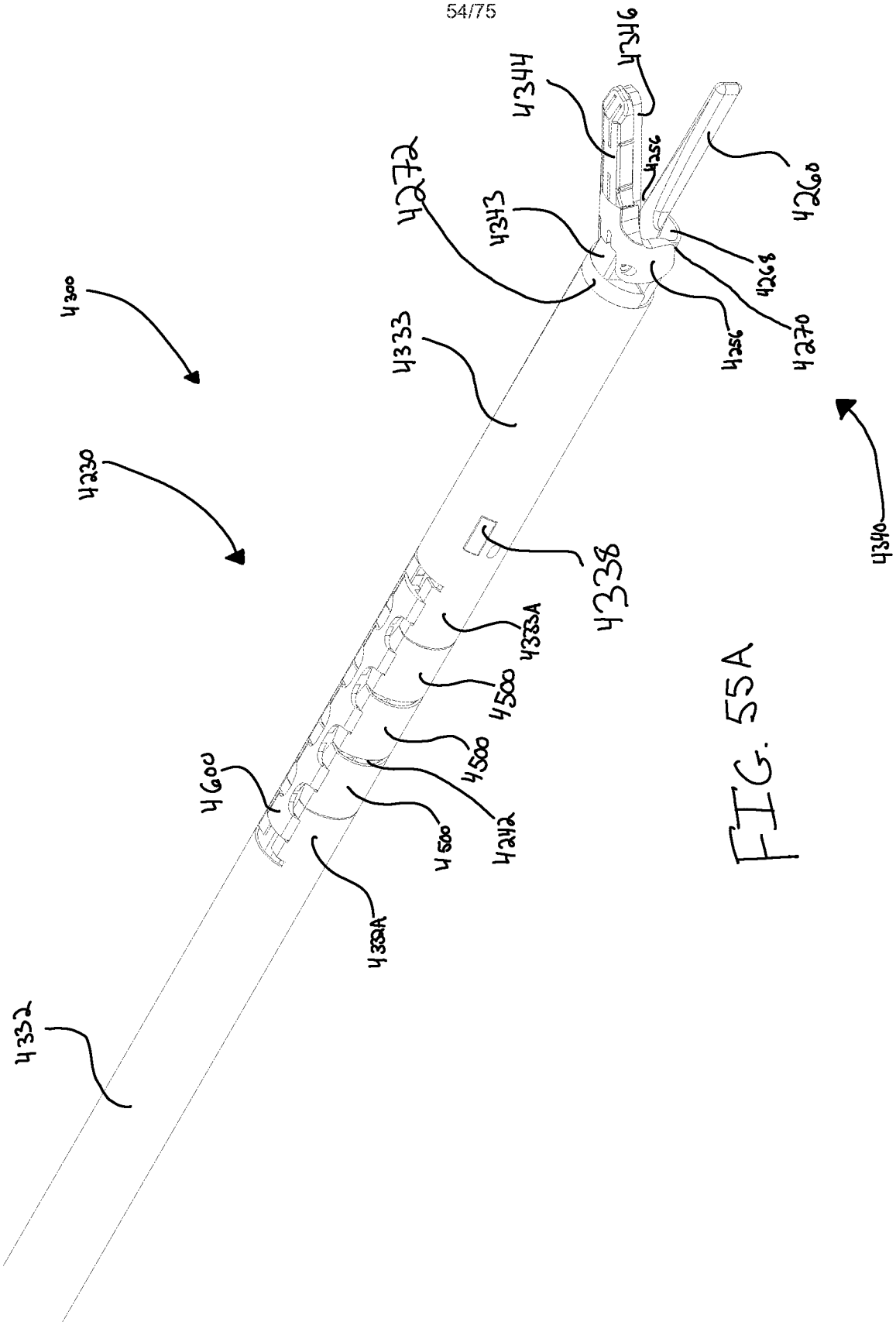
4300
4230
4332
4333
4272
4343
4344
4346
4256
4260
4268
4270
4340
4338
4333A
4500
4500
4500
4212
4600
4338A

FIG. 55A

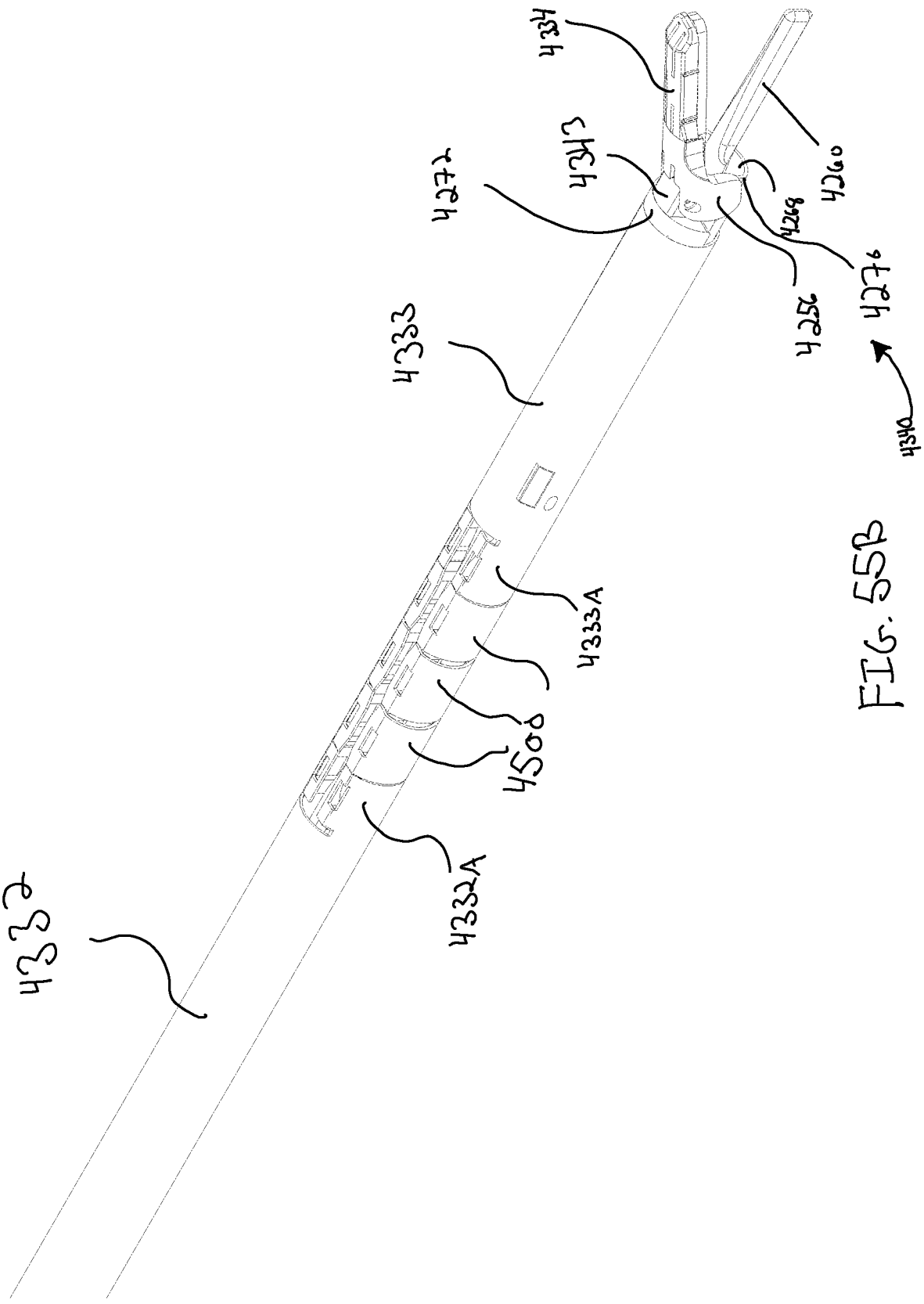
4334
4343
4272
4260
4268
4276
4256
4340
4333
4333A
4500
4332A
4332

FIG. 55B

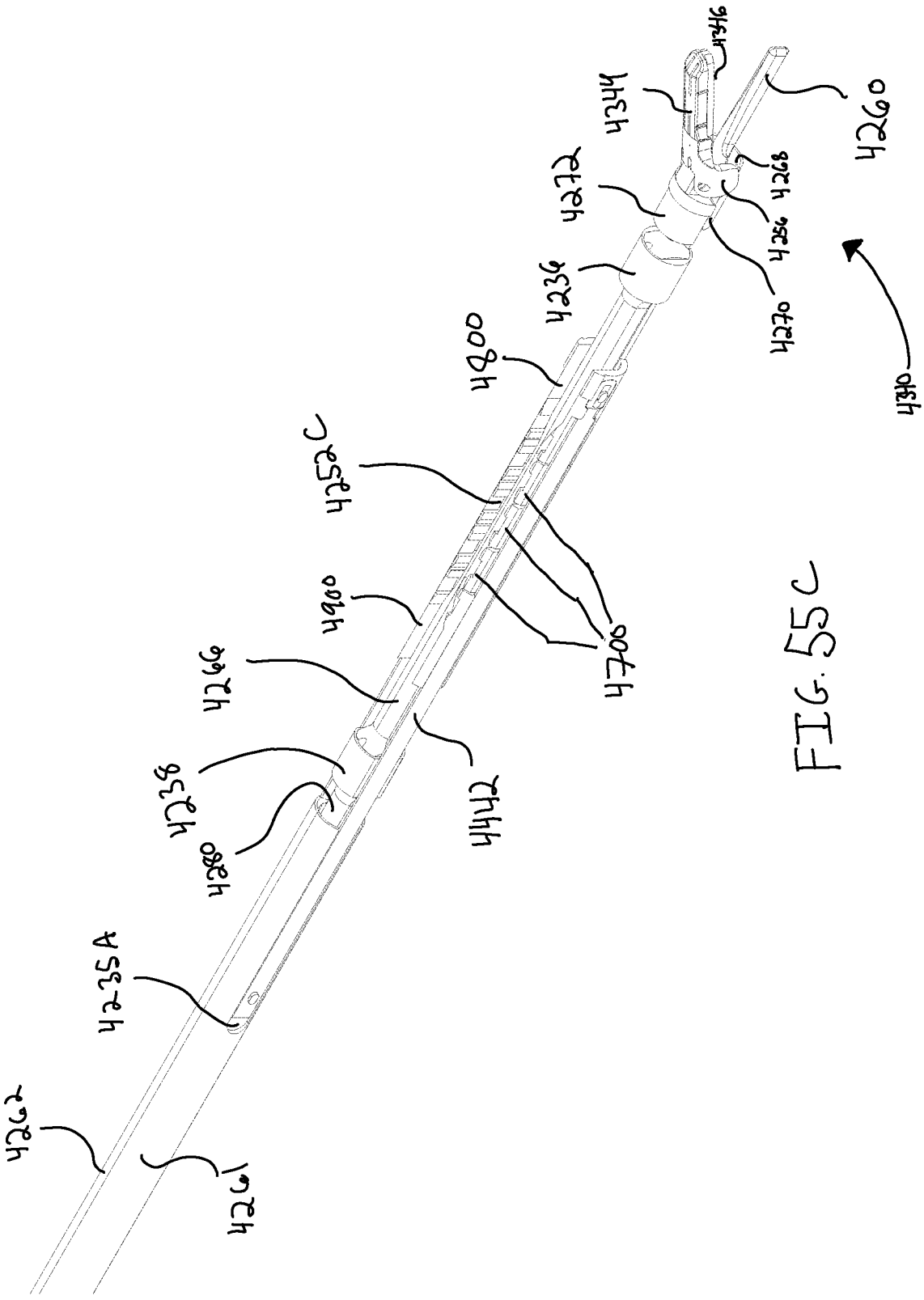
4200
4202
4204
4206
4208
4210
4212
4214
4216
4218
4220
4222
4224
4226
4228
4230
4232
4234
4236
4238
4240
4242
4244
4246
4248
4250
4252
4254
4256
4258
4260
4262
4264
4266
4268
4270
4272
4274
4276
4278
4280
4282
4284
4286
4288
4290
4292
4294
4296
4298
4300
4302
4304
4306
4308
4310
4312
4314
4316
4318
4320
4322
4324
4326
4328
4330
4332
4334
4336
4338
4340
4342
4344
4346
4348
4350
4352
4354
4356
4358
4360
4362
4364
4366
4368
4370
4372
4374
4376
4378
4380
4382
4384
4386
4388
4390
4392
4394
4396
4398
4400
4402
4404
4406
4408
4410
4412
4414
4416
4418
4420
4422
4424
4426
4428
4430
4432
4434
4436
4438
4440
4442
4444
4446
4448
4450
4452
4454
4456
4458
4460
4462
4464
4466
4468
4470
4472
4474
4476
4478
4480
4482
4484
4486
4488
4490
4492
4494
4496
4498
4500
4502
4504
4506
4508
4510
4512
4514
4516
4518
4520
4522
4524
4526
4528
4530
4532
4534
4536
4538
4540
4542
4544
4546
4548
4550
4552
4554
4556
4558
4560
4562
4564
4566
4568
4570
4572
4574
4576
4578
4580
4582
4584
4586
4588
4590
4592
4594
4596
4598
4600
4602
4604
4606
4608
4610
4612
4614
4616
4618
4620
4622
4624
4626
4628
4630
4632
4634
4636
4638
4640
4642
4644
4646
4648
4650
4652
4654
4656
4658
4660
4662
4664
4666
4668
4670
4672
4674
4676
4678
4680
4682
4684
4686
4688
4690
4692
4694
4696
4698
4700
4702
4704
4706
4708
4710
4712
4714
4716
4718
4720
4722
4724
4726
4728
4730
4732
4734
4736
4738
4740
4742
4744
4746
4748
4750
4752
4754
4756
4758
4760
4762
4764
4766
4768
4770
4772
4774
4776
4778
4780
4782
4784
4786
4788
4790
4792
4794
4796
4798
4800
4802
4804
4806
4808
4810
4812
4814
4816
4818
4820
4822
4824
4826
4828
4830
4832
4834
4836
4838
4840
4842
4844
4846
4848
4850
4852
4854
4856
4858
4860
4862
4864
4866
4868
4870
4872
4874
4876
4878
4880
4882
4884
4886
4888
4890
4892
4894
4896
4898
4900
4902
4904
4906
4908
4910
4912
4914
4916
4918
4920
4922
4924
4926
4928
4930
4932
4934
4936
4938
4940
4942
4944
4946
4948
4950
4952
4954
4956
4958
4960
4962
4964
4966
4968
4970
4972
4974
4976
4978
4980
4982
4984
4986
4988
4990
4992
4994
4996
4998
5000
5002
5004
5006
5008
5010
5012
5014
5016
5018
5020
5022
5024
5026
5028
5030
5032
5034
5036
5038
5040
5042
5044
5046
5048
5050
5052
5054
5056
5058
5060
5062
5064
5066
5068
5070
5072
5074
5076
5078
5080
5082
5084
5086
5088
5090
5092
5094
5096
5098
5100
5102
5104
5106
5108
5110
5112
5114
5116
5118
5120
5122
5124
5126
5128
5130
5132
5134
5136
5138
5140
5142
5144
5146
5148
5150
5152
5154
5156
5158
5160
5162
5164
5166
5168
5170
5172
5174
5176
5178
5180
5182
5184
5186
5188
5190
5192
5194
5196
5198
5200
5202
5204
5206
5208
5210
5212
5214
5216
5218
5220
5222
5224
5226
5228
5230
5232
5234
5236
5238
5240
5242
5244
5246
5248
5250
5252
5254
5256
5258
5260
5262
5264
5266
5268
5270
5272
5274
5276
5278
5280
5282
5284
5286
5288
5290
5292
5294
5296
5298
5300
5302
5304
5306
5308
5310
5312
5314
5316
5318
5320
5322
5324
5326
5328
5330
5332
5334
5336
5338
5340
5342
5344
5346
5348
5350
5352
5354
5356
5358
5360
5362
5364
5366
5368
5370
5372
5374
5376
5378
5380
5382
5384
5386
5388
5390
5392
5394
5396
5398
5400
5402
5404
5406
5408
5410
5412
5414
5416
5418
5420
5422
5424
5426
5428
5430
5432
5434
5436
5438
5440
5442
5444
5446
5448
5450
5452
5454
5456
5458
5460
5462
5464
5466
5468
5470
5472
5474
5476
5478
5480
5482
5484
5486
5488
5490
5492
5494
5496
5498
5500
5502
5504
5506
5508
5510
5512
5514
5516
5518
5520
5522
5524
5526
5528
5530
5532
5534
5536
5538
5540
5542
5544
5546
5548
5550
5552
5554
5556
5558
5560
5562
5564
5566
5568
5570
5572
5574
5576
5578
5580
5582
5584
5586
5588
5590
5592
5594
5596
5598
5600
5602
5604
5606
5608
5610
5612
5614
5616
5618
5620
5622
5624
5626
5628
5630
5632
5634
5636
5638
5640
5642
5644
5646
5648
5650
5652
5654
5656
5658
5660
5662
5664
5666
5668
5670
5672
5674
5676
5678
5680
5682
5684
5686
5688
5690
5692
5694
5696
5698
5700
5702
5704
5706
5708
5710
5712
5714
5716
5718
5720
5722
5724
5726
5728
5730
5732
5734
5736
5738
5740
5742
5744
5746
5748
5750
5752
5754
5756
5758
5760
5762
5764
5766
5768
5770
5772
5774
5776
5778
5780
5782
5784
5786
5788
5790
5792
5794
5796
5798
5800
5802
5804
5806
5808
5810
5812
5814
5816
5818
5820
5822
5824
5826
5828
5830
5832
5834
5836
5838
5840
5842
5844
5846
5848
5850
5852
5854
5856
5858
5860
5862
5864
5866
5868
5870
5872
5874
5876
5878
5880
5882
5884
5886
5888
5890
5892
5894
5896
5898
5900
5902
5904
5906
5908
5910
5912
5914
5916
5918
5920
5922
5924
5926
5928
5930
5932
5934
5936
5938
5940
5942
5944
5946
5948
5950
5952
5954
5956
5958
5960
5962
5964
5966
5968
5970
5972
5974
5976
5978
5980
5982
5984
5986
5988
5990
5992
5994
5996
5998
6000
6002
6004
6006
6008
6010
6012
6014
6016
6018
6020
6022
6024
6026
6028
6030
6032
6034
6036
6038
6040
6042
6044
6046
6048
6050
6052
6054
6056
6058
6060
6062
6064
6066
6068
6070
6072
6074
6076
6078
6080
6082
6084
6086
6088
6090
6092
6094
6096
6098
6100
6102
6104
6106
6108
6110
6112
6114
6116
6118
6120
6122
6124
6126
6128
6130
6132
6134
6136
6138
6140
6142
6144
6146
6148
6150
6152
6154
6156
6158
6160
6162
6164
6166
6168
6170
6172
6174
6176
6178
6180
6182
6184
6186
6188
6190
6192
6194
6196
6198
6200
6202
6204
6206
6208
6210
6212
6214
6216
6218
6220
6222
6224
6226
6228
6230
6232
6234
6236
6238
6240
6242
6244
6246
6248
6250
6252
6254
6256
6258
6260
6262
6264
6266
6268
6270
6272
6274
6276
6278
6280
6282
6284
6286
6288
6290
6292
6294
6296
6298
6300
6302
6304
6306
6308
6310
6312
6314
6316
6318
6320
6322
6324
6326
6328
6330
6332
6334
6336
6338
6340
6342
6344
6346
6348
6350
6352
6354
6356
6358
6360
6362
6364
6366
6368
6370
6372
6374
6376
6378
6380
6382
6384
6386
6388
6390
6392
6394
6396
6398
6400
6402
6404
6406
6408
6410
6412
6414
6416
6418
6420
6422
6424
6426
6428
6430
6432
6434
6436
6438
6440
6442
6444
6446
6448
6450
6452
6454
6456
6458
6460
6462
6464
6466
6468
6470
6472
6474
6476
6478
6480
6482
6484
6486
6488
6490
6492
6494
6496
6498
6500
6502
6504
6506
6508
6510
6512
6514
6516
6518
6520
6522
6524
6526
6528
6530
6532
6534
6536
6538
6540
6542
6544
6546
6548
6550
6552
6554
6556
6558
6560
6562
6564
6566
6568
6570
6572
6574
6576
6578
6580
6582
6584
6586
6588
6590
6592
6594
6596
6598
6600
6602
6604
6606
6608
6610
6612
6614
6616
6618
6620
6622
6624
6626
6628
6630
6632
6634
6636
6638
6640
6642
6644
6646
6648
6650
6652
6654
6656
6658
6660
6662
6664
6666
6668
6670
6672
6674
6676
6678
6680
6682
6684
6686
6688
6690
6692
6694
6696
6698
6700
6702
6704
6706
6708
6710
6712
6714
6716
6718
6720
6722
6724
6726
6728
6730
6732
6734
6736
6738
6740
6742
6744
6746
6748
6750
6752
6754
6756
6758
6760
6762
6764
6766
6768
6770
6772
6774
6776
6778
6780
6782
6784
6786
6788
6790
6792
6794
6796
6798
6800
6802
6804
6806
6808
6810
6812
6814
6816
6818
6820
6822
6824
6826
6828
6830
6832
6834
6836
6838
6840
6842
6844
6846
6848
6850
6852
6854
6856
6858
6860
6862
6864
6866
6868
6870
6872
6874
6876
6878
6880
6882
6884
6886
6888
6890
6892
6894
6896
6898
6900
6902
6904
6906
6908
6910
6912
6914
6916
6918
6920
6922
6924
6926
6928
6930
6932
6934
6936
6938
6940
6942
6944
6946
6948
6950
6952
6954
6956
6958
6960
6962
6964
6966
6968
6970
6972
6974
6976
6978
6980
6982
6984
6986
6988
6990
6992
6994
6996
6998
7000
7002
7004
7006
7008
7010
7012
7014
7016
7018
7020
7022
7024
7026
7028
7030
7032
7034
7036
7038
7040
7042
7044
7046
7048
7050
7052
7054
7056
7058
7060
7062
7064
7066
7068
7070
7072
7074
7076
7078
7080
7082
7084
7086
7088
7090
7092
7094
7096
7098
7100
7102
7104
7106
7108
7110
7112
7114
7116
7118
7120
7122
7124
7126
7128
7130
7132
7134
7136
7138
7140
7142
7144
7146
7148
7150
7152
7154
7156
7158
7160
7162
7164
7166
7168
7170
7172
7174
7176
7178
7180
7182
7184
7186
7188
7190
7192
7194
7196
7198
7200
7202
7204
7206
7208
7210
7212
7214
7216
7218
7220
7222
7224
7226
7228
7230
7232
7234
7236
7238
7240
7242
7244
7246
7248
7250
7252
7254
7256
7258
7260
7262
7264
7266
7268
7270
7272
7274
7276
7278
7280
7282
7284
7286
7288
7290
7292
7294
7296
7298
7300
7302
7304
7306
7308
7310
7312
7314
7316
7318
7320
7322
7324
7326
7328
7330
7332
7334
7336
7338
7340
7342
7344
7346
7348
7350
7352
7354
7356
7358
7360
7362
7364
7366
7368
7370
7372
7374
7376
7378
7380
7382
7384
7386
7388
7390
7392
7394
7396
7398
7400
7402
7404
7406
7408
7410
7412
7414
7416
7418
7420
7422
7424
7426
7428
7430
7432
7434
7436
7438
7440
7442
7444
7446
7448
7450
7452
7454
7456
7458
7460
7462
7464
7466
7468
7470
7472
7474
7476
7478
7480
7482
7484
7486
7488
7490
7492
7494
7496
7498
7500
7502
7504
7506
7508
7510
7512
7514
7516
7518
7520
7522
7524
7526
7528
7530
7532
7534
7536
7538
7540
7542
7544
7546
7548
7550
7552
7554
7556
7558
7560
7562
7564
7566
7568
7570
7572
7574
7576
7578
7580
7582
7584
7586
7588
7590
7592
7594
7596
7598
7600
7602
7604
7606
7608
7610
7612
7614
7616
7618
7620
7622
7624
7626
7628
7630
7632
7634
7636
7638
7640
7642
7644
7646
7648
7650
7652
7654
7656
7658
7660
7662
7664
7666
7668
7670
7672
7674
7676
7678
7680
7682
7684
7686
7688
7690
7692
7694
7696
7698
7700
7702
7704
7706
7708
7710
7712
7714
7716
7718
7720
7722
7724
7726
7728
7730
7732
7734
7736
7738
7740
7742
7744
7746
7748
7750
7752
7754
7756
7758
7760
7762
7764
7766
7768
7770
7772
7774
7776
7778
7780
7782
7784
7786
7788
7790
7792
7794
7796
7798
7800
7802
7804
7806
7808
7810
7812
7814
7816
7818
7820
7822
7824
7826
7828
7830
7832
7834
7836
7838
7840
7842
7844
7846
7848
7850
7852
7854
7856
7858
7860
7862
7864
7866
7868
7870
7872
7874
7876
7878
7880
7882
7884
7886
7888
7890
7892
7894
7896
7898
7900
7902
7904
7906
7908
7910
7912
7914
7916
7918
7920
7922
7924
7926
7928
7930
7932
7934
7936
7938
7940
7942
7944
7946
7948
7950
7952
7954
7956
7958
7960
7962
7964
7966
7968
7970
7972
7974
7976
7978
7980
7982
7984
7986
7988
7990
7992
7994
7996
7998
8000
8002
8004
8006
8008
8010
8012
8014
8016
8018
8020
8022
8024
8026
8028
8030
8032
8034
8036
8038
8040
8042
8044
8046
8048
8050
8052
8054
8056
8058
8060
8062
8064
8066
8068
8070
8072
8074
8076
8078
8080
8082
8084
8086
8088
8090
8092
8094
8096
8098
8100
8102
8104
8106
8108
8110
8112
8114
8116
8118
8120
8122
8124
8126
8128
8130
8132
8134
8136
8138
8140
8142
8144
8146
8148
8150
8152
8154
8156
8158
8160
8162
8164
8166
8168
8170
8172
8174
8176
8178
8180
8182
8184
8186
8188
8190
8192
8194
8196
8198
8200
8202
8204
8206
8208
8210
8212
8214
8216
8218
8220
8222
8224
8226
8228
8230
8232
8234
8236
8238
8240
8242
8244
8246
8248
8250
8252
8254
8256
8258
8260
8262
8264
8266
8268
8270
8272
8274
8276
8278
8280
8282
8284
8286
8288
8290
8292
8294
8296
8298
8300
8302
8304
8306
8308
8310
8312
8314
8316
8318
8320
8322
8324
8326
8328
8330
8332
8334
8336
8338
8340
8342
8344
8346
8348
8350
8352
8354
8356
8358
8360
8362
8364
8366
8368
8370
8372
8374
8376
8378
8380
8382
8384
8386
8388
8390
8392
8394
8396
8398
8400
8402
8404
8406
8408
8410
8412
8414
8416
8418
8420
8422
8424
8426
8428
8430
8432
8434
8436
8438
8440
8442
8444
8446
8448
8450
8452
8454
8456
8458
8460
8462
8464
8466
8468
8470
8472
8474
8476
8478
8480
8482
8484
8486
8488
8490
8492
8494
8496
8498
8500
8502
8504
8506
8508
8510
8512
8514
8516
8518
8520
8522
8524
8526
8528
8530
8532
8534
8536
8538
8540
8542
8544
8546
8548
8550
8552
8554
8556
8558
8560
8562
8564
8566
8568
8570
8572
8574
8576
8578
8580
8582
8584
8586
8588
8590
8592
8594
8596
8598
8600
8602
8604
8606
8608
8610
8612
8614
8616
8618
8620
8622
8624
8626
8628
8630
8632
8634
8636
8638
8640
8642
8644
8646
8648
8650
8652
8654
8656
8658
8660
8662
8664
8666
8668
8670
8672
8674
8676
8678
8680
8682
8684
8686
8688
8690
8692
8694
8696
8698
8700
8702
8704
8706
8708
8710
8712
8714
8716
8718
8720
8722
8724
8726
8728
8730
8732
8734
8736
8738
8740
8742
8744
8746
8748
8750
8752
8754
8756
8758
8760
8762
8764
8766
8768
8770
8772
8774
8776
8778
8780
8782
8784
8786
8788
8790
8792
8794
8796
8798
8800
8802
8804
8806
8808
8810
8812
8814
8816
8818
8820
8822
8824
8826
8828
8830
8832
8834
8836
8838
8840
8842
8844
8846
8848
8850
8852
8854
8856
8858
8860
8862
8864
8866
8868
8870
8872
8874
8876
8878
8880
8882
8884
8886
8888
8890
8892
8894
8896
8898
8900
8902
8904
8906
8908
8910
8912
8914
8916
8918
8920
8922
8924
8926
8928
8930
8932
8934
8936
8938
8940
8942
8944
8946
8948
8950
8952
8954
8956
8958
8960
8962
8964
8966
8968
8970
8972
8974
8976
8978
8980
8982
8984
8986
8988
8990
8992
8994
8996
8998
9000
9002
9004
9006
9008
9010
9012
9014
9016
9018
9020
9022
9024
9026
9028
9030
9032
9034
9036
9038
9040
9042
9044
9046
9048
9050
9052
9054
9056
9058
9060
9062
9064
9066
9068
9070
9072
9074
9076
9078
9080
9082
9084
9086
9088
9090
9092
9094
9096
9098
9100
9102
9104
9106
9108
9110
9112
9114
9116
9118
9120
9122
9124
9126
9128
9130
9132
9134
9136
9138
9140
9142
9144
9146
9148
9150
9152
9154
9156
9158
9160
9162
9164
9166
9168
9170
9172
9174
9176
9178
9180
9182
9184
9186
9188
9190
9192
9194
9196
9198
9200
9202
9204
9206
9208
9210
9212
9214
9216
9218
9220
9222
9224
9226
9228
9230
9232
9234
9236
9238
9240
9242
9244
9246
9248
9250
9252
9254
9256
9258
9260
9262
9264
9266
9268
9270
9272
9274
9276
9278
9280
9282
9284
9286
9288
9290
9292
9294
9296
9298
9300
9302
9304
9306
9308
9310
9312
9314
9316
9318
9320
9322
9324
9326
9328
9330
9332
9334
9336
9338
9340
9342
9344
9346
9348
9350
9352
9354
9356
9358
9360
9362
9364
9366
9368
9370
9372
9374
9376
9378
9380
9382
9384
9386
9388
9390
9392
9394
9396
9398
9400
9402
9404
9406
9408
9410
9412
9414
9416
9418
9420
9422
9424
9426
9428
9430
9432
9434
9436
9438
9440
9442
9444
9446
9448
9450
9452
9454
9456
9458
9460
9462
9464
9466
9468
9470
9472
9474
9476
9478
9480
9482
9484
9486
9488
9490
9492
9494
9496
9498
9500
9502
9504
9506
9508
9510
9512
9514
9516
9518
9520
9522
9524
9526
9528
9530
9532
9534
9536
9538
9540
9542
9544
9546
9548
9550
9552
9554
9556
9558
9560
9562
9564
9566
9568
9570
9572
9574
9576
9578
9580
9582
9584
9586
9588
9590
9592
9594
9596
9598
9600
9602
9604
9606
9608
9610
9612
9614
9616
9618
9620
9622
9624
9626
9628
9630
9632
9634
9636
9638
9640
9642
9644
9646
9648
9650
9652
9654
9656
9658
9660
9662
9664
9666
9668
9670
9672
9674
9676
9678
9680
9682
9684
9686
9688
9690
9692
9694
9696
9698
9700
9702
9704
9706
9708
9710
9712
9714
9716
9718
9720
9722
9724
9726
9728
9730
9732
9734
9736
9738
9740
9742
9744
9746
9748
9750
9752
9754
9756
9758
9760
9762
9764
9766
9768
9770
9772
9774
9776
9778
9780
9782
9784
9786
9788
9790
9792
9794
9796
9798
9800
9802
9804
9806
9808
9810
9812
9814
9816
9818
9820
9822
9824
9826
9828
9830
9832
9834
9836
9838
9840
9842
9844
9846
9848
9850
9852
9854
9856
9858
9860
9862
9864
9866
9868
9870
9872
9874
9876
9878
9880
9882
9884
9886
9888
9890
9892
9894
9896
9898
9900
9902
9904
9906
9908
9910
9912
9914
9916
9918
9920
9922
9924
9926
9928
9930
9932
9934
9936
9938
9940
9942
9944
9946
9948
9950
9952
9954
9956
9958
9960
9962
9964
9966
9968
9970
9972
9974
9976
9978
9980
9982
9984
9986
9988
9990
9992
9994
9996
9998
10000

FIG. 55C

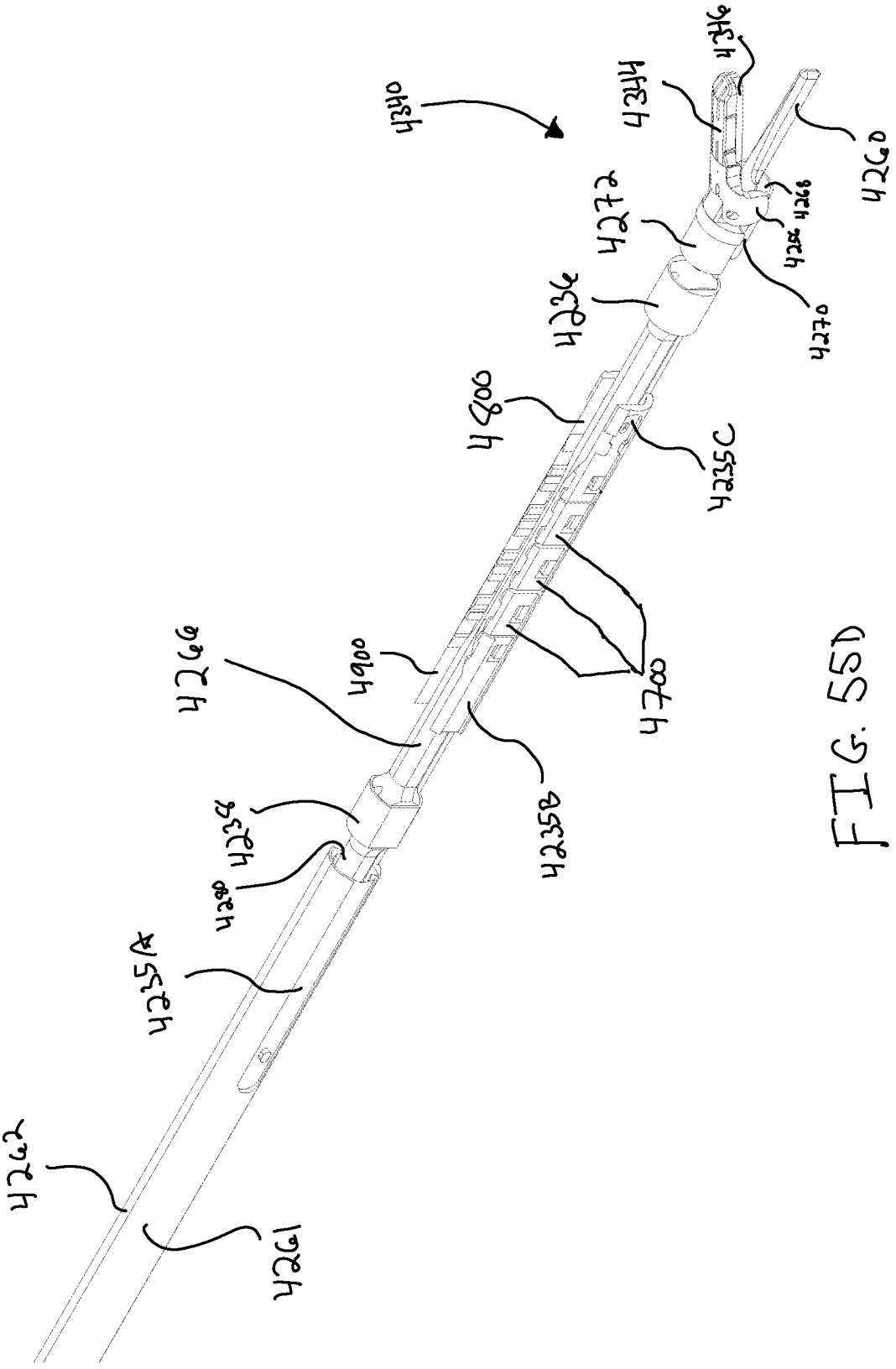
4340
4344
4346
4260
4268
4256
4270
4272
4236
4800
4235C
4700
4900
4266
4235B
4238
4280
4235A
4262
4261

FIG. 55D

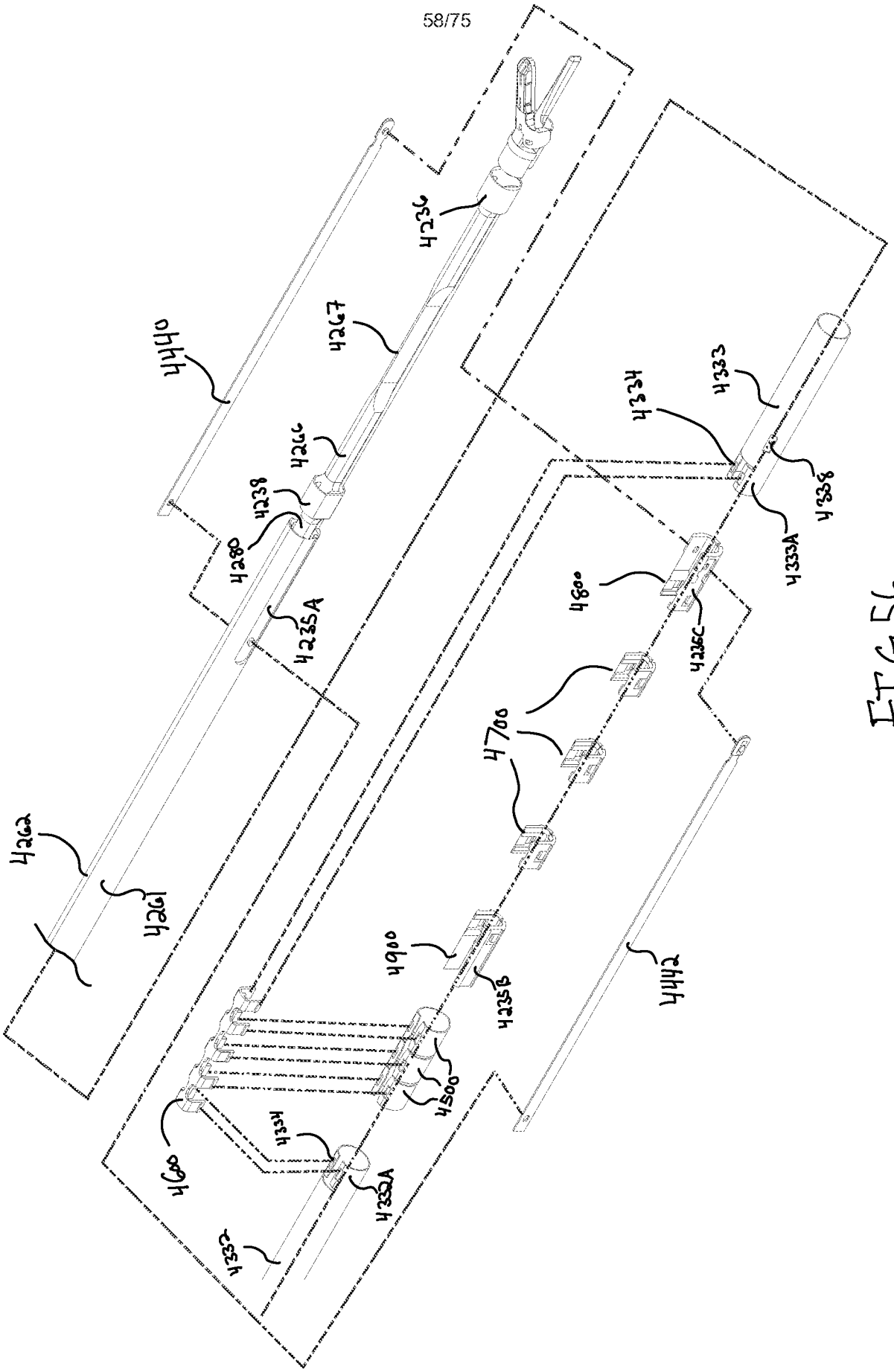
4440
4236
4267
4266
4238
4280
4235A
4262
4261
4333
4334
4338
4333A
4800
4235C
4700
4900
4235B
4500
4442
4600
4334
4332A
4332

FIG.56

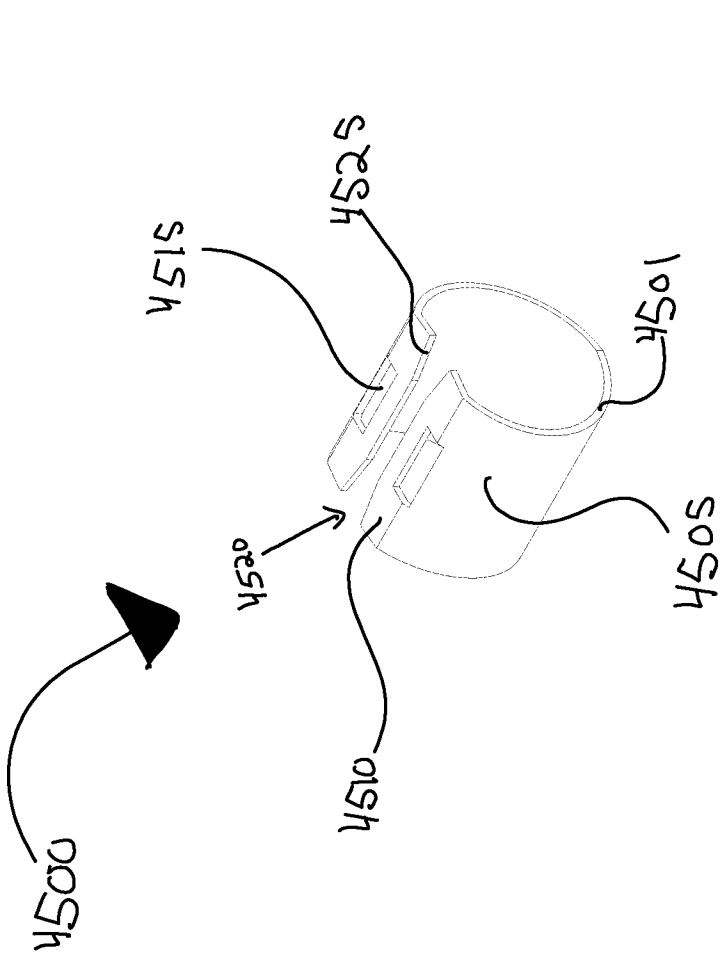

FIG. 57

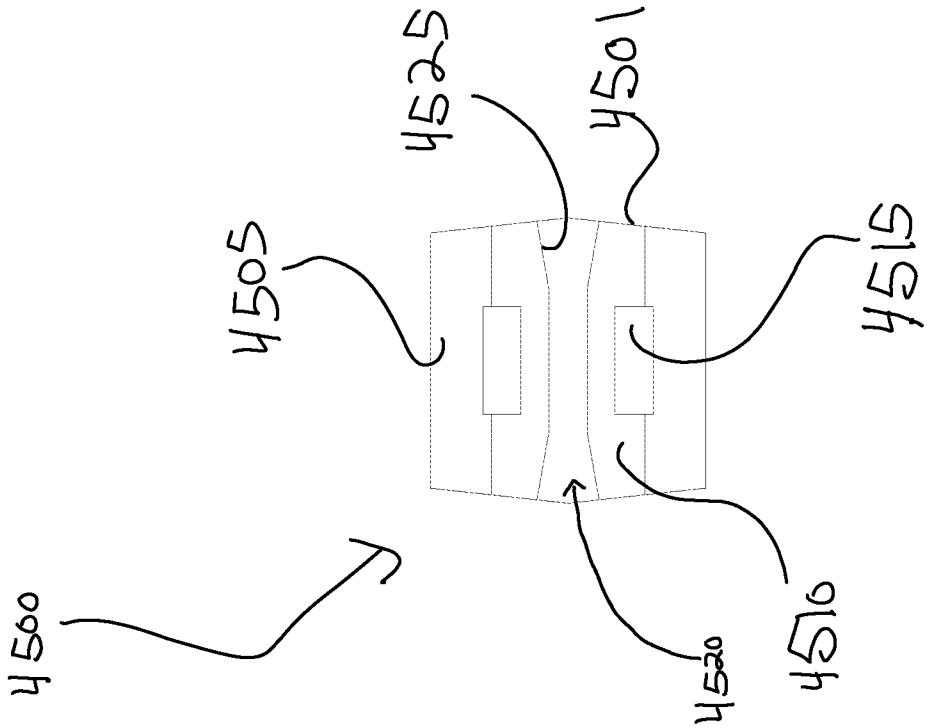

FIG. 58

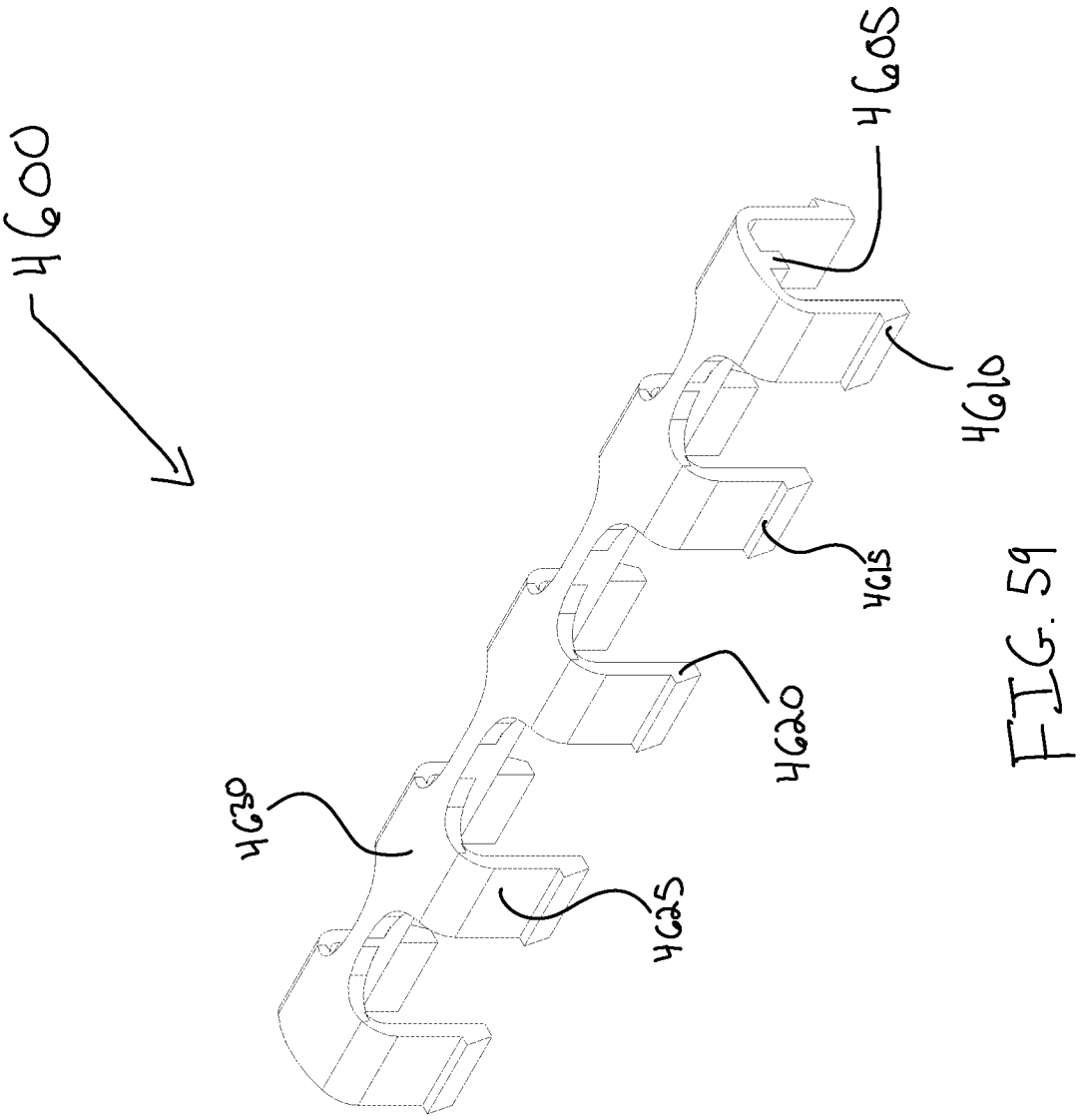

FIG. 59

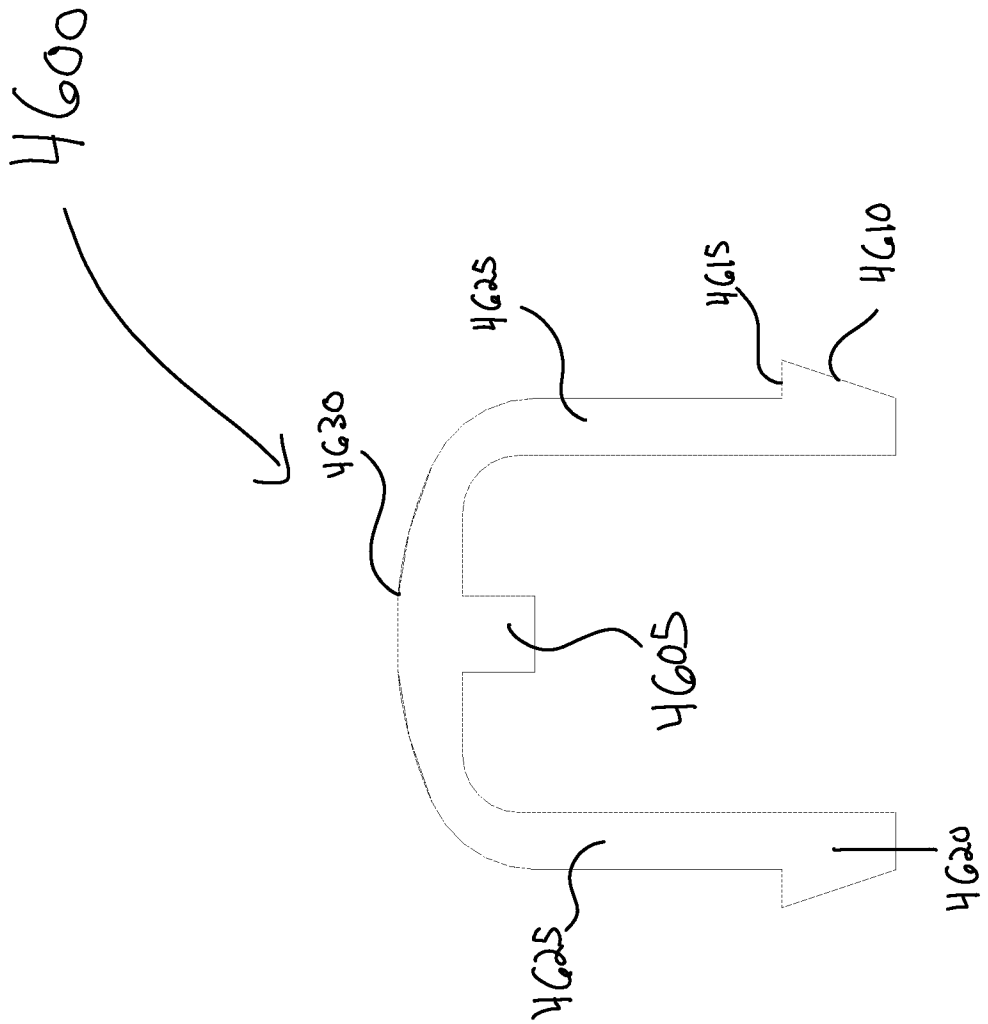

FIG. 60

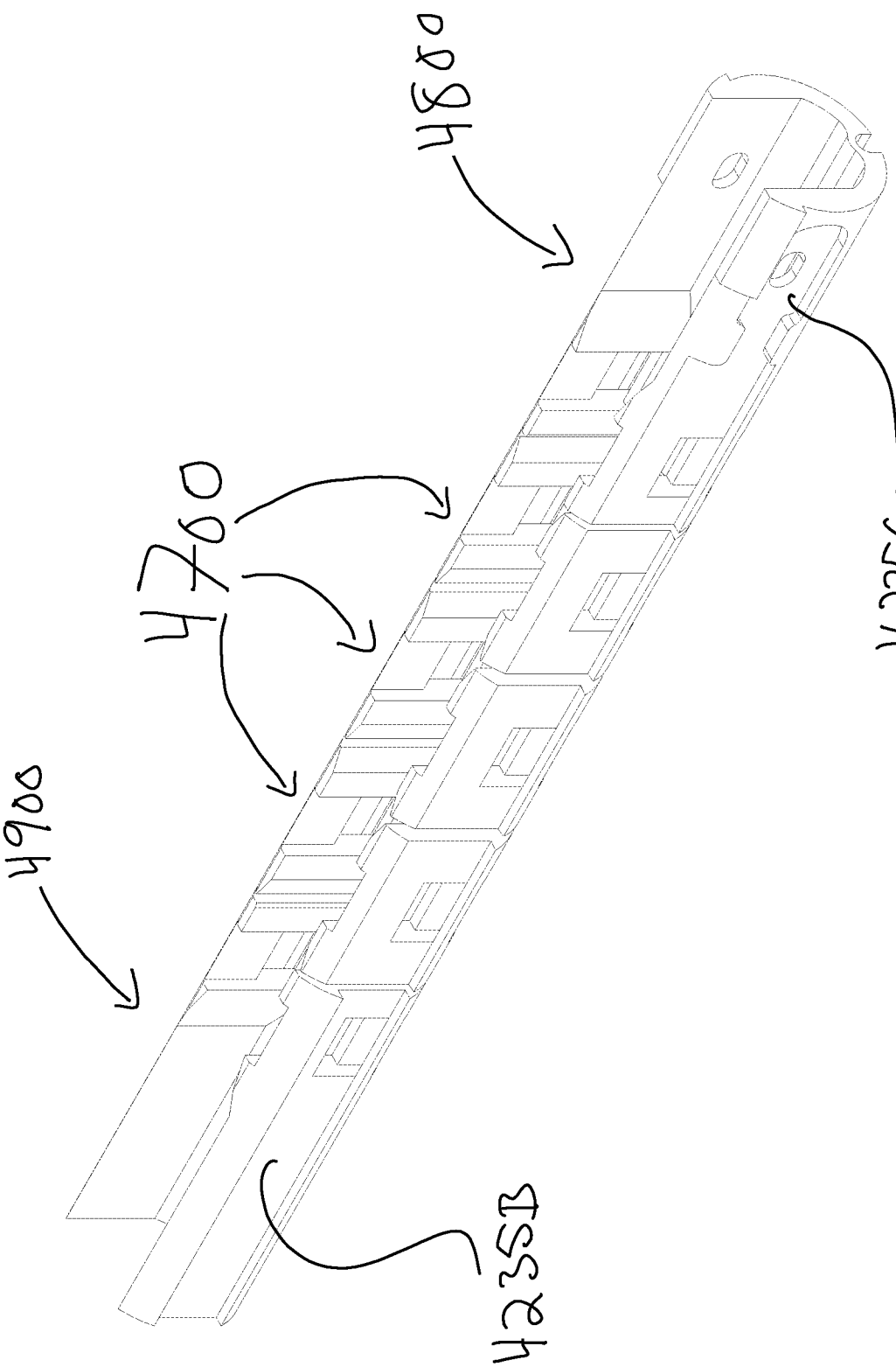

FIG. 61

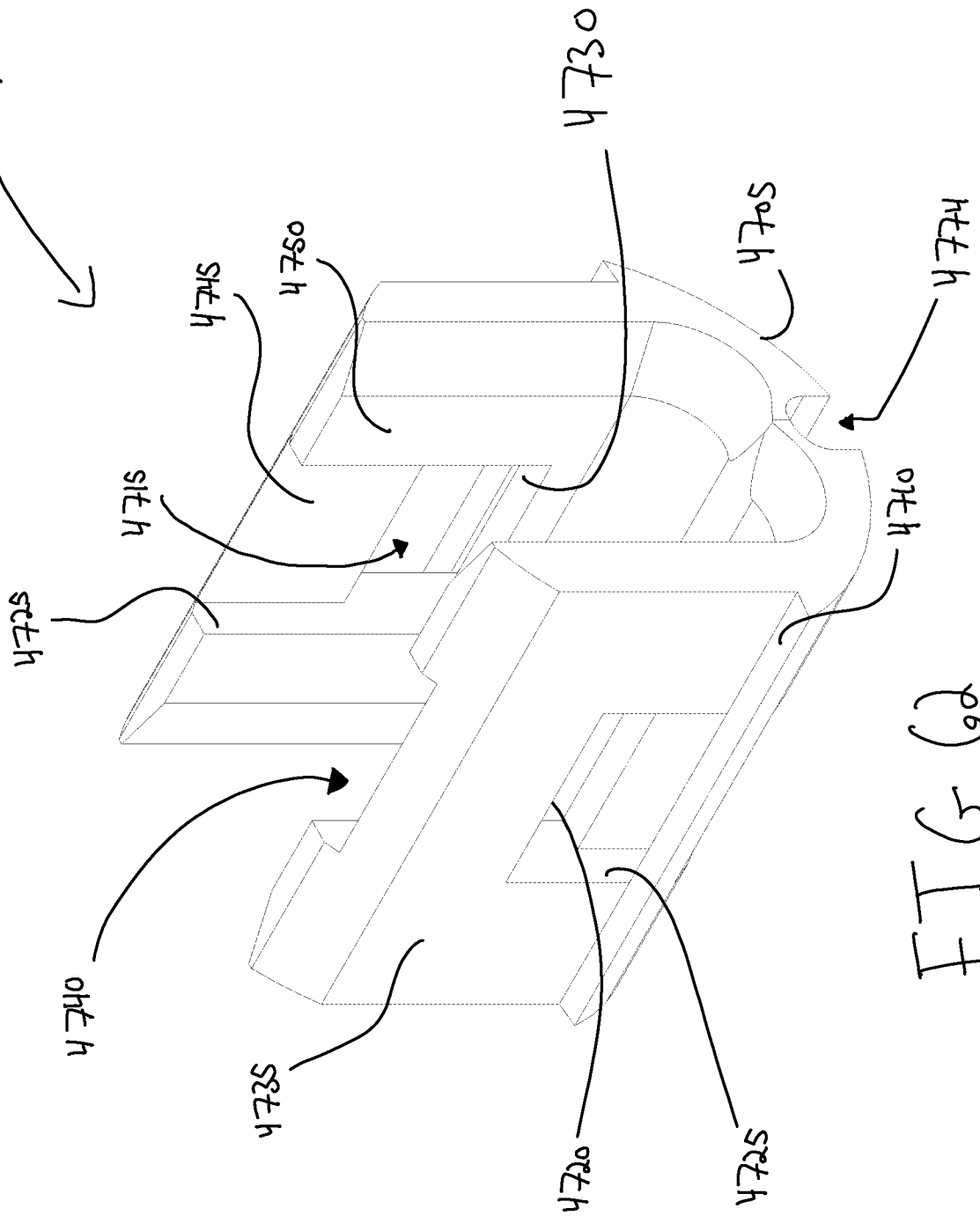
4700
4730
4705
4724
4750
4745
4715
4725
4710
4740
4735
4720
4725

FIG. 6Q

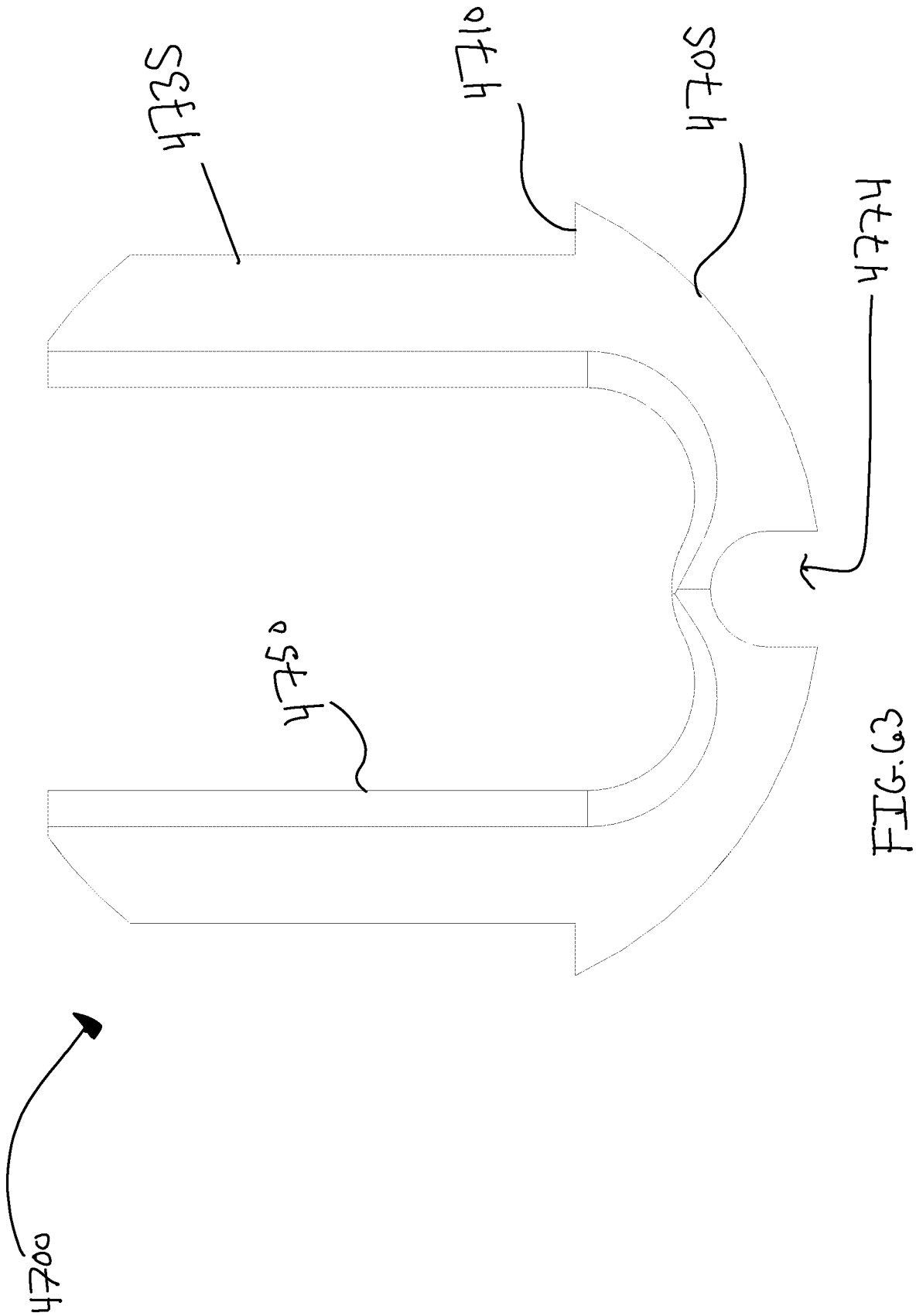

FIG. 63

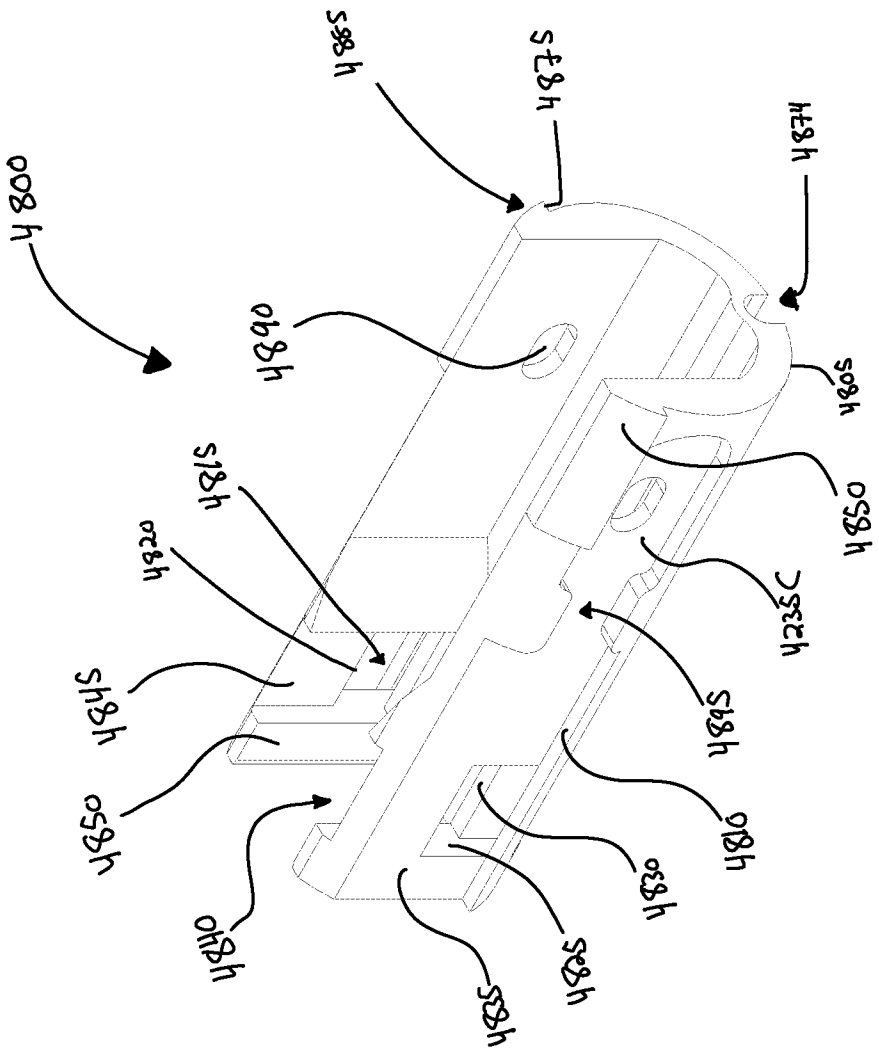
808h
818h
828h
838h
848h
858h
868h
878h
888h
898h
8A8h
8B8h
8C8h
8D8h
8E8h
8F8h
8G8h
8H8h

FIG. 6H

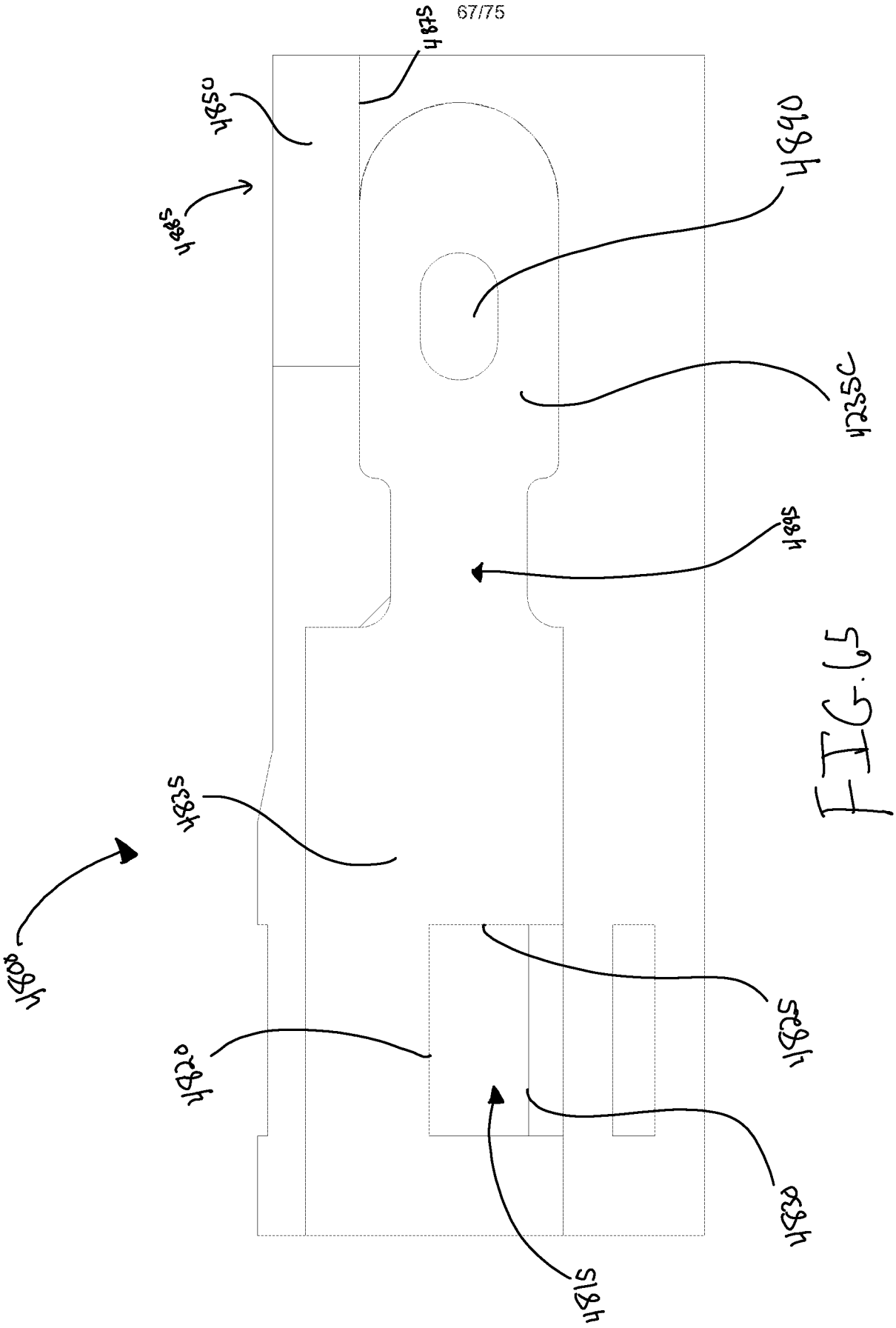

FIG. 65

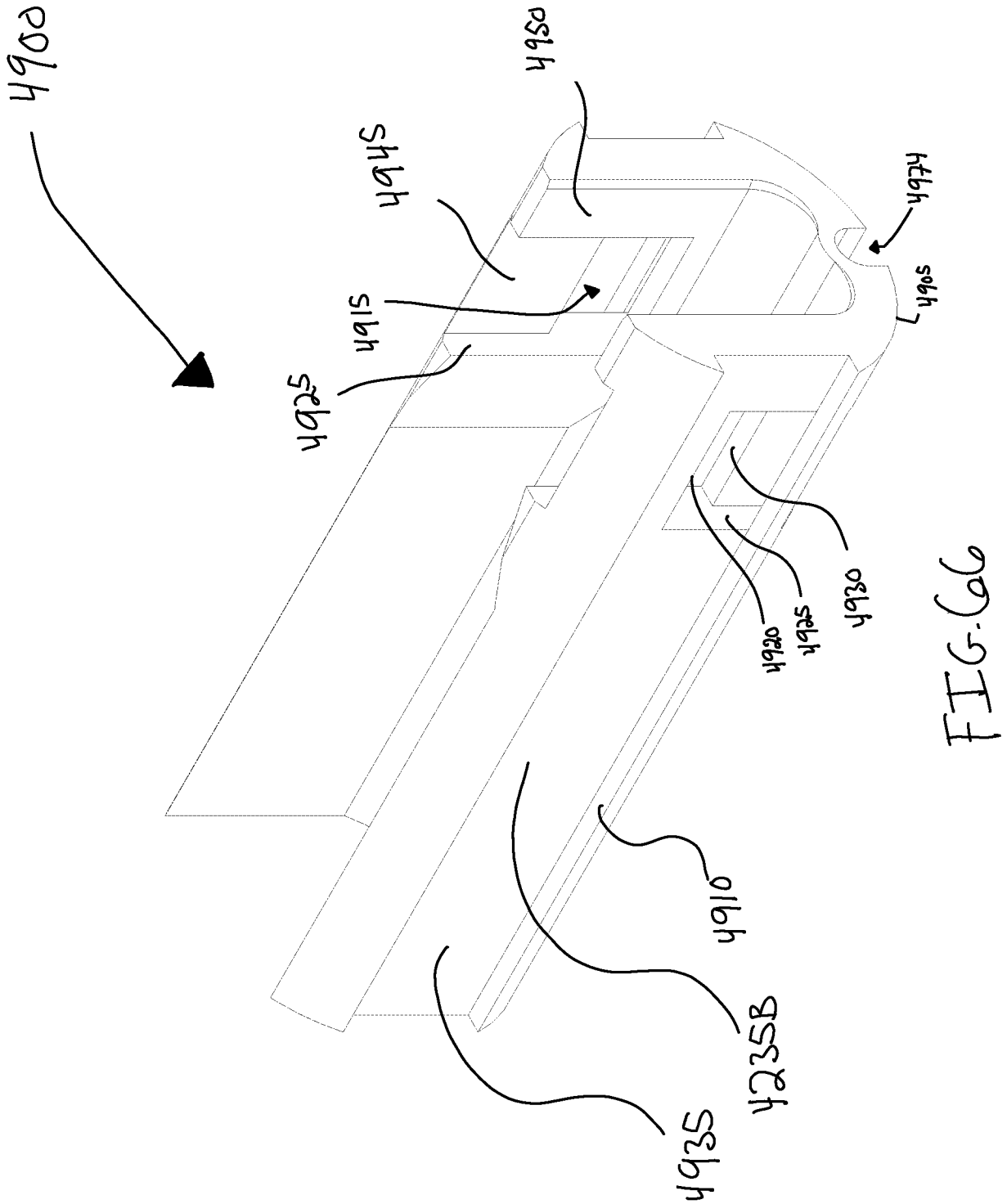
4900
4950
4945
4915
4925
4974
4905
4930
4925
4920
4910
4235B
4935

FIG. 66

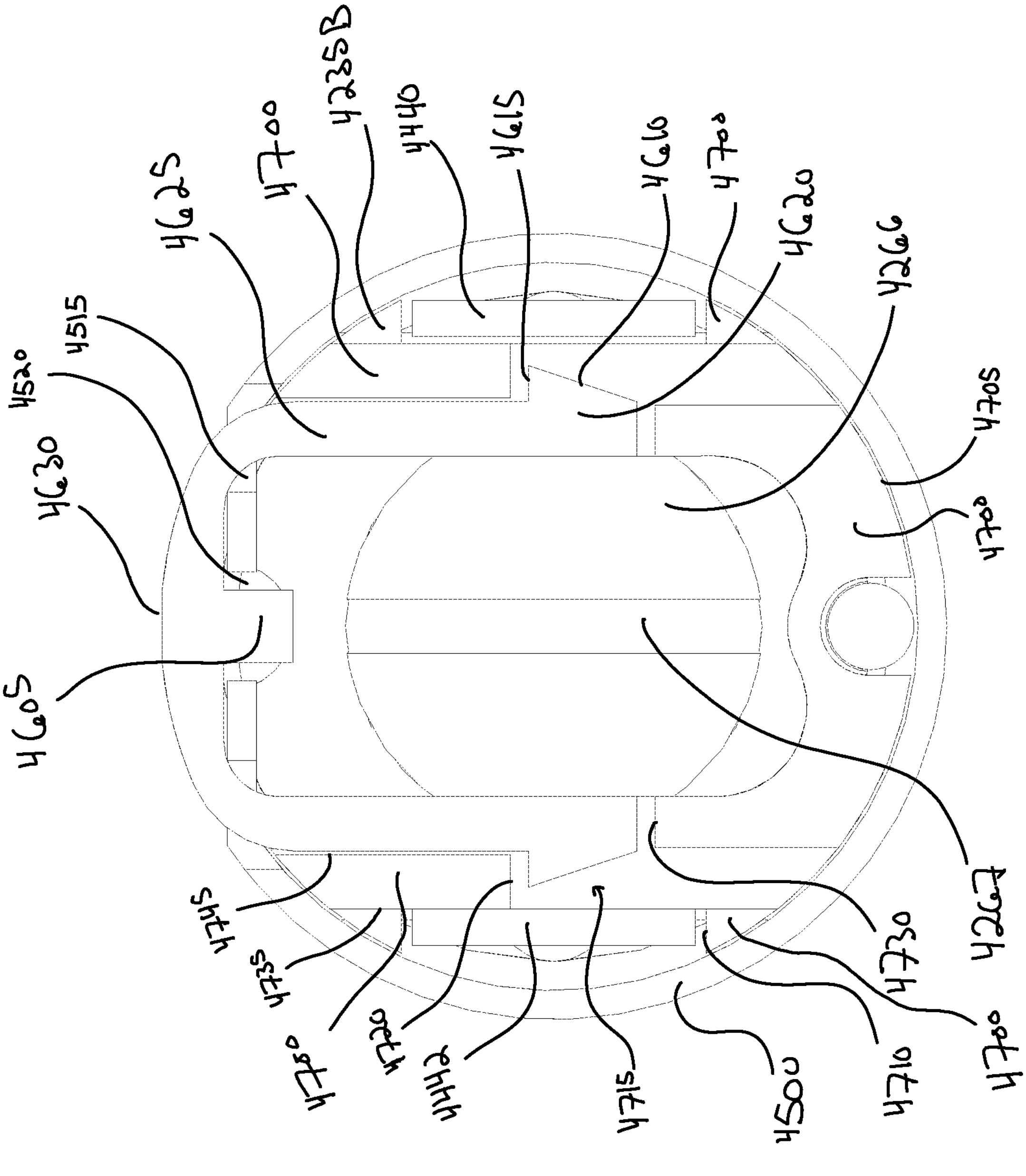
4605
4630
4520
4515
4625
4700
4235B
4440
4615
4610
4620
4266
4705
4267
4730
4710
4500
4515

FIG. 67

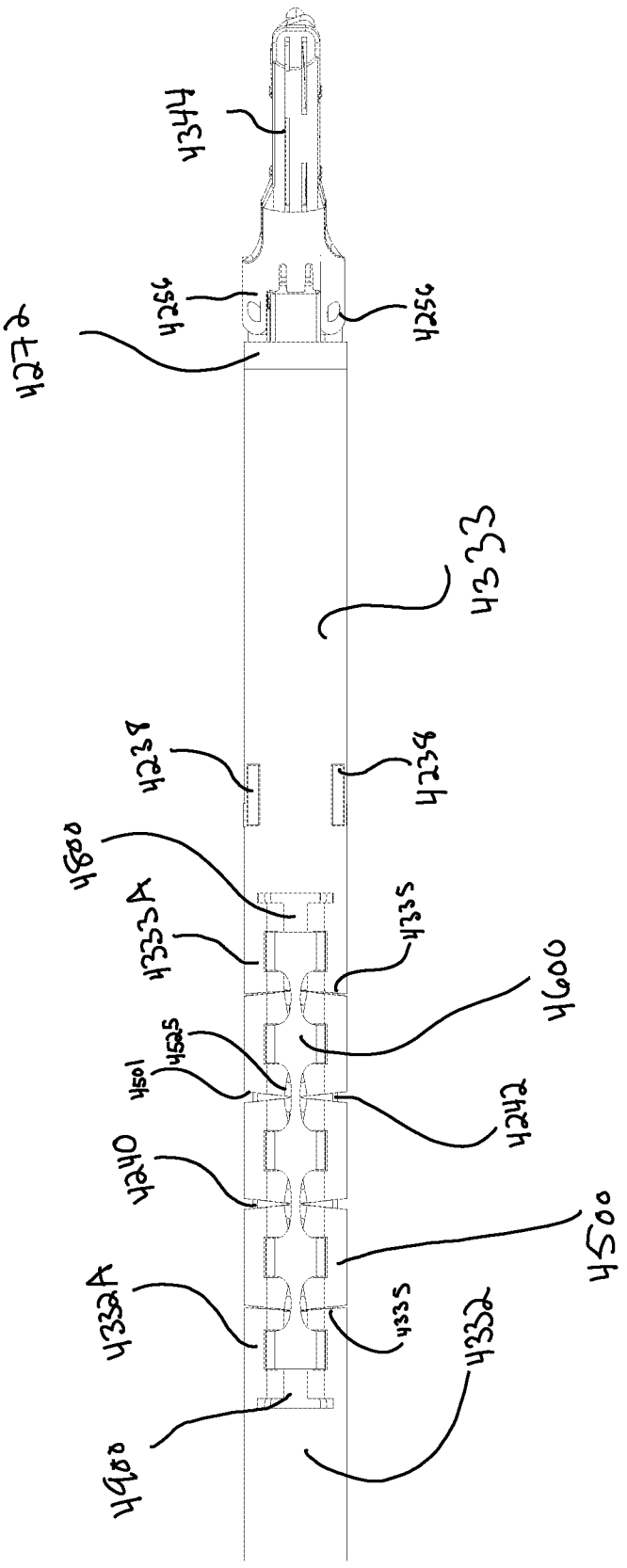
4344
4256
4256
4272
4333
4238
4238
4800
4333A
4335
4600
4525
4501
4242
4240
4500
4332A
4335
4332
4900

FIG. 68

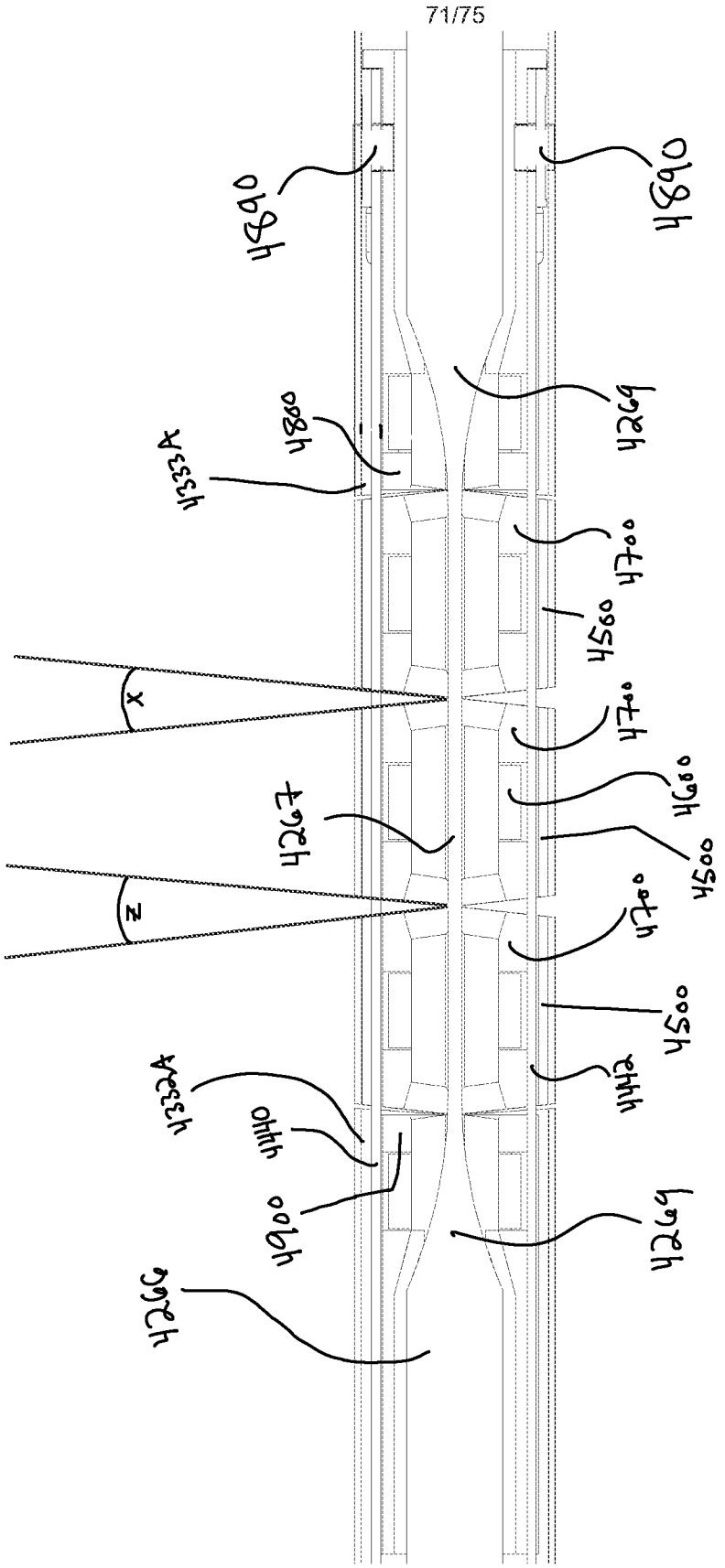

FIG. 69A

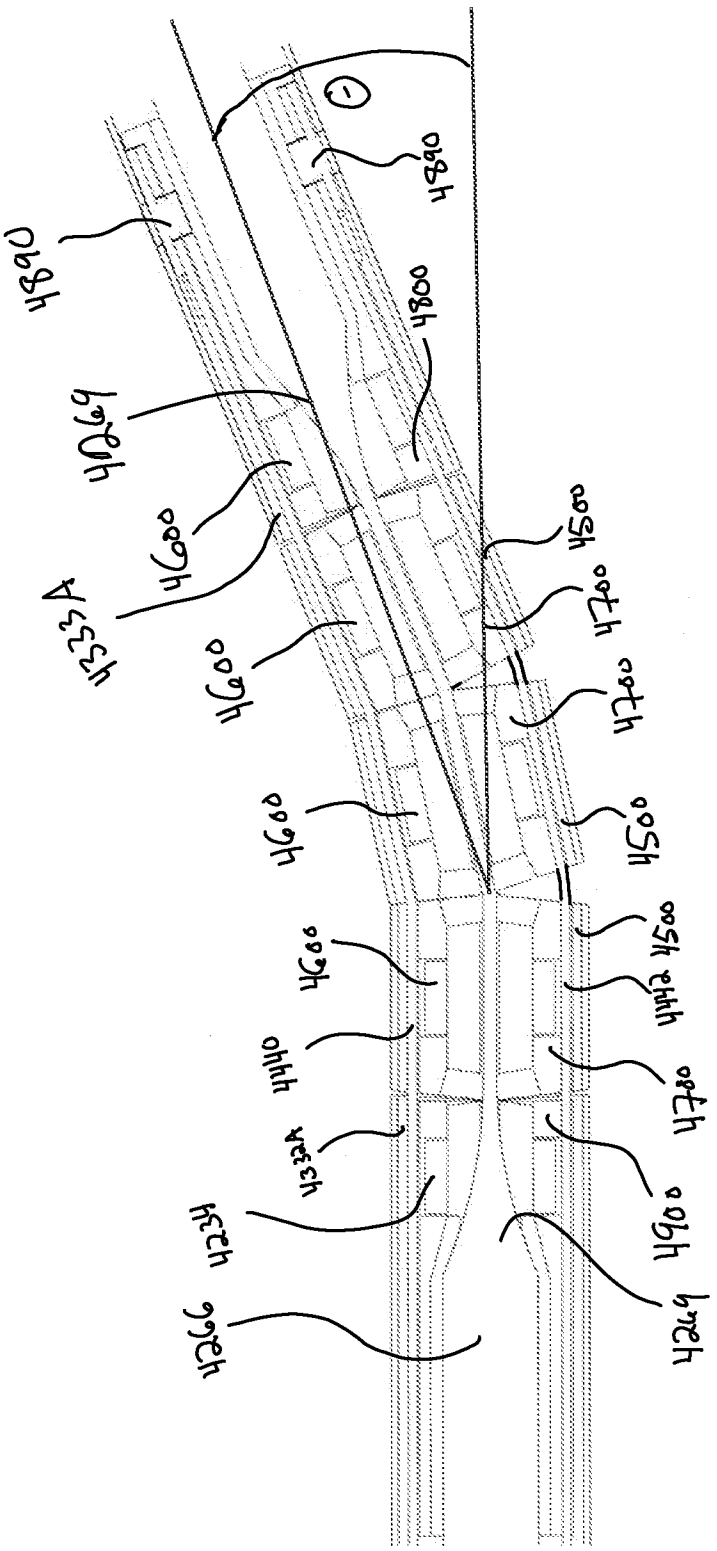
①
0980
0980
0980

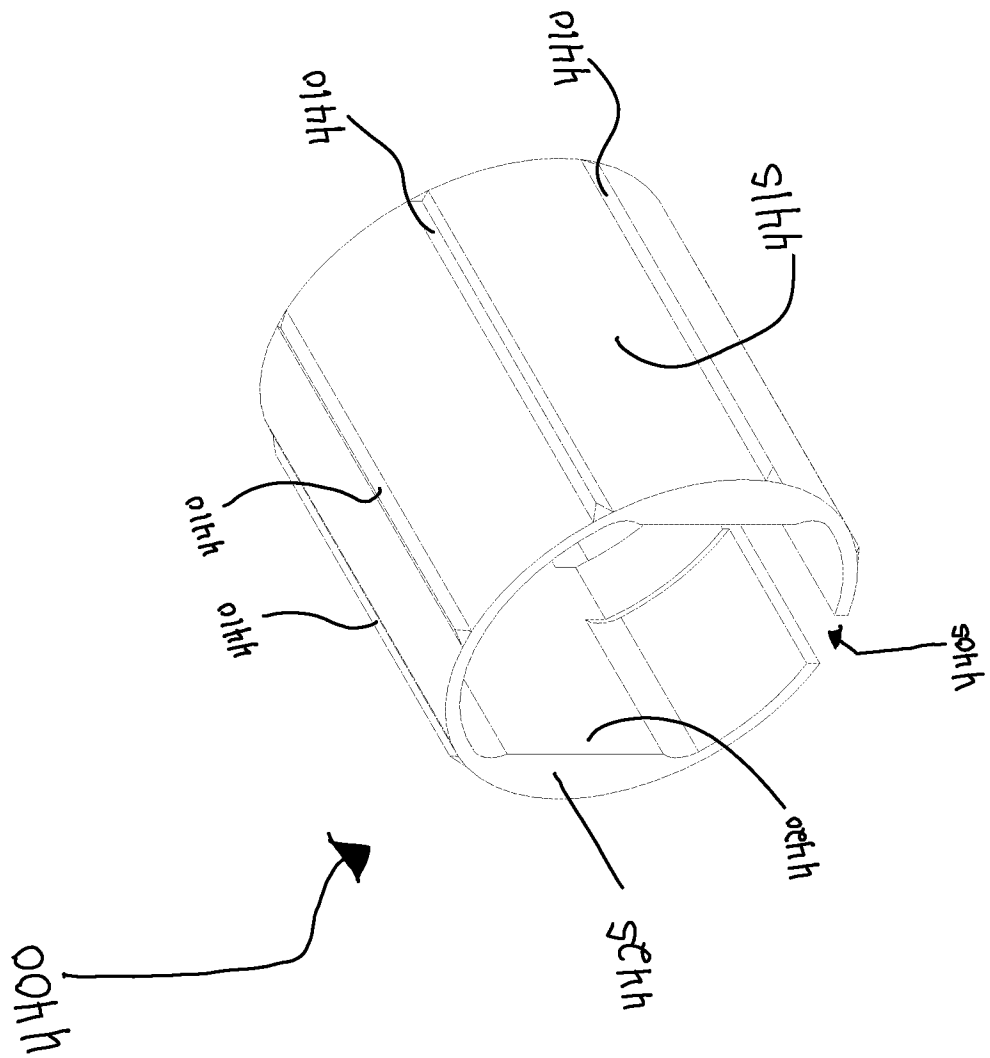

FIG. 7O

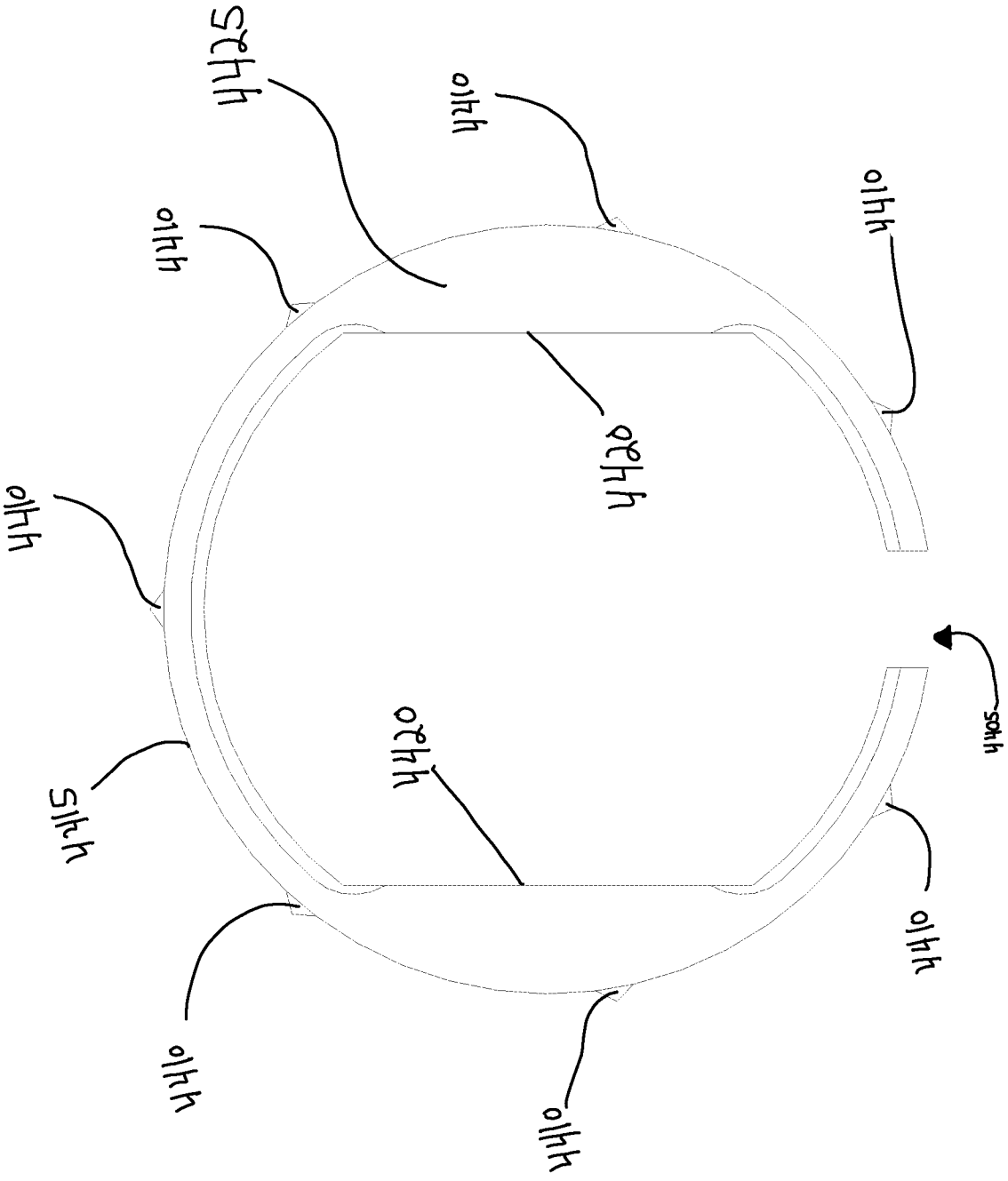

FIG. 71

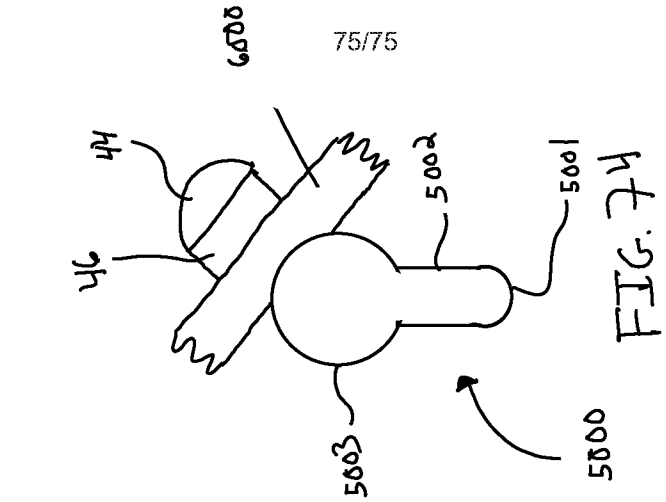

FIG. 74

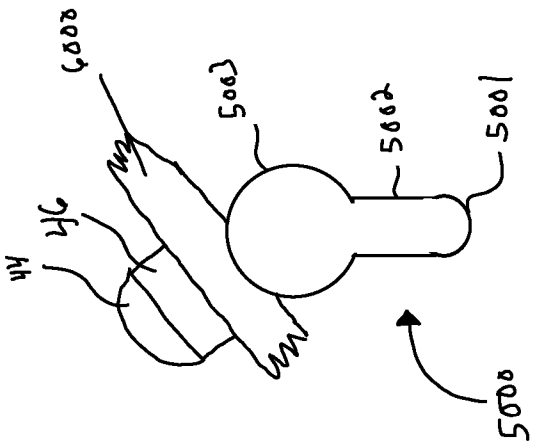

FIG. 73

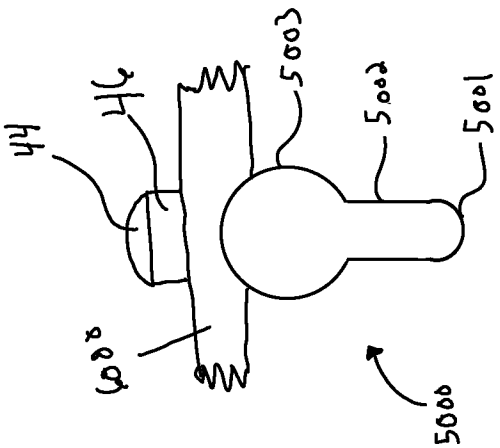

FIG. 72

INTERNATIONAL SEARCH REPORT

International application No
PCT/US2015/026322

A. CLASSIFICATION OF SUBJECT MATTER
INV. A61B17/32
ADD.

According to International Patent Classification (IPC) or to both national classification and IPC

B. FIELDS SEARCHED

Minimum documentation searched (classification system followed by classification symbols)
A61B

Documentation searched other than minimum documentation to the extent that such documents are included in the fields searched

Electronic data base consulted during the international search (name of data base and, where practicable, search terms used)
EPO-Internal

C. DOCUMENTS CONSIDERED TO BE RELEVANT

Category*	Citation of document, with indication, where appropriate, of the relevant passages	Relevant to claim No.
X	US 2014/005703 A1 (STULEN FOSTER B [US] ET AL) 2 January 2014 (2014-01-02)	1-19, 21-35, 39,40
Y	paragraphs [0088], [0187], [0189], [0193]; figures 1,3-5,32,42,60-64	20,36-38
Y	US 2014/005677 A1 (SHELTON IV FREDERICK E [US] ET AL) 2 January 2014 (2014-01-02) paragraph [0283]; figure 57	20,36-38
A	US 2012/078247 A1 (WORRELL BARRY C [US] ET AL) 29 March 2012 (2012-03-29) paragraphs [0060] - [0063]; figure 8	1-40
A	EP 2 668 911 A2 (COVIDIEN LP [US]) 4 December 2013 (2013-12-04) paragraphs [0093], [0094]	1-40

-/--

[X] Further documents are listed in the continuation of Box C.

[X] See patent family annex.

* Special categories of cited documents :

"A" document defining the general state of the art which is not considered to be of particular relevance

"E" earlier application or patent but published on or after the international filing date

"L" document which may throw doubts on priority claim(s) or which is cited to establish the publication date of another citation or other special reason (as specified)

"O" document referring to an oral disclosure, use, exhibition or other means

"P" document published prior to the international filing date but later than the priority date claimed

"T" later document published after the international filing date or priority date and not in conflict with the application but cited to understand the principle or theory underlying the invention

"X" document of particular relevance; the claimed invention cannot be considered novel or cannot be considered to involve an inventive step when the document is taken alone

"Y" document of particular relevance; the claimed invention cannot be considered to involve an inventive step when the document is combined with one or more other such documents, such combination being obvious to a person skilled in the art

"&" document member of the same patent family

Date of the actual completion of the international search	Date of mailing of the international search report
28 May 2015	05/06/2015

Name and mailing address of the ISA/	Authorized officer
European Patent Office, P.B. 5818 Patentlaan 2 NL - 2280 HV Rijswijk Tel. (+31-70) 340-2040, Fax: (+31-70) 340-3016	Lee, Ronan

2

Form PCT/ISA/210 (second sheet) (April 2005)

INTERNATIONAL SEARCH REPORT

International application No
PCT/US2015/026322

C(Continuation). DOCUMENTS CONSIDERED TO BE RELEVANT

Category*	Citation of document, with indication, where appropriate, of the relevant passages	Relevant to claim No.
A	WO 2012/088167 A2 (SPINE VIEW INC) 28 June 2012 (2012-06-28) paragraph [0169]; figure 46 -----	1-40

INTERNATIONAL SEARCH REPORT

Information on patent family members

International application No
PCT/US2015/026322

Patent document cited in search report	Publication date	Patent family member(s)	Publication date
US 2014005703 A1	02-01-2014	CN 104582599 A	29-04-2015
		EP 2866692 A2	06-05-2015
		US 2014005703 A1	02-01-2014
		WO 2014004117 A2	03-01-2014
US 2014005677 A1	02-01-2014	EP 2866720 A2	06-05-2015
		US 2014005677 A1	02-01-2014
		WO 2014004292 A2	03-01-2014
US 2012078247 A1	29-03-2012	AU 2011305403 A1	14-03-2013
		AU 2011305410 A1	14-03-2013
		CA 2811298 A1	29-03-2012
		CA 2811339 A1	29-03-2012
		CN 103118618 A	22-05-2013
		CN 103298425 A	11-09-2013
		EP 2618762 A1	31-07-2013
		EP 2618763 A1	31-07-2013
		JP 2013540004 A	31-10-2013
		JP 2013543393 A	05-12-2013
		KR 20130137175 A	16-12-2013
		KR 20130139934 A	23-12-2013
		US 2012078247 A1	29-03-2012
		US 2012078248 A1	29-03-2012
		WO 2012040438 A1	29-03-2012
		WO 2012040445 A1	29-03-2012
EP 2668911 A2	04-12-2013	AU 2013205875 A1	19-12-2013
		CA 2816279 A1	01-12-2013
		CN 103445817 A	18-12-2013
		EP 2668911 A2	04-12-2013
		JP 2013248394 A	12-12-2013
		US 2013324978 A1	05-12-2013
WO 2012088167 A2	28-06-2012	CN 103501713 A	08-01-2014
		EP 2654583 A2	30-10-2013
		JP 2014506167 A	13-03-2014
		US 2012221007 A1	30-08-2012
		WO 2012088167 A2	28-06-2012