C. J. E. WAXBOM.

GATHERING LOCOMOTIVE.

APPLICATION FILED MAR. 9, 1909.

1,150,911.

Patented Aug. 24, 1915.

5 SHEETS—SHEET 1.

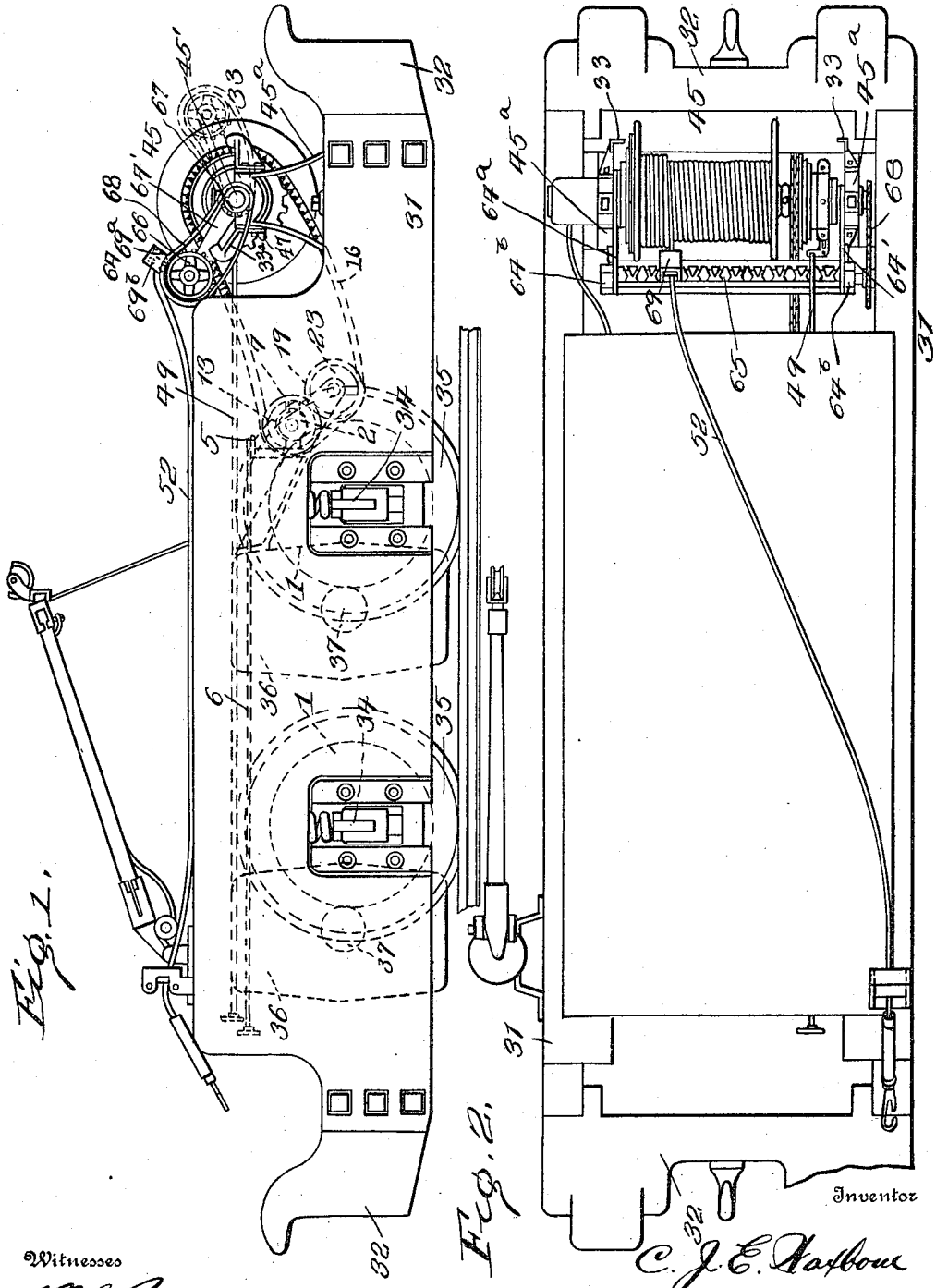

Fig. 1.

Fig. 2.

Witnesses

W. G. Bram

George R. Bliss

Inventor

C. J. E. Waxbom

By

H. H. Bliss

Attorney

COLUMBIA PLANOGRAPH CO., WASHINGTON, D. C.

C. J. E. WAXBOM.

GATHERING LOCOMOTIVE.

APPLICATION FILED MAR. 9, 1909.

1,150,911.

Patented Aug. 24, 1915.

5 SHEETS—SHEET 2.

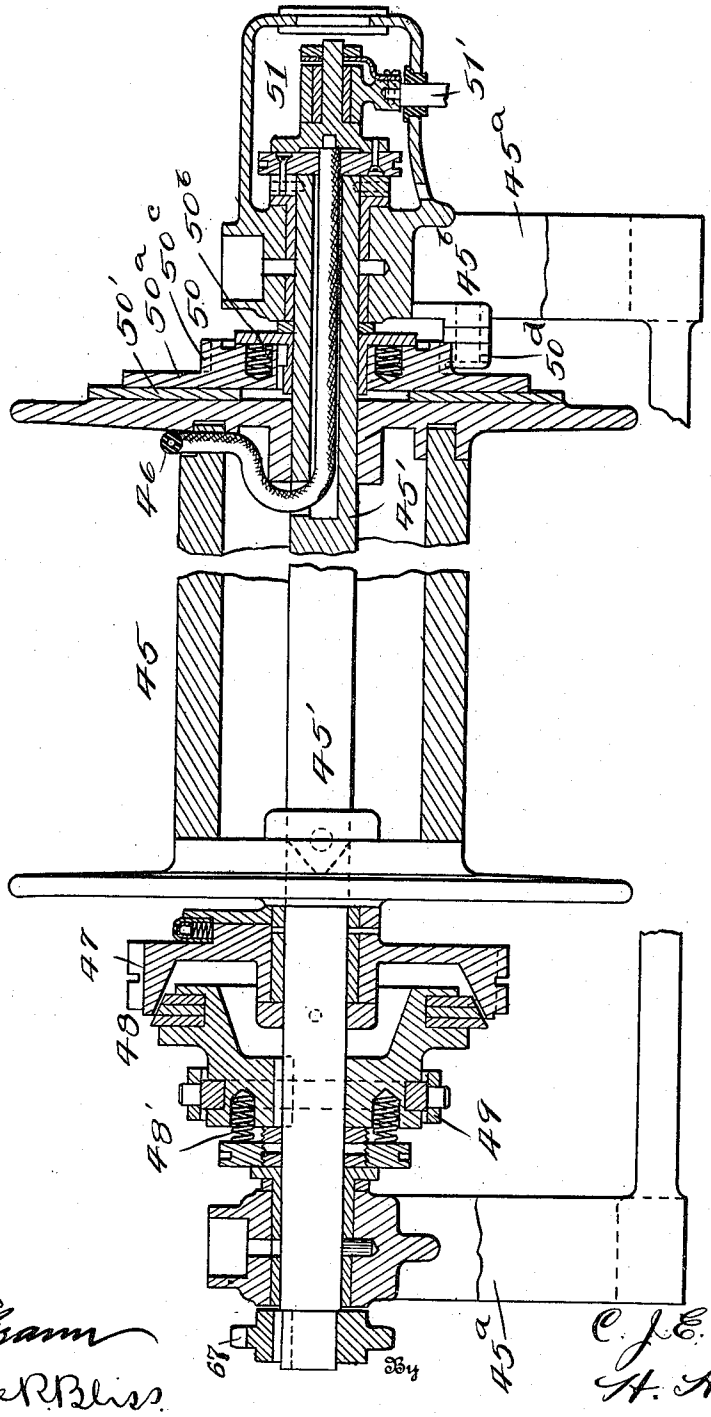

Fig. 3.

Witnesses

[illegible]

George R. Bliss.

Inventor

C. J. E. Waxbom

By H. A. Bliss

Attorney

COLUMBIA PLANOGRAPH CO., WASHINGTON, D. C.

C. J. E. WAXBOM.

GATHERING LOCOMOTIVE.

APPLICATION FILED MAR. 9, 1909.

1,150,911.

Patented Aug. 24, 1915.

5 SHEETS—SHEET 3.

Fig. 4.

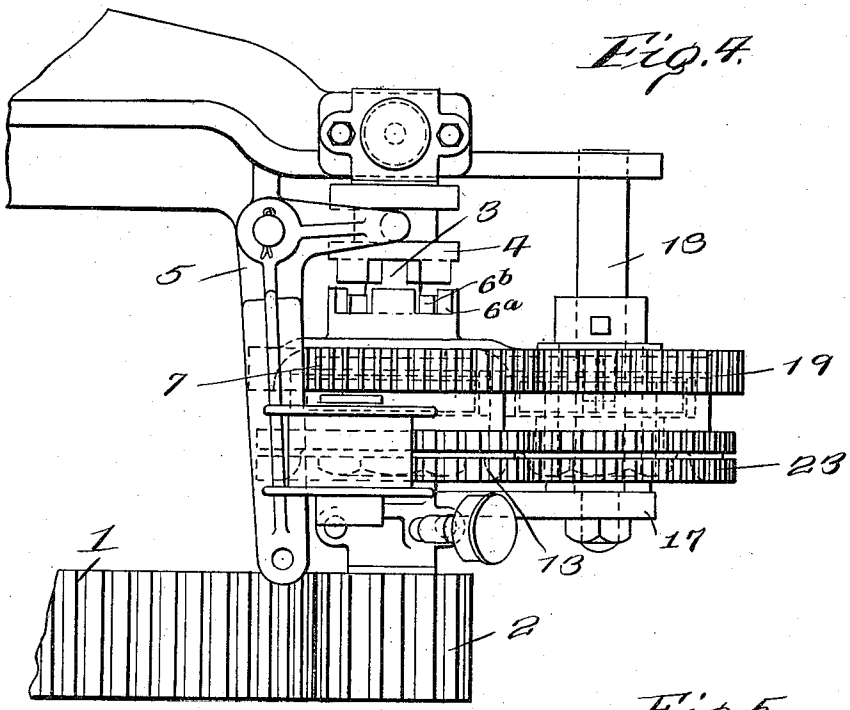

Fig. 5.

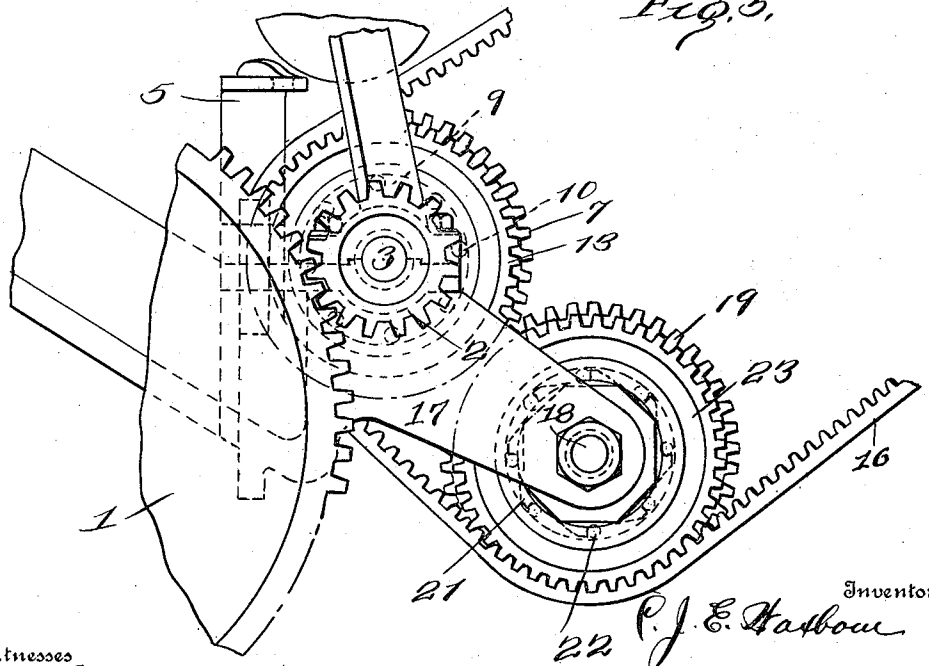

Witnesses

B. J. Brann

George R. Bliss.

Inventor

C. J. E. Waxbom

By H. H. Bliss

Attorney

COLUMBIA PLANOGRAPH CO., WASHINGTON, D. C.

C. J. E. WAXBOM.

GATHERING LOCOMOTIVE.

APPLICATION FILED MAR. 9, 1909.

1,150,911.

Patented Aug. 24, 1915.

5 SHEETS—SHEET 4.

Fig. 6.

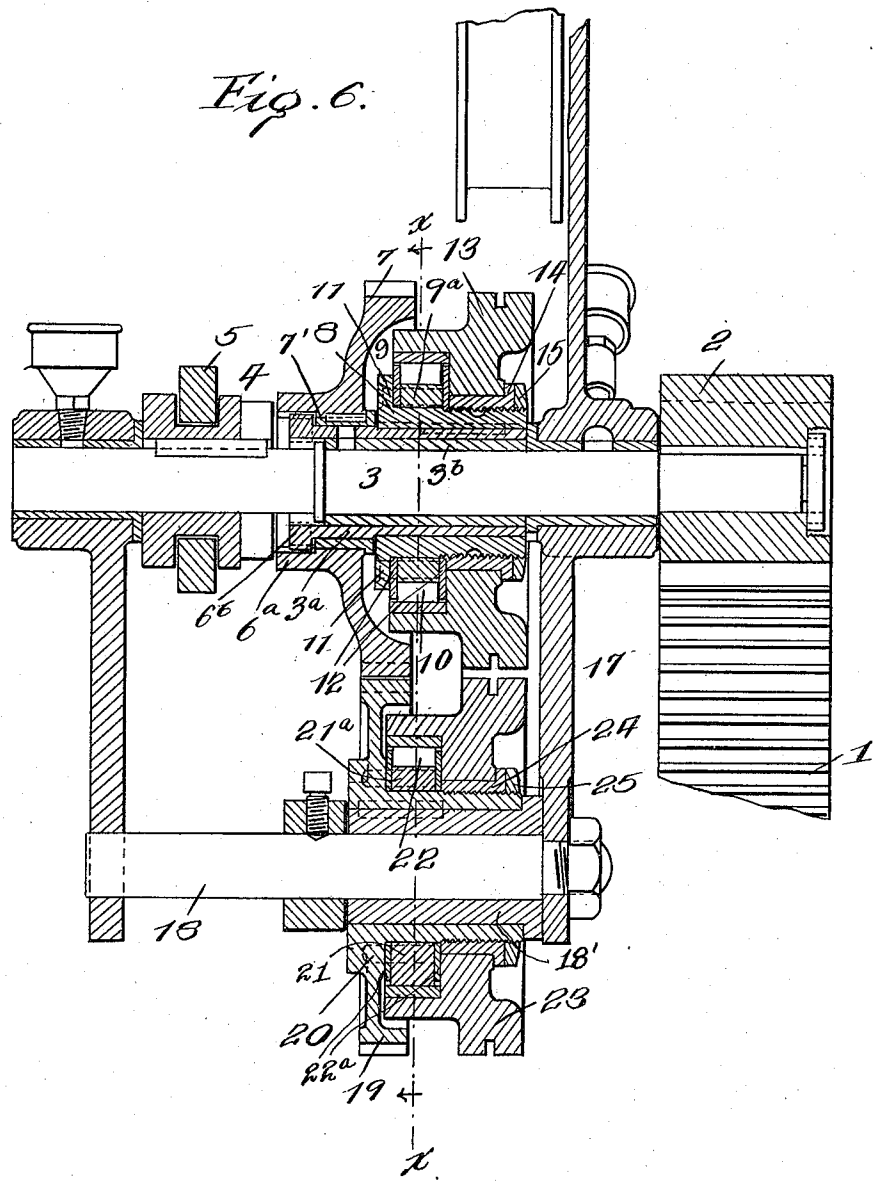

Witnesses

B. J. Dann

George R Bliss

Inventor

C. J. E. Waxbom

By H. A. Bliss

Attorney

COLUMBIA PLANOGRAPH CO., WASHINGTON, D. C.

C. J. E. WAXBOM.

GATHERING LOCOMOTIVE.

APPLICATION FILED MAR. 9, 1909.

1,150,911.

Patented Aug. 24, 1915.

5 SHEETS—SHEET 5.

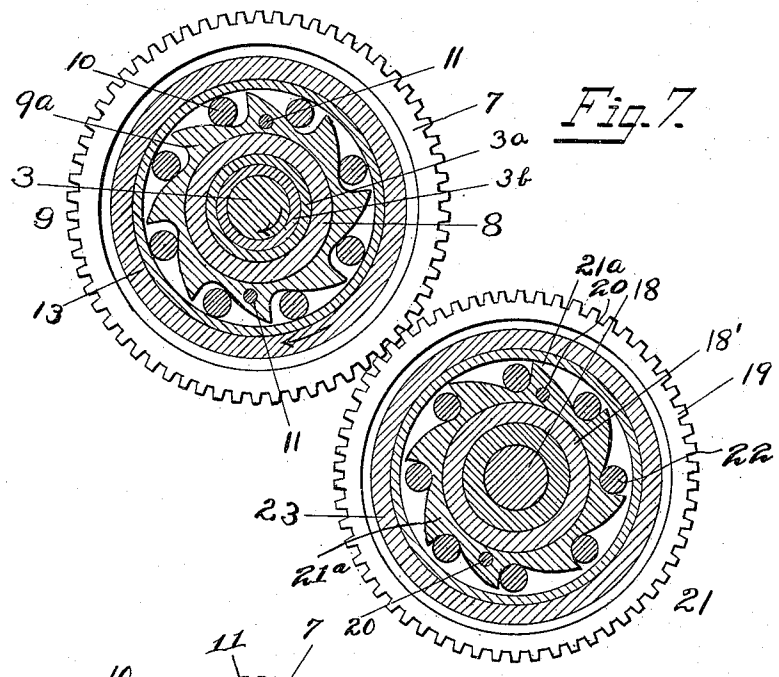

Fig. 7.

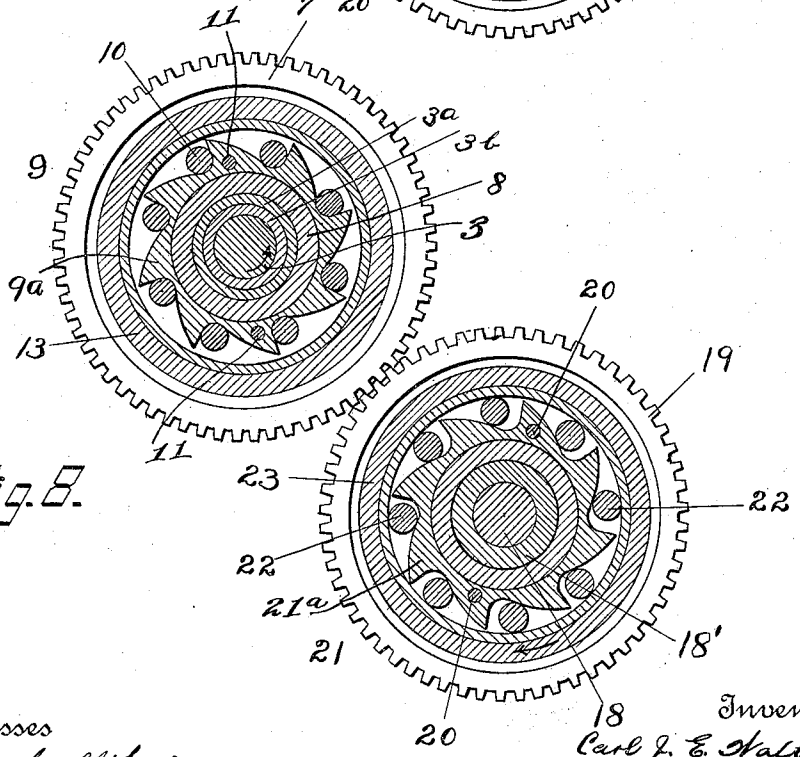

Fig. 8.

Witnesses

Marshall Stow

S. Jay Teller

Inventor

Carl J. E. Waxbom

By N. H. Bliss

Attorney

COLUMBIA PLANOGRAPH CO., WASHINGTON, D. C.

UNITED STATES PATENT OFFICE.

CARL J. EVALD WAXBOM, OF WESTERVILLE, OHIO, ASSIGNOR TO THE JEFFREY MANUFACTURING COMPANY, A CORPORATION OF OHIO.

GATHERING-LOCOMOTIVE.

1,150,911. Specification of Letters Patent. Patented Aug. 24, 1915.

Application filed March 9, 1909. Serial No. 482,309.

To all whom it may concern:

Be it known that I, CARL J. E. WAXBOM, a citizen of the United States, residing at Westerville, in the county of Franklin and State of Ohio, have invented certain new and useful Improvements in Gathering-Locomotives, of which the following is a specification, reference being had therein to the accompanying drawings.

This invention relates to gathering locomotives of the cable reeling type and has as its object the provision of means whereby the motion of the driving gear of the locomotive can be communicated to the cable reeling mechanism with the effect of rotating the cable reeling mechanism always in the same direction irrespective of the direction of the travel of the locomotive, and also to provide in connection with the means for thus driving the cable reeling mechanism, suitable clutches and other controlling devices.

In the drawings, Figure 1 is a side elevation of a locomotive equipped with mechanism conforming to my invention. Fig. 2 is a plan view of the locomotive. Fig. 3 is a vertical axial section of the cable reel and adjacent parts. Fig. 4 is a plan view of the mechanism for transmitting the motion of the driving gear to the cable reel. Fig. 5 is an end elevation of the transmitting mechanism. Fig. 6 is a section taken on the plane through the axes of the two counter shafts of the transmitting mechanism. Fig. 7 is a cross sectional view taken along the line x—x of Fig. 6, with the clutches in the positions which they assume when the locomotive is moving in one direction. Fig. 8 is a view similar to Fig. 7 showing the clutches in the positions which they assume when the locomotive is moving in the other direction.

Gathering locomotives of the type shown in the drawings and described herein are used in mines to collect the loaded cars into trains from the rooms where the coal or ore is being mined and carry them to the mine shaft or the outside as the case may be. Because of the great expense of temporarily providing a trolley wire installation in the rooms themselves, a conductor cable is wound upon a reel carried by the locomotive and the free end is secured to the trolley wire in the entry. When it is desired to run the locomotive into one of the rooms or into a side entry unequipped with a trolley wire, the cable is paid out as the locomotive moves away from the trolley wire and is reeled up as the locomotive returns toward the trolley wire. The reels of such locomotives have been actuated to wind up the cable in a number of different ways; by independent electric motors, by power transmitting gearing connected to the motor for propelling the locomotive with the reel, by spring motors, etc. This invention relates to those locomotives in which the locomotive motor is also used to actuate the reel.

The frame of the locomotive comprising side castings 31—31, and the end castings 32—32, is supported upon axles which rotate in boxes 34—34, and wheels 35—35, which are mounted in the usual manner upon the axles. The motors 36—36 drive the axles, by means of the motor pinions 37—37 and the spur gears 1—1 on the axles. The cable reel 45 is carried by a reel shaft 45′ mounted in suitable bearings in the standards 45^a on the frame of the locomotive, the reel being preferably rigidly secured to the shaft.

47 is a sprocket wheel loosely mounted on the shaft 45′ and through which rotary motion may be imparted for rotating the cable reel 45. Preferably this sprocket wheel has formed integrally with it or secured to it one element of a friction clutch 48, the other element of which is movable relative thereto and is splined to the shaft 45′.

48′ are springs adapted normally to press the elements of the friction clutch into operative engagement with each other, and 49 is an operating device connected to the movable element on the clutch shaft 45′. At the opposite end of the reel from this driving mechanism is arranged a friction retarding device indicated as an entirety by 50. This device is adapted to operate only during the paying off of the cable from the reel and preferably consists of a friction plate 50′ carried by the reel and a coöperating plate or disk 50^a loosely mounted upon the shaft 45′ and held normally in engagement with the plate 50′ by the springs 50^b. The plate or disk 50^a carries ratchet teeth 50^c which are adapted to be engaged by a pawl 50^d carried by an arm 45^b secured to the adjacent standard 45^a. This pawl rides over the

ratchet teeth when the reel is rotated to wind up the cable thereon, but engages with the teeth and holds the disk or plates 50^a stationary when the reel is rotated in the opposite direction to pay out the cable. During this paying off of the cable from the reel the friction retarding device 50 will consequently operate to oppose the rotation of the reel.

The cable 46 is preferably led inward through the periphery of the reel and thence out through the hollowed end of the shaft 45′, and is electrically connected to the electric collector at 51. From thence the current is conducted to the motors by the conductor 51′.

The reel, the mounting therefor and the immediately associated controlling mechanism therefor which I have shown in the drawings have been selected merely for purpose of illustration and are not broadly claimed as part of my present invention.

Mounted in a suitable framework 17 at the reel end of the locomotive are two parallel transverse shafts 3 and 18. One of the shafts, preferably the upper one, 3, is rotatable and has secured to it the pinion 2, which meshes with one of the main driving gears 1. The shaft 3 is, therefore, rotated in one direction or the other whenever the locomotive is moved. Loosely mounted on the shaft 3 is a sleeve 3^a and interposed between this sleeve and the shaft is a bearing bushing 3^b. Keyed to the sleeve 3^a is a second sleeve 8. Upon this sleeve 8 is a bearing bushing 14 which has threaded engagement with the sleeve and which is held in place by the lock nut 15. A sprocket wheel 13 is rotatably mounted on the bushing 14. This sprocket wheel 13 is formed with an annular recess within which is mounted the inner toothed element 9^a of a roller clutch 9. This inner element 9^a is secured to the sleeve 8 by means of pins 11. At each side of the toothed element 9^a is a flange 12, the flanges serving to hold the rollers 10 of the clutch in place. Also rotatably mounted on the sleeve 3^a is a gear wheel 7, a bearing bushing 7′ being interposed between the gear wheel and the sleeve. 4 is a clutch element splined to the shaft 3. A crank lever 5 and a control rod 6 are provided for moving the clutch element. This element is provided with teeth and mating teeth 6^a and 6^b are provided on the gear 7 and on the sleeve 3^a, the construction being such that when the clutch element 4 is moved it may engage both the gear 7 and the sleeve 3^a to cause them to rotate simultaneously.

It will be noted that by the construction described I have provided two separate clutches, one for connecting the gear wheel 7 with the shaft 3, and the other for connecting the sleeve 3^a with the shaft 3.

The shaft 18 is held against rotation and has rotatably mounted upon it a sleeve 18′ to which is keyed a gear wheel 19 which meshes with the gear wheel 7. The hub of the gear wheel 19 is extended and carries a bearing bushing 24 in threaded engagement with it, a lock nut 25 being provided to hold the bearing bushing in place. Upon this bearing bushing 24 is rotatably mounted a sprocket wheel 23 which is similar to and alines with the sprocket wheel 13. The sprocket wheel 23 is provided with an annular recess within which is mounted the inner element 21^a of a roller clutch 21. This inner clutch element 21^a is secured to the gear wheel 19 by means of pins 20, 20. At each side of the clutch element 21^a is a flange 21^b the flanges serving to hold the rollers 22 in place.

By referring to Figs. 1, 5, 7 and 8 it will be noted that when the locomotive is moving in the direction indicated by the arrow of Fig. 1, the shaft 3 will be driven in the direction indicated by the arrow in Fig. 7. It being assumed that the clutch element 4 is in operative position, the rotation of the shaft 3 in the direction indicated will cause the clutch 9 to operate to transmit motion in the same direction to the sprocket wheel 13. From this sprocket wheel 13 power is transmitted to rotate the reel in the winding direction through the chain 16 which passes over the sprocket wheel 47 on the reel shaft and the two driving sprocket wheels 13 and 23. When the locomotive is moved in the opposite direction, the direction of rotation of the shaft will also be reversed, as indicated in Fig. 8, and the clutch 9 will become inoperative. However, power will be transmitted through the gears 7 and 19 to the clutch 21, which acts to rotate the sprocket wheel 23 in the direction indicated in Fig. 8. This sprocket wheel 23 causes the movement of the chain 16 and the rotation of the sprocket wheel 47 in the same direction as before.

It will be understood from the foregoing description that by the arrangement of gears and clutches which I have provided the reel driving sprocket wheel 47 is always rotated in the same direction, irrespective of the direction of motion of the locomotive. In other words, assuming the clutch 4 to be in operative position, whenever the locomotive is in motion the sprocket wheel 47 is rotated in the direction to tend to wind the cable.

When the locomotive is moving away from the trolley wire the clutch 4 is thrown out of operative position. The clutch 48 can be allowed to remain in operative position and the friction brake 50 will serve to maintain sufficient tension in the cable as it is being unwound and laid upon the tracks to prevent the reel from rotating in an uneven manner and from unwinding the cable faster than is necessary to lay it in a straight line

along the tracks. Under these circumstances the motion of the reel will be transmitted through the clutch 48, sprocket wheel 47 and chain 16 to the sprocket wheels 13 and 23, and since the clutch member 4 is in its inoperative position, and there will be no tendency for the gears 7 and 19 to rotate as the clutches 9 and 21 are inoperative for this direction of movement. When, on the other hand, the locomotive is moving toward the trolley wire, the clutch 4 is thrown into operative position, that is, into engagement with the jaws 6^a, 6^b on the sleeve 3^a and gear 7, respectively, and the cable is wound upon the reel. The ratio of the gearing of the power transmitting mechanism is such that the axles tend to rotate the reel a little faster than is necessary to wind up the cable and the friction clutch 48 in taking care of this difference in the speed of rotation, will maintain sufficient tension in the cable to hold it taut and insure its being wound uniformly and in a regular manner upon the reel and prevent it from forming loose folds upon the track and being run over by the locomotive wheels.

It will thus be seen that it is not necessary to operate the clutch 48 at any time while the cable reeling mechanism is being used, but only to throw into and out of engagement the positive clutch member 4 as the locomotive is moving toward and away from the trolley wire, and it will also be evident that it matters not from which end of the locomotive the cable is being paid out, the entire cable reeling mechanism operating automatically to properly wind and unwind the cable under all circumstances, it being necessary for the operator merely to manipulate the clutch member 4.

Where the reel mounting is of a horizontal nature such as illustrated in the drawings, it is desirable that some sort of a cable spooling and guiding mechanism be provided for directing the cable onto the reel, and where such spooling and guiding mechanism is used, it is essential that it be adapted to operate to properly direct the cable on the reel irrespective of which end of the locomotive is moving in advance toward the paid out cable. For this purpose I have provided a cable spooling and guiding mechanism which is indicated as an entirety by 64. Of this mechanism 64′, 64^a indicate arms loosely mounted upon the reel shaft 45′, each one preferably being adjacent to one of the standards 45^a. At their outer ends each of these arms carries a bearing block or plate 64^b.

65 is a double threaded shaft arranged parallel to the reel shaft 45′ and mounted at its ends in bearings in the adjacent bearing blocks 64^b. At the friction clutch end of the reel the shaft 65 has secured to it a sprocket wheel 66.

67 is a sprocket wheel arranged in alinement with the sprocket wheel 66 and secured to the reel shaft 45′.

68 is a driving chain connecting the sprockets 66 and 67.

69 indicates as an entirety a traveler which is suitably supported and guided and which is adapted to engage the shaft 65 and to move to and fro along it as it is rotated by the reel shaft 45′. This traveler is adapted to engage with the cable and to guide it as it is wound upon the reel.

When the cable is to be paid off from and wound onto the reel at the reel end of the locomotive, it is desirable to have the cable spooling and guiding mechanism arranged as shown in dotted lines in Fig. 1, so that the traveler 69 for guiding the cable onto the reel will be in front of the reel. To hold the cable spooling and guiding mechanism in this position I have provided brackets 33 arranged at either side of the reel supporting structure, each secured to an adjacent standard 45^a and each adapted to engage with and support one of the bearing blocks 64^b.

When it is necessary to pay out and reel up the cable from the operator's end of the locomotive, the cable spooling and guiding mechanism may be swung to the position indicated in full lines in Fig. 1, in which case the cable guiding traveler is still in front of the reel when the direction of travel of the reel is considered. For maintaining the spooling and guiding mechanism in this position I have provided brackets 33^a each arranged at one end of the reel supporting frame, each secured to the adjacent standard 45^a and each adapted to engage and support one of the bearing blocks 64^b.

The transversely arranged guide and supporting rollers carried by the traveler 69 are so arranged that one of them will support the flexible cable when the spooling and guiding mechanism is in one position while the other will support the cable when the said mechanism is in its other position.

What I claim is—

1. In an electric locomotive, the combination with a rotatable shaft connected so as to rotate in either direction of rotation according to the direction of travel of the locomotive, of a cable reel mounted to travel with the locomotive, a flexible conductor cable wound upon the reel and adapted to have its free end secured to a fixed conductor, a train of power transmitting elements interposed between the shaft and the reel comprising an automatically operable device adapted to rotate the reel only in one given direction when the shaft is rotating in a given direction and a manually controllable positive clutch interposed between the shaft and the said automatically operable device, and a second train of power transmitting elements interposed between the shaft and the reel

comprising a second automatically operable device adapted to rotate the reel only in the same given direction as before when the shaft is rotating in the other direction and a second manually controllable positive clutch arranged to be thrown into operation substantially simultaneously with the first positive clutch and interposed between the shaft and the said second automatically operable device.

2. In an electric locomotive, the combination with a rotatable shaft connected so as to rotate in either direction of rotation according to the direction of travel of the locomotive, of a cable reel, a flexible conductor cable wound upon the reel and adapted to have its free end secured to a fixed conductor, of a train of power transmitting elements interposed between the rotatable shaft and the cable reel adapted to permit the unwinding of the cable and comprising two automatically actuated roller clutches, one adapted to transmit power from the rotatable shaft when rotating in one direction to the reel for rotating it in the winding direction, and the other adapted to transmit power from the rotatable shaft when rotating in the opposite direction to the reel for rotating it also in the winding direction.

3. In an electric locomotive, the combination with a rotatable shaft connected so as to rotate in either direction of rotation according to the direction of travel of the locomotive, of a cable reel mounted to travel with the locomotive, a flexible conductor cable wound upon the reel and adapted to have its free end secured to a fixed conductor, a train of power transmitting elements interposed between the shaft and the reel comprising an automatically operable device adapted to rotate the reel only in one given direction when the shaft is rotating in a given direction and a manually controllable positive clutch interposed between the shaft and the said automatically operable device, a second train of power transmitting elements interposed between the shaft and the reel comprising a second automatically operable device adapted to rotate the reel only in the same given direction as before when the shaft is rotating in the other direction and a second manually controllable positive clutch arranged to be thrown into operation substantially simultaneously with the first positive clutch and interposed between the shaft and the said second automatically operable device, a friction clutch interposed between each of the said trains of power transmitting elements and the reel, and means for manually controlling the friction clutch.

4. In an electric locomotive, the combination with a rotatable shaft connected so as to rotate in either direction of rotation according to the direction of travel of the locomotive, of a cable reel mounted to travel with the locomotive, a flexible conductor cable wound upon the reel and adapted to have its free end secured to a fixed conductor, a train of power transmitting elements interposed between the shaft and the reel comprising an automatically operable device adapted to rotate the reel only in one given direction when the shaft is rotating in a given direction and a manually controllable positive clutch interposed between the shaft and the said automatically operable device, a second train of power transmitting elements interposed between the shaft and the reel comprising a second automatically operable device adapted to rotate the reel only in the same given direction as before when the shaft is rotating in the other direction and a second manually controllable positive clutch arranged to be thrown into operation substantially simultaneously with the first positive clutch and interposed between the shaft and the said second automatically operable device, a friction clutch interposed between each of the said trains of power transmitting elements and the reel, means for manually controlling the friction clutch, and a friction brake adapted to retard the rotation of the reel only in the direction of rotation opposite to that in which it rotates when actuated by the said rotatable shaft.

5. In an electric locomotive, the combination with a rotatable shaft connected so as to be rotated in different directions of rotation according to the direction of travel of the locomotive, of a cable reel, a flexible conductor cable wound upon the reel and adapted to have its free end secured to a fixed conductor, a train of power transmitting elements between the shaft and the reel comprising a uni-directional drive clutch automatically operable when the shaft is operating in one direction and a manually controllable positive double direction drive clutch interposed between the shaft and the said automatic clutch, a second train of power transmitting elements interposed between the shaft and the reel comprising a second uni-directional drive clutch automatically operable to rotate the reel in the same direction as that in which it is driven by the first mentioned clutch when the shaft is rotating in the other direction and a second manually controllable positive double direction drive clutch interposed between the shaft and the said second automatic clutch and arranged to be thrown into operation substantially simultaneously with the first double direction drive clutch.

6. In an electric locomotive, the combination with a rotatable shaft connected so as to be rotated in different directions of rotation according to the direction of travel of the locomotive, of a cable reel, a flexible con-

ductor cable wound upon the reel and adapted to have its free end secured to a fixed conductor, a train of power transmitting elements between the shaft and the reel comprising an automatically acting uni-directional drive clutch operable when the shaft is rotating in one direction and a manually controllable positive double direction drive clutch interposed between the shaft and the said automatic clutch, a second train of power transmitting elements interposed between the shaft and the reel comprising a second automatically acting uni-directional drive clutch operable when the shaft is rotating in the other direction to rotate the reel in the same direction as that in which it is driven by the first mentioned clutch, and a second manually controllable positive double direction drive clutch interposed between the said shaft and the second automatic clutch and arranged to be thrown into operation substantially simultaneously with the first double direction drive clutch, and a friction clutch interposed between each of the trains of power transmitting elements and the reel.

In testimony whereof I affix my signature, in presence of two witnesses.

CARL J. EVALD WAXBOM.

Witnesses:
R. R. DUNLOP,
W. R. YOUMANS.

Copies of this patent may be obtained for five cents each, by addressing the "Commissioner of Patents, Washington, D. C."