(12) INTERNATIONAL APPLICATION PUBLISHED UNDER THE PATENT COOPERATION TREATY (PCT)

(19) World Intellectual Property Organization
International Bureau

(43) International Publication Date
29 July 2004 (29.07.2004)

PCT

(10) International Publication Number
WO 2004/063972 A1

(51) International Patent Classification[7]: G06K 7/00, H01R 13/64, H04B 1/38, H05K 5/02, H02K 5/22, F02M 51/00

(21) International Application Number: PCT/US2004/000449

(22) International Filing Date: 9 January 2004 (09.01.2004)

(25) Filing Language: English

(26) Publication Language: English

(30) Priority Data:
2927/2003 9 January 2003 (09.01.2003) JP

(71) Applicant *(for all designated States except US)*: **MOLEX INCORPORATED** [US/US]; 2222 Wellington Court, Lisle, IL 60532 (US).

(72) Inventors; and

(75) Inventors/Applicants *(for US only)*: **TANAKA, Mikiji** [—/JP]; Estatera-Shounandai MC1303, 7-2, Shounandai 4-chome, Fujisawa-shi, Kanagawa 252-0804 (JP). **SASAO, Masami** [—/JP]; ULS-Tsukushino-Duplex B404, 16-2, Ogawa 1-chome, Machida-shi, Tokyo 194-0003 (JP).

(74) Agent: **CALDWELL, Stacey, E.**; Molex Incorporated, 2222 Wellington Court, Lisle, IL 60532 (US).

(81) Designated States *(unless otherwise indicated, for every kind of national protection available)*: AE, AG, AL, AM, AT, AU, AZ, BA, BB, BG, BR, BW, BY, BZ, CA, CH, CN, CO, CR, CU, CZ, DE, DK, DM, DZ, EC, EE, EG, ES, FI, GB, GD, GE, GH, GM, HR, HU, ID, IL, IN, IS, JP, KE, KG, KP, KR, KZ, LC, LK, LR, LS, LT, LU, LV, MA, MD, MG, MK, MN, MW, MX, MZ, NA, NI, NO, NZ, OM, PG, PH, PL, PT, RO, RU, SC, SD, SE, SG, SK, SL, SY, TJ, TM, TN, TR, TT, TZ, UA, UG, US, UZ, VC, VN, YU, ZA, ZM, ZW.

(84) Designated States *(unless otherwise indicated, for every kind of regional protection available)*: ARIPO (BW, GH, GM, KE, LS, MW, MZ, SD, SL, SZ, TZ, UG, ZM, ZW), Eurasian (AM, AZ, BY, KG, KZ, MD, RU, TJ, TM), European (AT, BE, BG, CH, CY, CZ, DE, DK, EE, ES, FI, FR, GB, GR, HU, IE, IT, LU, MC, NL, PT, RO, SE, SI, SK,

[Continued on next page]

(54) Title: MEMORY CARD CONNECTOR WITH EJECTING MECHANISM AND PROTECTION AGAINST ERRONEOUS CARD INSERTION

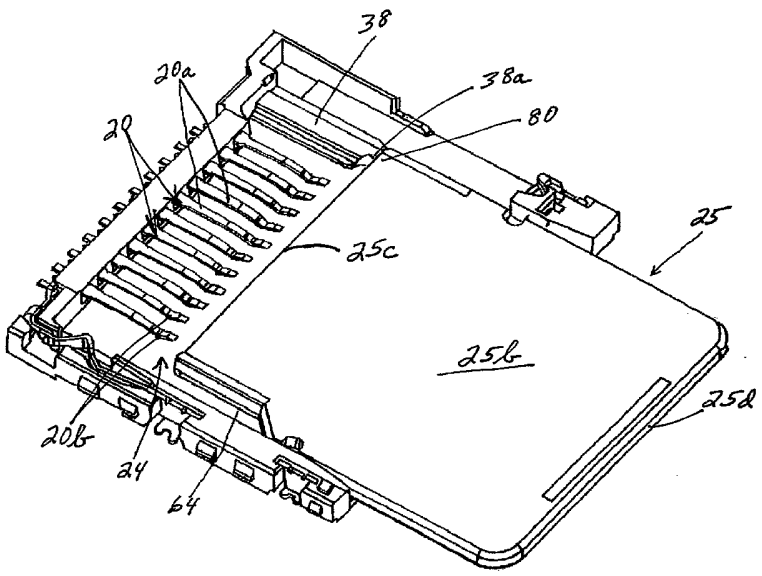

(57) Abstract: A memory card connector includes an insulating housing defining a front receptacle area communicating with an interior cavity for receiving a memory card. A plurality of terminals are mounted on the housing and have contact portions at a rear of the cavity for engaging contacts on the memory card. A slider is movable mounted on the housing and is engageable with the memory card for movement therewith into and out of the cavity. A guide rail on the housing performs a dual function of (1) engaging the slider to guide the slider in its movement on the housing, and (2) preventing the memory card from being inserted into the cavity in an abnormal orientation.

WO 2004/063972 A1

TR), OAPI (BF, BJ, CF, CG, CI, CM, GA, GN, GQ, GW, ML, MR, NE, SN, TD, TG).

Published:

— *with international search report*

— *before the expiration of the time limit for amending the claims and to be republished in the event of receipt of amendments*

For two-letter codes and other abbreviations, refer to the "Guidance Notes on Codes and Abbreviations" appearing at the beginning of each regular issue of the PCT Gazette.

MEMORY CARD CONNECTOR WITH EJECTING MECHANISM AND PROTECTION AGAINST ERRONEOUS CARD INSERTION.

Field of the Invention:

This invention generally relates to the art of electrical connectors and, particularly, to a memory card connector. The invention is specifically directed to a system for protecting the terminals of the card connector in the event of erroneous or abnormal insertion of the memory card into the connector, including a rail which performs a dual function of guiding a slider for movement on the connector housing.

Background of the Invention:

Memory cards are known in the art and contain intelligence in the form of a memory circuit or other electronic program. Some form of card reader reads the information or memory stored on the card. Such cards are used in many applications in today's electronic society, including video cameras, digital still cameras, smartphones, PDA's, music players, ATMs, cable television decoders, toys, games, PC adapters, multi-media cards and other electronic applications. Typically, a memory card includes a contact or terminal array for connection through a card connector to a card reader system and then to external equipment. The connector readily accommodates insertion and removal of the card to provide quick access to the information and program on the card. The card connector includes terminals for yieldingly engaging the contact array of the memory card.

The memory card may be inserted into and removed from a card-receiving cavity of the connector defined, at least in part, by a connector housing, simply by grasping a rear trailing end or edge of the card and pushing the card into and pulling the card out of the cavity. On the other hand, some card connectors include a card ejection mechanism whereby the memory card simply is inserted into the connector, and the ejection mechanism is used to facilitate removal of the card from the connector. One example of a card ejection mechanism is a push-and-push type of card ejector which includes a cam slider which engages the memory card for movement therewith into and out of the connector. Guide slots or rails are provided on the connector housing for guiding the slider for movement on and relative to the housing. Such a guide rail, for instance, requires additional space at a side of the connector housing which is contra to most of the present design criteria of downsizing or miniaturizing the size of most memory card connectors.

In addition, with most memory card connectors, it is possible to insert the memory card into the card-receiving cavity in an erroneous or abnormal orientation, such as a reversed front-to-back orientation or an upside-down orientation. Such abnormal orientations can cause damage or deformation to the contact portions of the terminals if not corrected. In order to prevent the wrong insertion of a card, various protection systems have been devised. For instance, in Japanese Patent Laid-Open No. 2001-160458, a projection is formed at the inner or rear end of the card-receiving cavity, near the terminal contact portions, to prevent an abnormally oriented card from being inserted deep into the card-receiving cavity, thereby preventing further advance of the card into possible damaging engagement with the terminal contacts. The projection is identified at 50 in FIG. 7 of that publication, and the terminals are indicated at 40 and are protected from being deformed.

Another system is shown in Japanese Patent No. 3325865 wherein a bent spring clip projects into the card-receiving cavity from a side thereof and is withdrawn upon insertion of the memory card in its given, normal orientation. If the card is inserted in an abnormal orientation, the spring clip prevents the card from engaging the terminal contacts. The spring clip is identified at 28 in FIGS. 1 and 2 of that publication.

Unfortunately, like the guide rail for the cam slider of the card ejection mechanism, such components as the projection or the bent spring strip which prevents an abnormally oriented card from being inserted into the connector cause problems in trying to downsize or miniaturize the overall card connector. The present invention is directed to solving these problems by providing a unique system wherein a guide rail on the connector housing performs a dual function of guiding the slider as well as preventing an abnormally oriented memory card from being inserted into the connector. This dual function results in reducing the number of operative components of the connector and, thereby, facilitates design attempts to downsize the connector.

Summary of the Invention:

An object, therefore, of the invention is to provide a new and improved memory card connector with abnormal card insertion prevention, the connector including a movable slider.

In the exemplary embodiment of the invention, the memory card connector includes a housing which mounts a plurality of terminals having contact portions for engaging contacts on at least one side of a memory card. A cover is mounted on the housing and defines a card-receiving cavity therebetween for receiving the memory card in a given, normal orientation. A card eject mechanism includes a slider movably mounted on the housing and engageable

with the memory card for movement therewith into and out of the cavity. A guide rail is provided on the housing and performs a dual function of (1) engaging the slider to guide the slider in its movement on the housing, and (2) preventing the memory card from being inserted into the cavity in an abnormal orientation.

According to one aspect of the invention, the guide rail is elongated in the direction of movement of the slider and the direction of insertion of the memory card into the cavity. The elongated guide rail has a distal end for blocking insertion of an abnormally oriented memory card. As shown herein, the distal end of the guide rail is tapered inwardly toward the cavity.

According to another aspect of the invention, the housing has an outer side wall and the elongated guide rail is generally parallel to and spaced from the side wall. This defines a space between the guide rail and the side wall in which the slider moves on the housing. In the preferred embodiment, the housing is molded of dielectric plastic material, and the guide rail is molded integrally therewith. The cover may be a metal shell, such as being stamped and formed of sheet metal material.

Other objects, features and advantages of the invention will be apparent from the following detailed description taken in connection with the accompanying drawings.

Brief Description of the Drawings:

The features of this invention which are believed to be novel are set forth with particularity in the appended claims. The invention, together with its objects and the advantages thereof, may be best understood by reference to the following description taken in conjunction with the accompanying drawings, in which like reference numerals identify like elements in the figures and in which:

FIG. 1 is a perspective view of a memory card connector according to the invention, with the metal shell removed and the memory card shown in phantom in a preload position;

FIG. 2 is a perspective view of the insulating housing of the connector mounting the terminals, but with the card eject mechanism removed;

FIG. 3 is a perspective view of the card connector, with the memory card in an initial stage of insertion;

FIG. 4 is a bottom perspective view of the memory card;

FIG. 5 is a top perspective view of the memory card;

FIG. 6 is a top plan view of the connector, with the metal shell removed to facilitate an illustration of the interior components of the connector;

FIG. 7 is an enlarged, fragmented section taken generally along line A-A in FIG. 9, with the terminals removed and showing the interengagement of the slider and the guide rail;

FIG. 8 is a front-to-rear section through the connector;

FIG. 9 is a view similar to that of FIG. 1, but with the memory card and slider in the fully inserted position;

FIG. 10 is a fragmented perspective view of the area of the housing at which the guide rail is located;

FIG. 11 is a view similar to that of FIGS. 1 and 9, with the memory card and slider in a position of insertion between the preload position of FIG. 1 and the fully inserted position of FIG. 9;

FIG. 12 is a perspective view showing the memory card inserted in an abnormal, reversed front-to-back orientation; and

FIG. 13 is a view similar to that of FIG. 12, with the memory card inserted in an abnormal upside-down orientation.

Detailed Description of the Preferred Embodiment:

Referring to the drawings in greater detail, and first to FIGS. 1-3, 6 and 8, the invention is embodied in a memory card connector, generally designated 14 (Fig. 3) which includes two basic components, namely a housing, generally designated 16 (Fig. 2), and a metal shell or cover, generally designated 18 (Fig. 3), along with a plurality of terminals, generally designated 20, mounted on the housing and a card eject mechanism, generally designated 22, also mounted on the housing. The housing is fabricated of insulating material such as molded plastic, and the cover is fabricated of metal such as stamped and formed sheet metal material.

The cover and the housing combine to form an interior card-receiving cavity 24 (Fig. 1) having an open mouth at a front receptacle area 26 of the housing. The front receptacle area permits insertion and removal of a memory card 25 into and out of cavity 24.

Referring specifically to FIG. 2 in conjunction with FIGS. 1, 3, 6 and 8, the molded plastic insulating housing 16 is generally U-shaped and includes a bottom plate 28 which is curved inwardly at its front side, as at 28a. The U-shaped housing includes a pair of side wall blocks 30 and 32 at opposite sides of bottom plate 24, and a rear wall block 34 which includes a plurality of through passages 34a within which terminals 20 are mounted and fixed. The terminals include elongated contact arms 20a which project forwardly into cavity 24. Side wall block 30 extends substantially the entire length of bottom plate 28, whereas

side wall block 32 is much shorter and is located at the front receptacle area 26 of the housing. This leaves an open space 36 for receiving a card eject mechanism as described hereinafter. A thin side wall 32a extends forwardly, short of side wall block 32 and delimits an open space 36 allotted for the card eject mechanism. A guide rail 38 is molded integrally with the top of bottom plate 28 and is elongated in the direction of insertion of memory card 25 into cavity 24. The guide rail has a distal end 38a which blocks insertion of an abnormally oriented memory card, as will be seen hereinafter. As seen clearly in FIG. 2, elongated guide rail 38 is generally parallel to and spaced from side wall 32a to define a space therebetween which is coextensive with open space 36 described above. Finally, the outer surfaces of side wall blocks 30 and 32 as well as side wall 32a are provided with chamfered latch bosses 40 for latching cover 18 to the housing.

Memory card connector 14 is designed for mounting on a printed circuit board (not shown). To that end, FIGS. 1-3 and 6 show that a plurality of metal "fitting nails", generally designated 42, are press-fit into slots 44 in the side walls blocks of the housing and are connected, as by soldering, to appropriate mounting pads on the circuit board. These FIGS. also show that a detection switch, generally designated 46, is mounted on side wall block 30 and includes a terminal portion 46a for engaging a side of the memory card to detect its full insertion into cavity 24. The detection switch has a tail portion 46b for connection, as by soldering, to an appropriate circuit trace on the printed circuit board.

Referring particularly to FIG. 3, metal shell or cover 18 may be stamped and formed of sheet metal material, as stated above. The cover includes a top wall 18a which substantially covers the entirety of the top of insulating housing 16. The cover has a pair of depending side walls 18b and 18c which cover the outsides of side wall blocks 30 and 32 as well as side wall 32a of the housing. The cover is snap-latched onto the housing by means of a plurality of latch openings 18d which snap over latch bosses 40 on the outsides of the housing as the cover is pressed down onto the housing. As stated above, the cover and the housing combine to define the interior card-receiving cavity 24, with front receptacle area 26 to permit insertion and removal of memory card 25 into the cavity.

Card eject mechanism 22 shown in FIGS. 1 and 6 is of a fairly known push-and-push mechanism and will not be described in considerable detail. The eject mechanism is mounted within open space 36 (Fig. 2) of the housing. The mechanism includes a cam slider 48, a coil spring 50 to urge the cam slider toward front receptacle area 26 and a pin member 52. The pin member has a generally inverted U-shape and includes one end 52a pivotally positioned in a hole in side wall block 32 of the housing and an opposite end 52b engaged in a heart-

shaped cam slot 54 in the top of the slider. A spring arm 56 (Fig. 3) is stamped and formed out of cover 18 and presses downwardly on pin member 52 and particularly pushes end 52b thereof into cam slot 54 so that the end can follow the circulation of the heart-shaped cam slot to move in the push-and-push pattern as coil spring 62 constantly biases the slider toward the front receptacle area of the housing.

Cam slider 48 has an inner side wall section 48a which has a chamfered lock projection 48b at its front distal end for latching engagement with memory card 25 as will be seen hereinafter. Inner side wall section 48a is relatively thin to allow for inner and outer flexing of lock projection 48b. Cam slider 48 also has a step-like overhanging top plate 48c which projects inwardly toward card-receiving cavity 24. Finally, a card-engaging arm 48d extends inwardly beyond guide rail 38.

Referring to FIG. 8 in conjunction with FIG. 1, it can be seen that contact arm 20a of each terminal 20 is cantilevered forwardly into card-receiving cavity 24. The contact arm terminates in a contact portion 20b which is rounded or convex for engaging a contact on the top of memory card 25, as will be seen hereinafter. Each terminal includes a body portion 20c for press-fitting into a respective one of the through passages 34a in rear wall block 34 of the housing to rigidly fix the terminal to the housing. Finally, each terminal 20 includes a rear solder tail 20d for solder connection to an appropriate circuit trace on the printed circuit board. FIG. 8 also shows that the housing may include a plurality of mounting posts 56 for insertion into a plurality of mounting holes in the printed circuit board.

Referring back to FIGS. 4 and 5, memory card 25, in its given, normal orientation of FIG. 1, includes a top surface 25a and a bottom surface 25b. The card has a front leading edge 25c and a trailing rear edge 25d. The card has a width "W". The card is generally rectangular in shape and contains semiconductor memories on the inside thereof, with a plurality of exposed contact pads 58 in a recessed area 60 in top surface 25a at front leading edge 25c of the card. Contact pads 58 are electrically coupled to electrical circuitry within the memory card. The card has locking recesses 62 at opposite sides thereof. One corner 64 of the card is notched and includes an angled surface 64a for polarity purposes to ensure correct or normal orientation of the card into cavity 24. The longitudinal side of notched corner 64 is stepped, as at 64b.

FIG. 7 shows how guide rail 38 is configured for engagement with slider 48 so that the guide rail guides the slider in its movement on housing 16. It can be seen that the top of the slider has a stepped configuration 66 which matches a stepped configuration 68 on the inside of inner side wall section 48a and the bottom of overhanging top plate 48c of the

slider. The inner side of guide rail 38 also has a stepped configuration 70 which conforms to stepped edge 64b (Fig. 4) of notched corner 64 of memory card 25. Finally, FIG. 7 shows how card-engaging arm 48d of the slider engages front leading edge 25c of the memory card.

FIG. 10 is an isolated depiction of guide rail 38 shown spaced inwardly from thin side wall 32a of housing 16. The outside dimension "L1" of the guide rail is longer than the inside dimension "L2" so that distal end 38a of the guide rail is angled, as at 72. This angled or tapered surface 72 matches the angled surface 64a (Figs. 4 and 5) of notched corner 64 of the memory card to allow the memory card to be inserted to its fullest position shown in FIG. 9.

The insertion of memory card 25 in its correct or normal orientation will now be described. The memory card is inserted into card receiving cavity 24 in the direction of arrow "A" in FIG. 1 until the memory card reaches a preload position shown in FIG. 1. In this preload position, lock projection 48b of cam slider 48 engages within locking recess 62 at the adjacent side edge of the memory card. This locks the card to the cam slider for movement therewith. FIGS. 1 and 3 also show that the width "W" of the memory card is just slightly less than the width between side wall blocks 30 and 32 of the connector housing so that the memory card is guided into its preload position shown in FIG. 1.

FIG. 11 shows memory card 25 inserted further in the direction of arrow "A", with cam slider 48 of eject mechanism 22 moving with the memory card. Inner end 52b of pin member 52 moves within heart-shaped cam slot 54 in the top of the cam slider as is known in the art, as cam slider 48 compresses coil spring 50.

FIG. 9 shows memory card 25 fully inserted into its mated position within the connector, as inner end 52b of pin member 52 moves to a locked position within heart-shaped cam slot 54. During the complete stroke of movement of the memory card and cam slider 48, guide rail 38 is effective to smoothly guide cam slider 48 in its movement on housing 16 compressing coil spring 50. As is known, in order to eject the memory card, the card simply is pushed inwardly again to move pin member 52 relative to cam slot 54, and coil spring 50 will become effective to automatically eject the memory card.

FIG. 12 shows memory card 25 in an attempt to insert the card into cavity 24 of the connector in an erroneous or normal orientation, namely a reversed rear-to-front orientation whereby the normally rear trailing edge 25d of the card is being inserted first into the cavity. Since neither of the rear corners of the card have a notched corner (as at 64), the front corner of the memory card will abut against distal end 38a of guide rail 38 and the guide rail will prevent edge 25d of the card from engaging contact portions 20b at the distal ends of contact

arms 20a of terminals 20. The contact portions and the terminals, themselves, thereby are protected.

FIG. 13 shows memory card 25 being inserted into cavity 24 in an incorrect or abnormal orientation, namely the card is upside-down with normally bottom surface 25b facing upwardly. It can be seen that a corner 80 is not notched and, thereby, will abut distal end 38a of guide rail 38 to prevent leading edge 25c of the card from engaging contact portions 25b at the distal ends of contact arms 20a of terminals 20. The contact portions and the terminals, thereby, are protected from damage.

It will be understood that the invention may be embodied in other specific forms without departing from the spirit or central characteristics thereof. The present examples and embodiments, therefore, are to be considered in all respects as illustrative and not restrictive, and the invention is not to be limited to the details given herein.

CLAIMS:

What is claimed is:

1. A memory card connector, comprising:

a housing mounting a plurality of terminals having contact portions for engaging contacts on at least one side of a memory card;

a cover mounted on the housing and defining a card-receiving cavity therebetween for receiving the memory card in a given, normal orientation;

a card eject mechanism including a slider movably mounted on the housing and engageable with the memory card for movement therewith into and out of the cavity; and

a guide rail on the housing and performing a dual function of (1) engaging the slider to guide the slider in its movement on the housing, and (2) preventing the memory card from being inserted into the cavity in an abnormal orientation.

2. The memory card connector of claim 1 wherein said guide rail is elongated in the direction of movement of the slider and the direction of insertion of the memory card into the cavity.

3. The memory card connector of claim 2 wherein said elongated guide rail has a distal end for blocking insertion of an abnormally oriented memory card.

4. The memory card connector of claim 3 wherein said distal end of the guide rail is tapered inwardly toward the cavity.

5. The memory card connector of claim 2 wherein said housing has an outer side wall and the elongated guide rail is generally parallel to and spaced from the side wall to define an open space therebetween in which the slider moves on the housing.

6. The memory card connector of claim 1 wherein said housing is molded of dielectric plastic material, and the guide rail is molded integrally therewith.

7. The memory card connector of claim 6 wherein said cover comprises a metal shell.

8. A memory card connector, comprising:

a molded plastic housing mounting a plurality of terminals having contact portions for engaging contacts on at least one side of a memory card;

a cover mounted on the housing and defining a card-receiving cavity therebetween for receiving the memory card in a given, normal orientation;

a card eject mechanism including a slider movably mounted on the housing and engageable with the memory card for movement therewith into and out of the cavity; and

a guide rail molded integrally with the housing and performing a dual function of (1) engaging the slider to guide the slider in its movement on the housing, and (2) preventing the memory card from being inserted into the cavity in an abnormal orientation, the guide rail being elongated in the direction of movement of the slider and the direction of insertion of the memory card into the cavity, the elongated guide rail being generally parallel to and spaced from an outer side wall of the housing to define an open space therebetween in which the slider moves on the housing, and the elongated guide rail having a distal end for blocking insertion of an abnormally oriented memory card.

9. The memory card connector of claim 8 wherein said distal end of the guide rail is tapered inwardly toward the cavity.

10. The memory card connector of claim 8 wherein said cover comprises a metal shell.

11. A memory card connector, comprising:

an insulating housing defining a front receptacle area communicating with an interior cavity for receiving a memory card;

a plurality of terminals mounted on the housing in a side-by-side array transversely across a rear of the housing, the terminals having contact portions at a rear of the cavity for engaging contacts on the memory card;

a slider movably mounted on the housing and engageable with the memory card for movement therewith into and out of the cavity; and

a guide rail on the housing and performing a dual function of (1) engaging the slider to guide the slider in its movement on the housing, and (2) preventing the memory card from being inserted into the cavity in an abnormal orientation.

12. The memory card connector of claim 11 wherein said guide rail is elongated in the direction of movement of the slider and the direction of insertion of the memory card into the cavity.

13. The memory card connector of claim 12 wherein said elongated guide rail has a distal end for blocking insertion of an abnormally oriented memory card.

14. The memory card connector of claim 13 wherein said distal end of the guide rail is tapered inwardly toward the cavity.

15. The memory card connector of claim 12 wherein said housing has an outer side wall and the elongated guide rail is generally parallel to and spaced from the side wall to define an open space 0therebetween in which the slider moves on the housing.

16. The memory card connector of claim 11 wherein said housing is molded of dielectric plastic material, and the guide rail is molded integrally therewith.

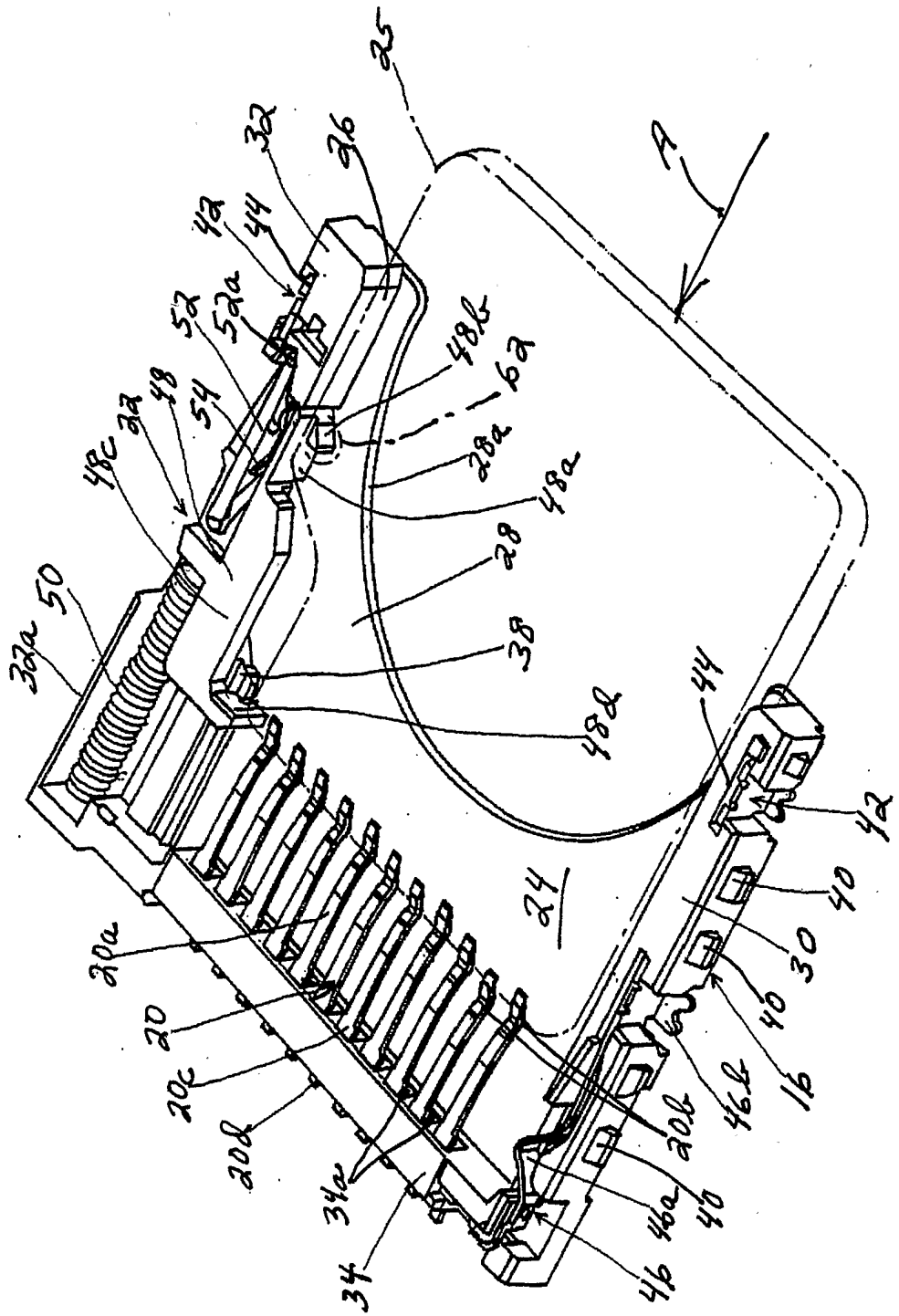
25
A
32
26
42
44
52
52a
48b
62
28a
48a
48c
22
48
54
28
38
48d
32a
50
44
42
40
30
40
16
46b
24
20a
20
20c
20d
34a
34
20b
46a
40
46

FIG. 1

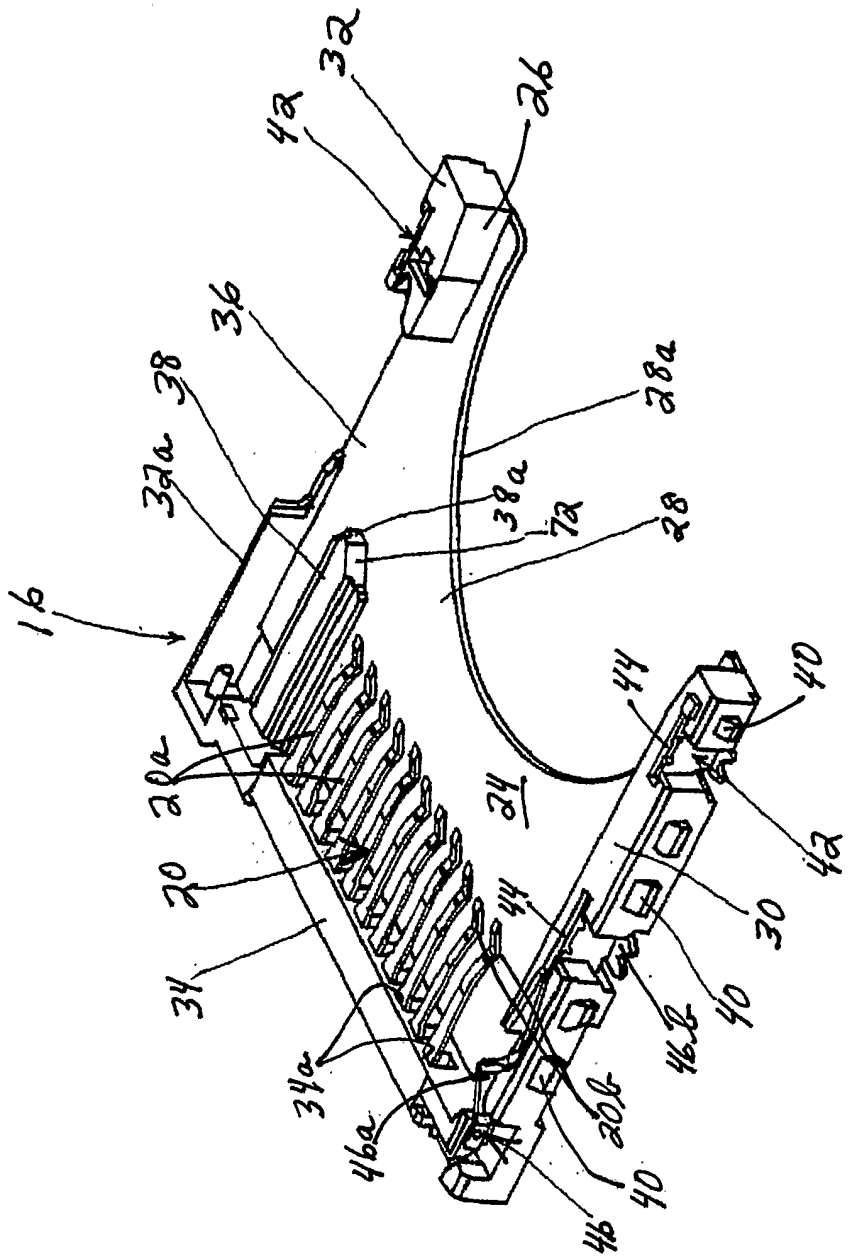
16
32
42
26
36
38
32a
28a
38a
72
28
20a
20
34
34a
46a
46
40
20b
44
24
30
46b
42

FIG. 2

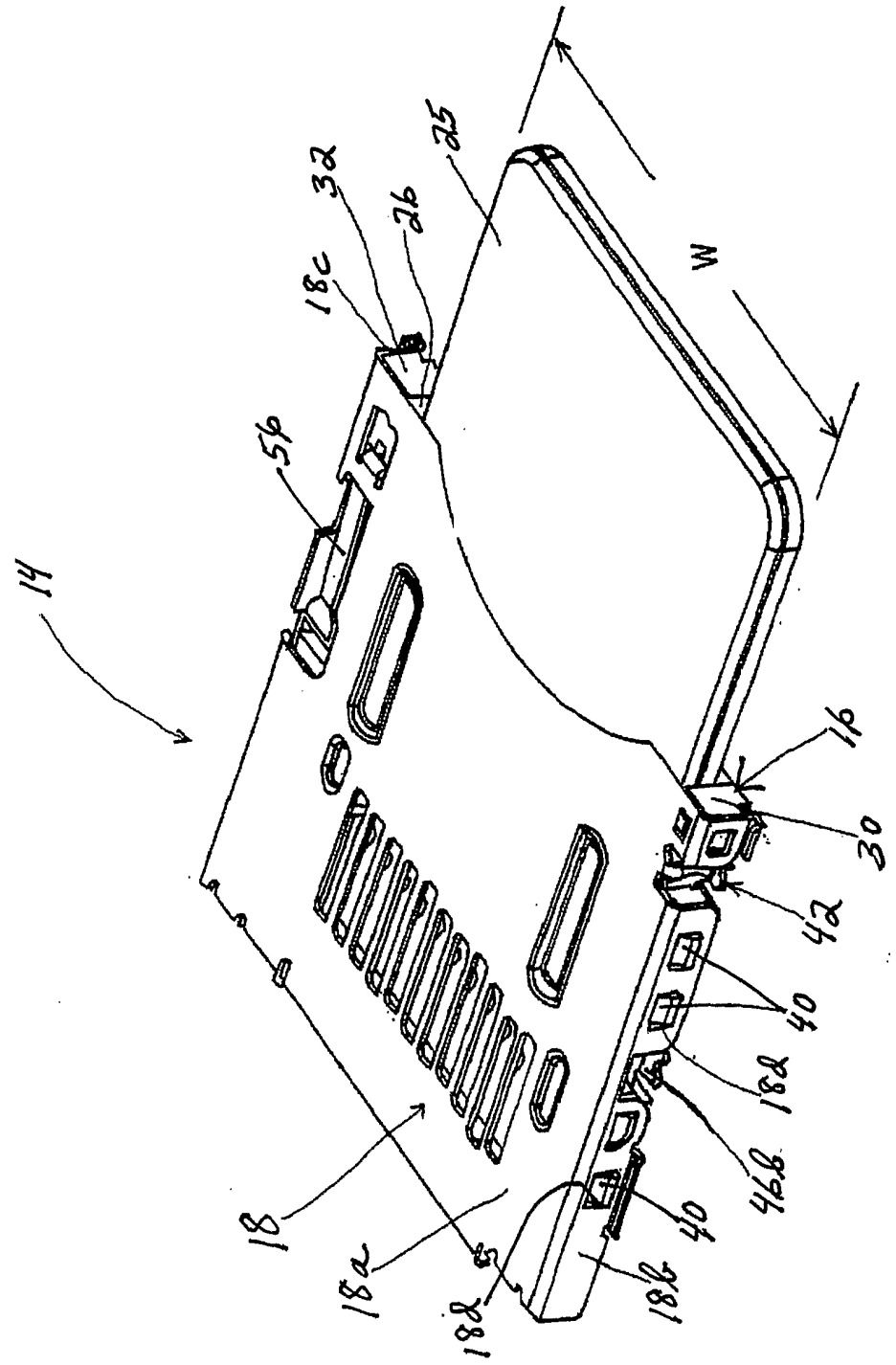

FIG. 3

FIG. 4

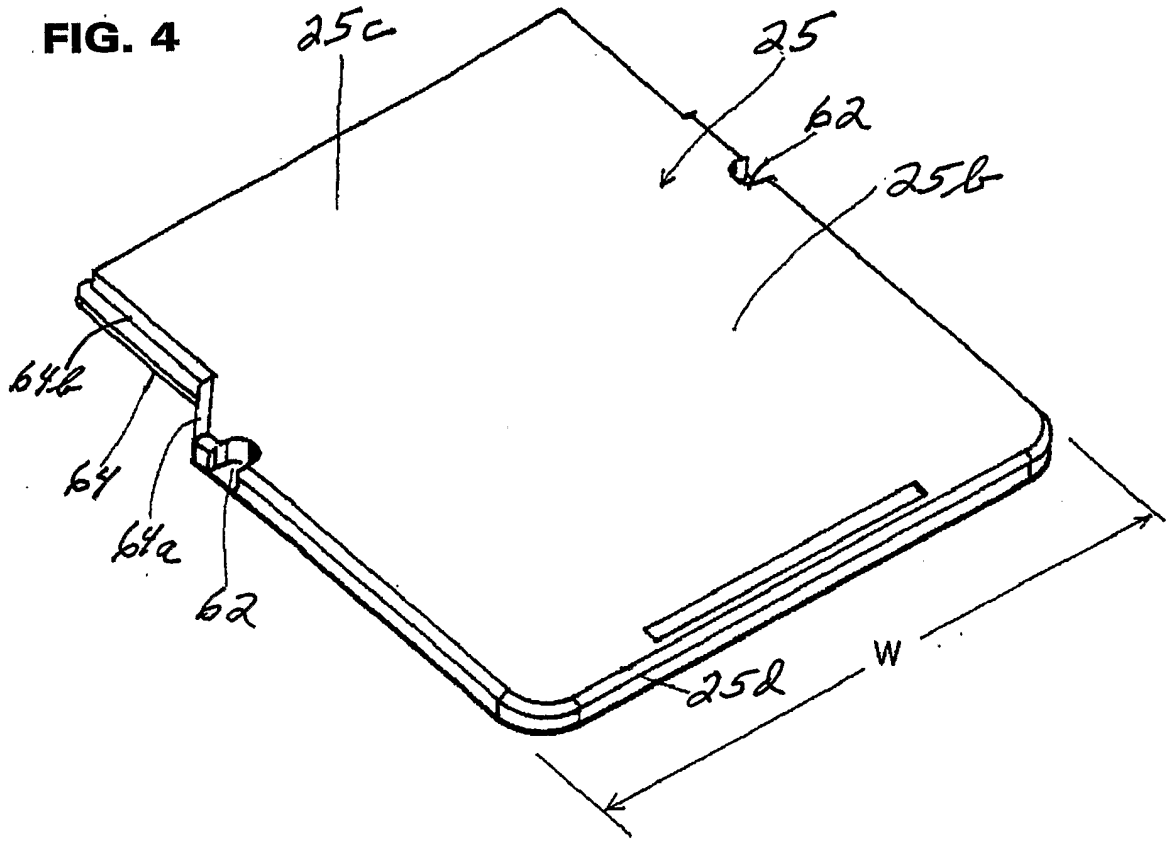

FIG. 5

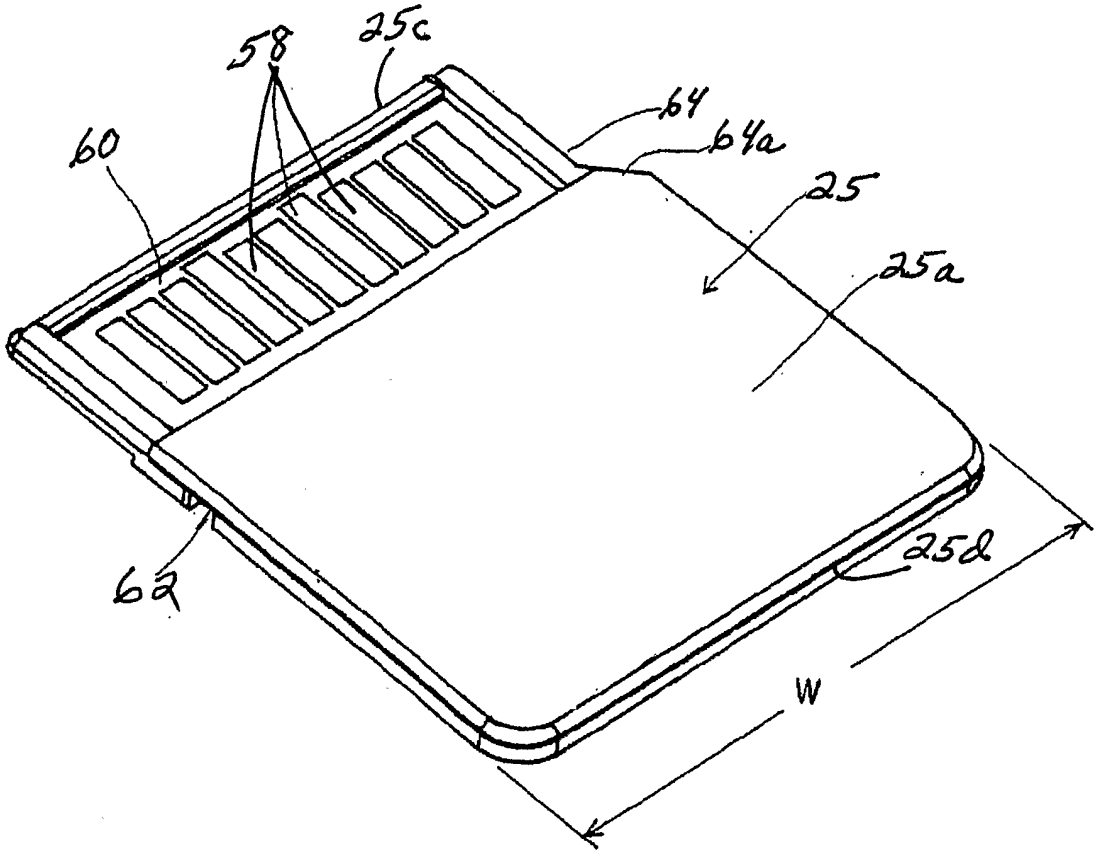

FIG. 6

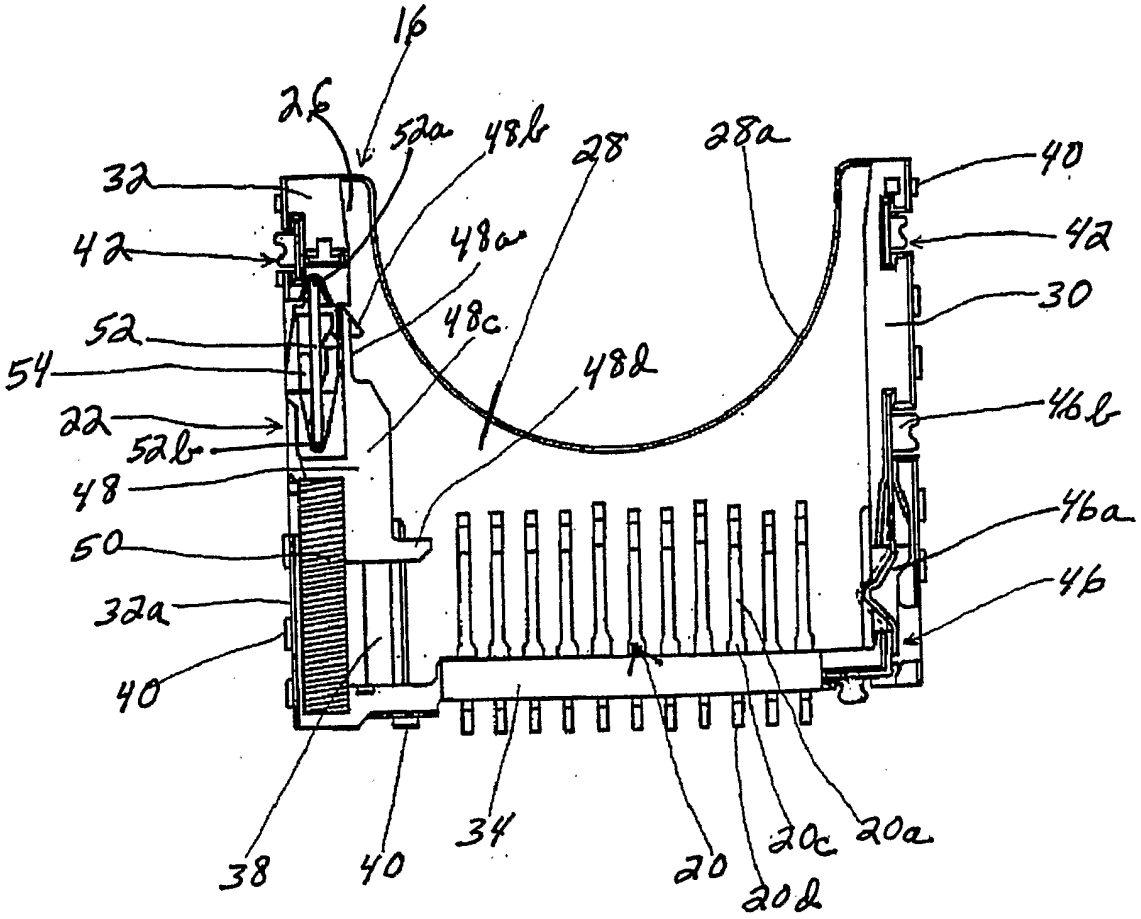
16
26
52a
48b
28
28a
40
32
42
48a
42
52
48c
30
54
48d
22
46b
52b
48
46a
50
46
32a
40
38
40
34
20
20c
20a
20d

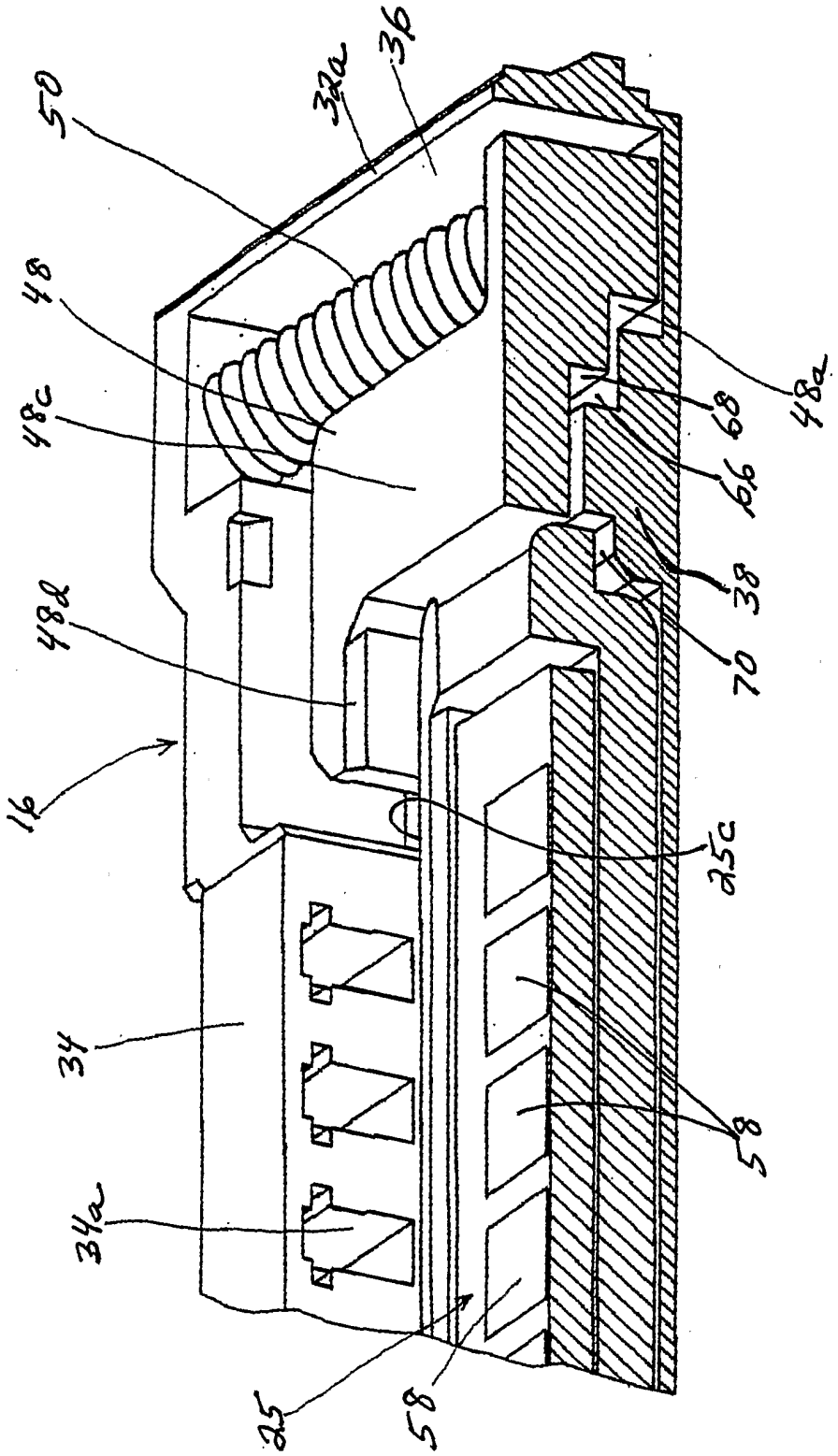

FIG. 7

FIG. 8

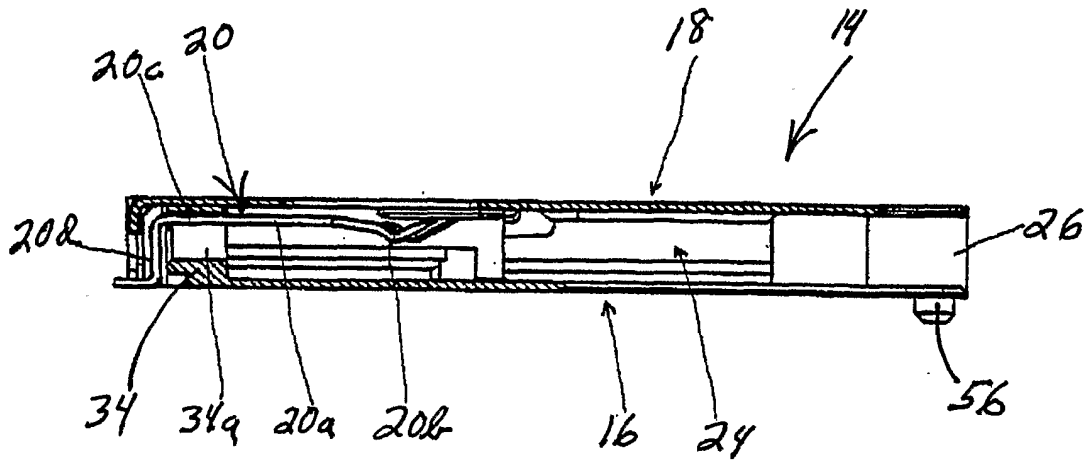

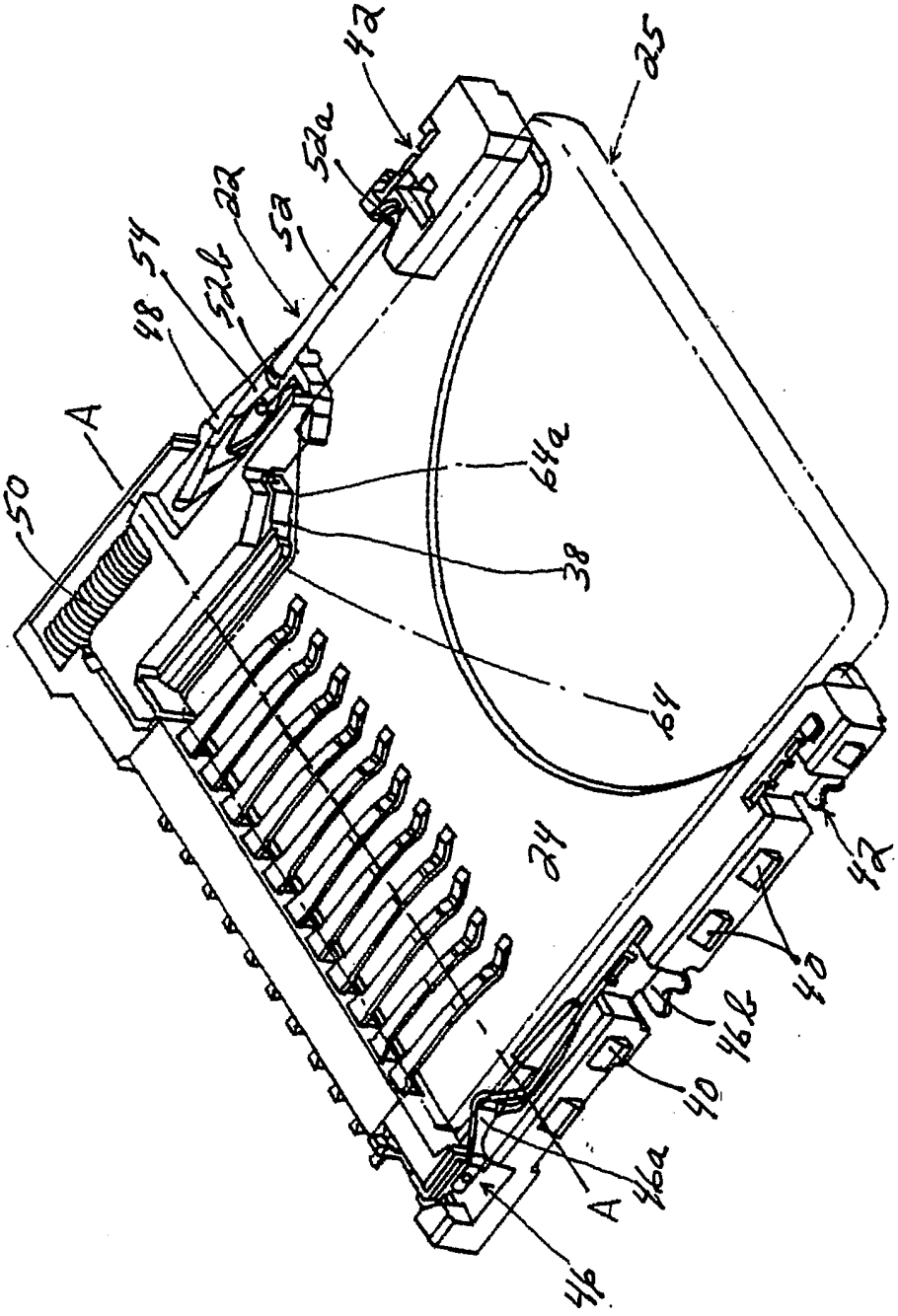

FIG. 9

FIG. 10

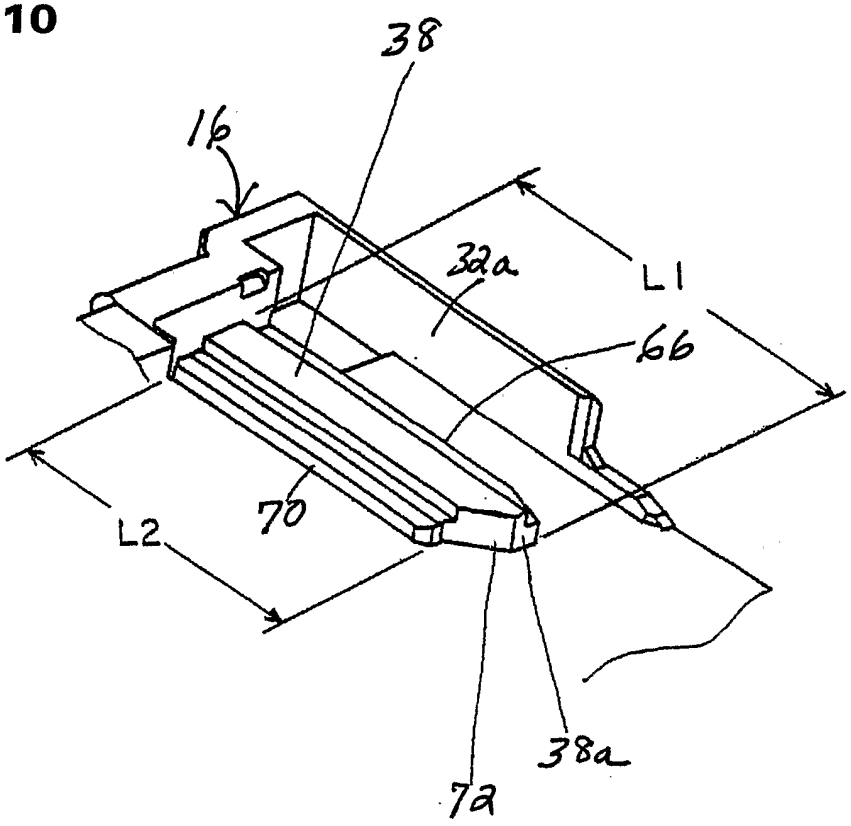

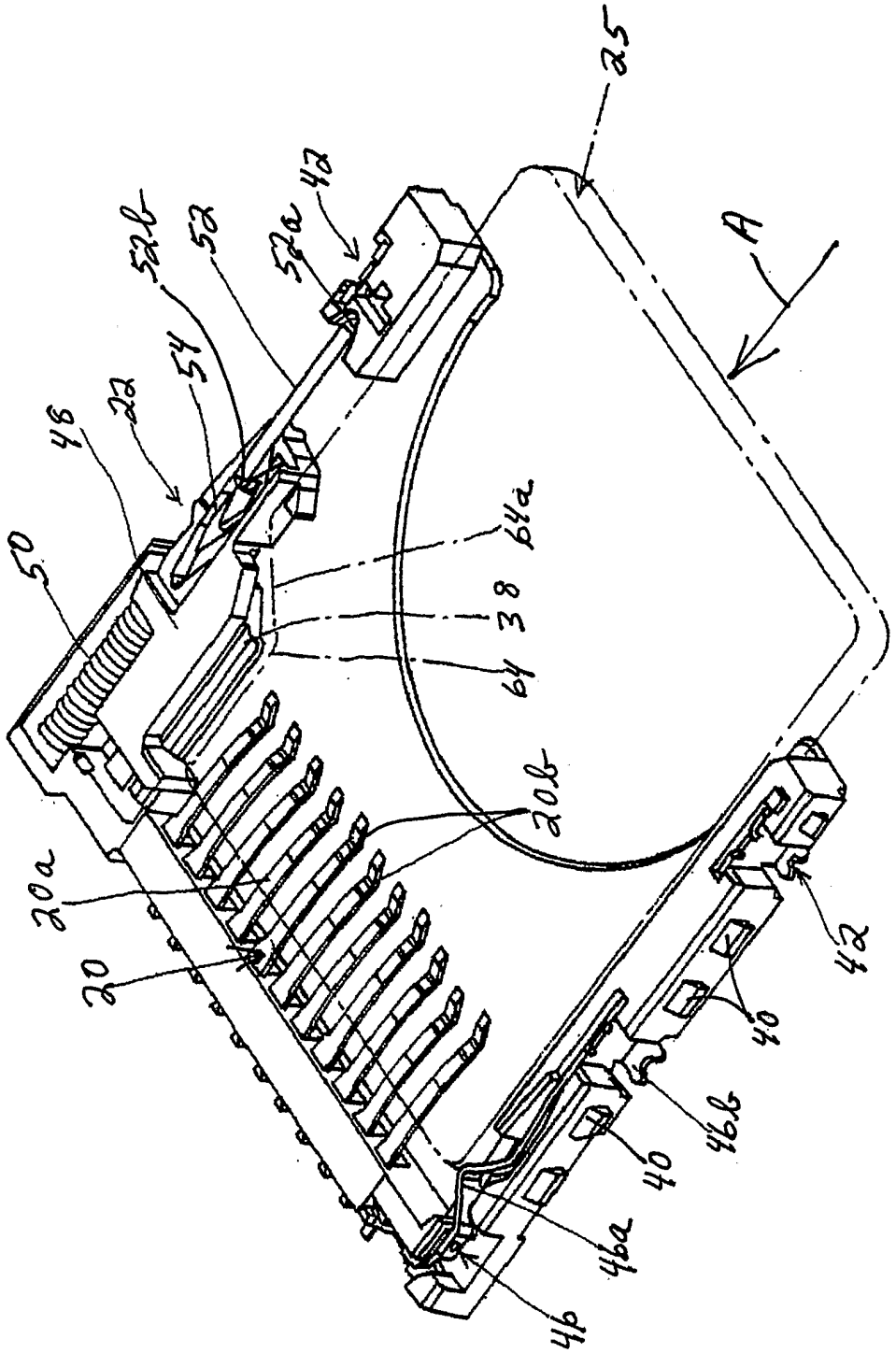

FIG. 11

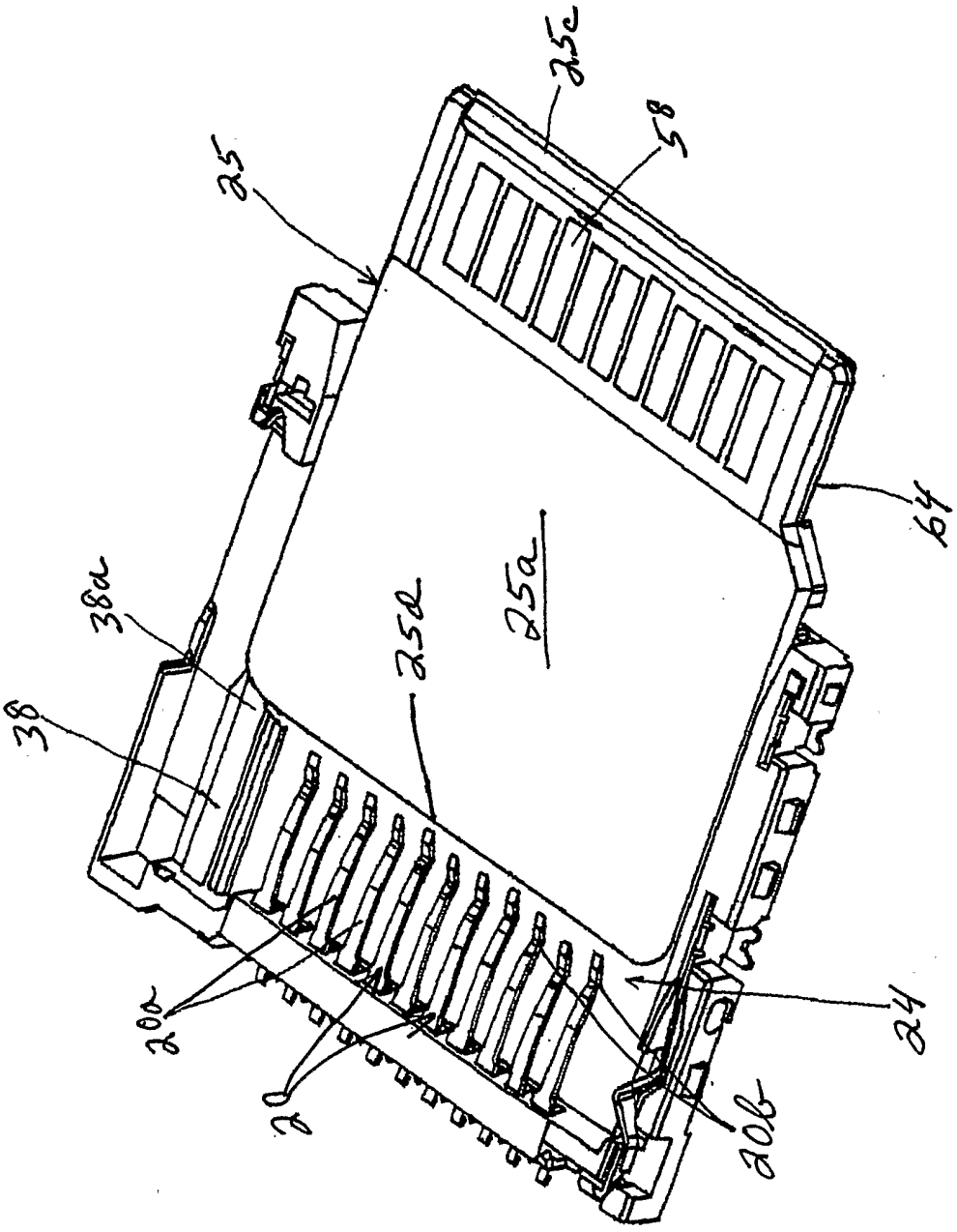

FIG. 12

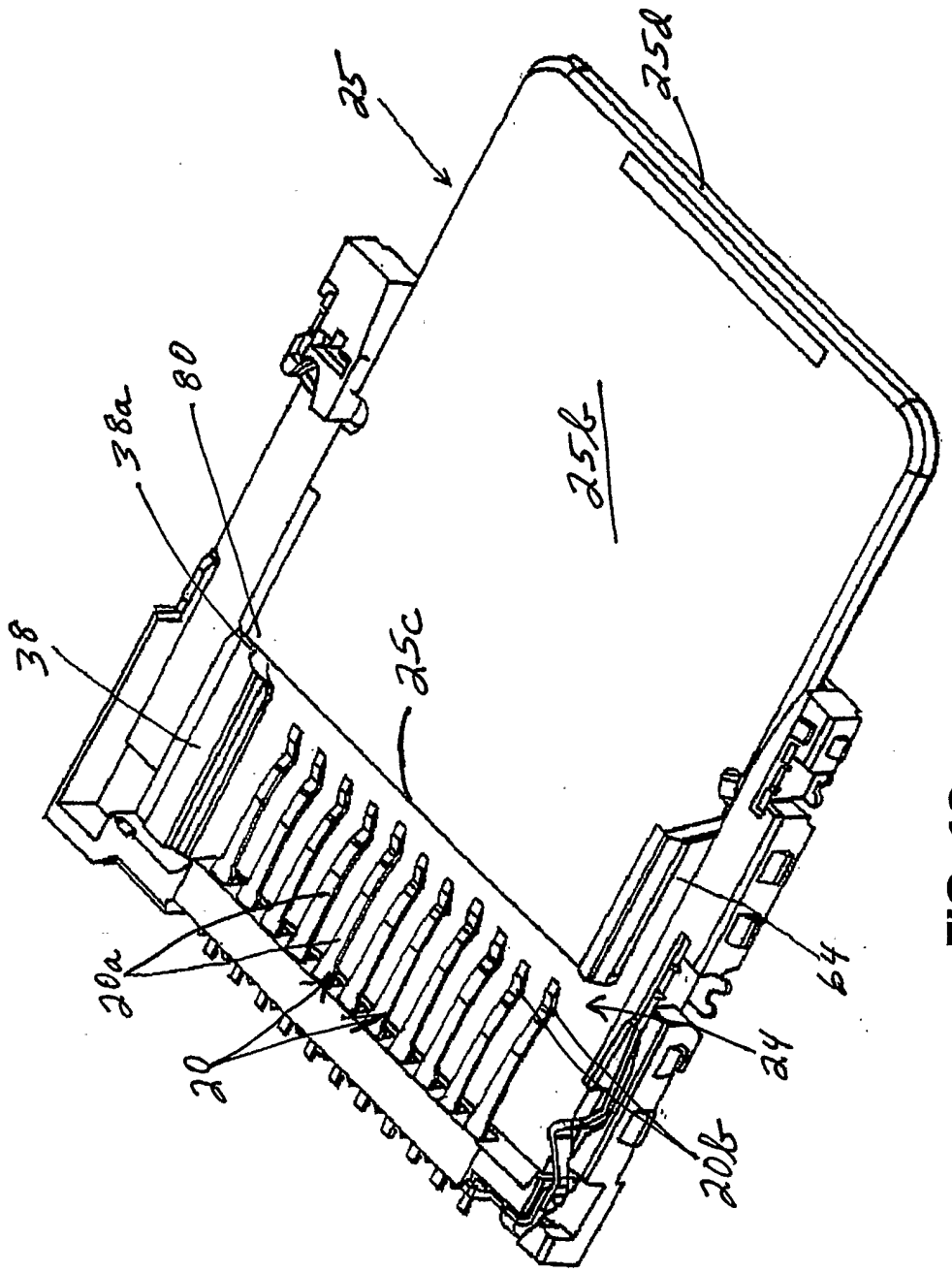

FIG. 13

INTERNATIONAL SEARCH REPORT

rnational Application No
PCT/US2004/000449

A. CLASSIFICATION OF SUBJECT MATTER
IPC 7 G06K7/00 H01R13/64 H04B1/38 H05K5/02 H02K5/22
F02M51/00

According to International Patent Classification (IPC) or to both national classification and IPC

B. FIELDS SEARCHED

Minimum documentation searched (classification system followed by classification symbols)
IPC 7 G06K H01R H04B H05K H02K F02M

Documentation searched other than minimum documentation to the extent that such documents are included in the fields searched

Electronic data base consulted during the international search (name of data base and, where practical, search terms used)
EPO-Internal, WPI Data

C. DOCUMENTS CONSIDERED TO BE RELEVANT

Category °	Citation of document, with indication, where appropriate, of the relevant passages	Relevant to claim No.
X	US 5 921 792 A (CHEN ROBERT) 13 July 1999 (1999-07-13) the whole document ---	1-16
X	US 5 451 168 A (SHUEY JOSEPH B) 19 September 1995 (1995-09-19) column 6, line 12 - line 17; figures column 11, line 20 - line 31 ---	1-16
A	US 5 440 448 A (OKONSKY CHRISTIAN G ET AL) 8 August 1995 (1995-08-08) column 6, line 49 - line 65; figures 3,6,7 ---	1-16
A	US 6 123 560 A (KOSEKI YOSHITSUGU ET AL) 26 September 2000 (2000-09-26) the whole document ---	1-16
	-/--	

[X] Further documents are listed in the continuation of box C.

[X] Patent family members are listed in annex.

° Special categories of cited documents :

"A" document defining the general state of the art which is not considered to be of particular relevance

"E" earlier document but published on or after the international filing date

"L" document which may throw doubts on priority claim(s) or which is cited to establish the publication date of another citation or other special reason (as specified)

"O" document referring to an oral disclosure, use, exhibition or other means

"P" document published prior to the international filing date but later than the priority date claimed

"T" later document published after the international filing date or priority date and not in conflict with the application but cited to understand the principle or theory underlying the invention

"X" document of particular relevance; the claimed invention cannot be considered novel or cannot be considered to involve an inventive step when the document is taken alone

"Y" document of particular relevance; the claimed invention cannot be considered to involve an inventive step when the document is combined with one or more other such documents, such combination being obvious to a person skilled in the art.

"&" document member of the same patent family

Date of the actual completion of the international search	Date of mailing of the international search report
26 May 2004	08/06/2004

Name and mailing address of the ISA	Authorized officer
European Patent Office, P.B. 5818 Patentlaan 2 NL - 2280 HV Rijswijk Tel. (+31-70) 340-2040, Tx. 31 651 epo nl, Fax: (+31-70) 340-3016	Heusler, N

INTERNATIONAL SEARCH REPORT

rnational Application No
PCT/US2004/000449

C.(Continuation) DOCUMENTS CONSIDERED TO BE RELEVANT

Category °	Citation of document, with indication, where appropriate, of the relevant passages	Relevant to claim No.
A	US 2002/137386 A1 (ABE KIYOSHI ET AL) 26 September 2002 (2002-09-26) the whole document	1-16
A	& JP 2001 160458 A (YAMAICHI ELECTRONICS CO LTD) 12 June 2001 (2001-06-12) cited in the application	1-16
P,A	US 6 511 350 B1 (SAKAMOTO TAKAHIRO ET AL) 28 January 2003 (2003-01-28) the whole document	1-16
A	& JP 2001 135417 A (YAMAICHI ELECTRONICS CO LTD) 18 May 2001 (2001-05-18) cited in the application	1-16
A	& YAMAICHI ELECTRONICS CO LTD: JAPANESE PATENT 3325865, 17 September 2002 (2002-09-17), cited in the application	1-16

INTERNATIONAL SEARCH REPORT

Information on patent family members

national Application No
PCT/US2004/000449

Patent document cited in search report		Publication date	Patent family member(s)		Publication date
US 5921792	A	13-07-1999	JP	7272793 A	20-10-1995
			CN	1113041 A ,B	06-12-1995
US 5451168	A	19-09-1995	EP	0721680 A1	17-07-1996
			JP	9505915 T	10-06-1997
			SG	47909 A1	17-04-1998
			WO	9510129 A1	13-04-1995
US 5440448	A	08-08-1995	NONE		
US 6123560	A	26-09-2000	TW	392950 Y	01-06-2000
US 2002137386	A1	26-09-2002	JP	3385252 B2	10-03-2003
			JP	2001160458 A	12-06-2001
			EP	1152492 A1	07-11-2001
			WO	0143235 A1	14-06-2001
US 6511350	B1	28-01-2003	JP	3325865 B2	17-09-2002
			JP	2001135417 A	18-05-2001