(No Model.) 3 Sheets—Sheet 1.

S. B. OPDYKE, Jr.

ELEVATOR.

No. 496,666. Patented May 2, 1893.

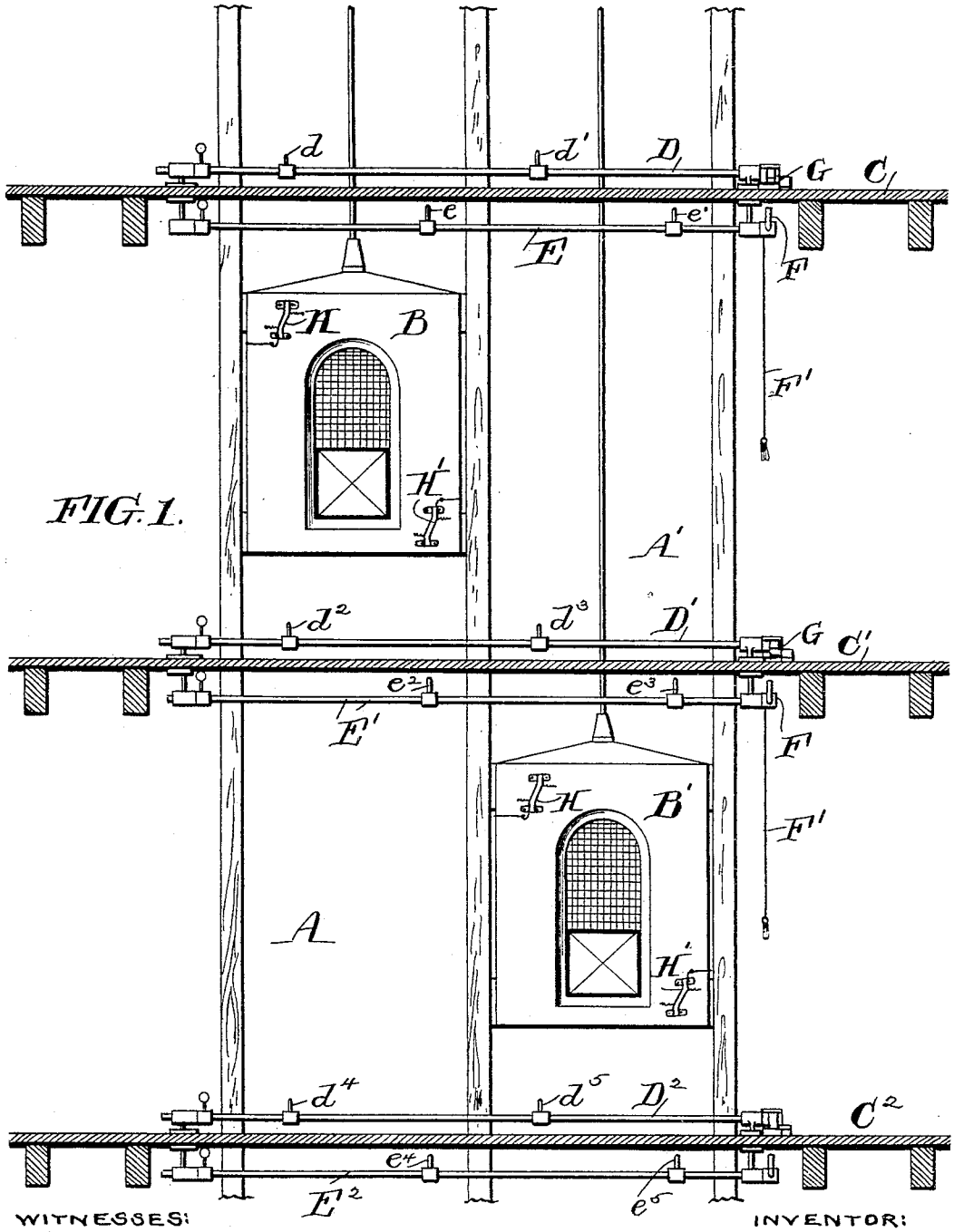

FIG. 1.

WITNESSES:
Henry Drury
Frank S. Brosen

INVENTOR:
Sherry B. Opdyke Jr.
by his atty.
P. P. Harding

THE NORRIS PETERS CO., PHOTO-LITHO., WASHINGTON, D. C.

(No Model.) 3 Sheets—Sheet 2.

S. B. OPDYKE, Jr.

ELEVATOR.

No. 496,666. Patented May 2, 1893.

FIG. 5.

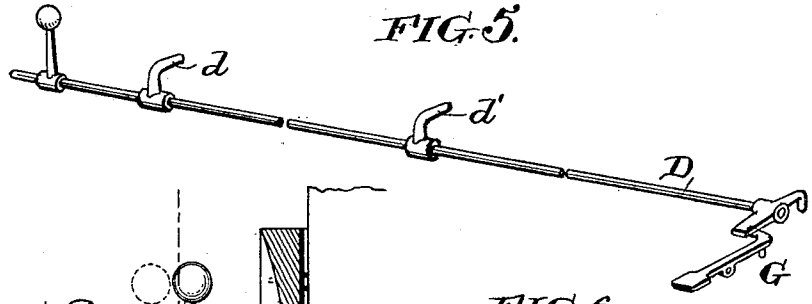

FIG. 2.

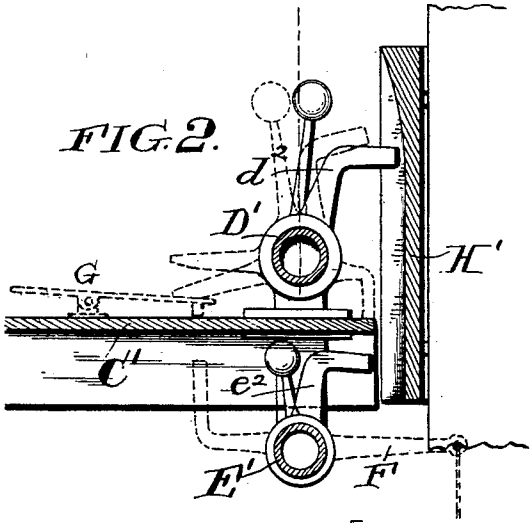

FIG. 6.

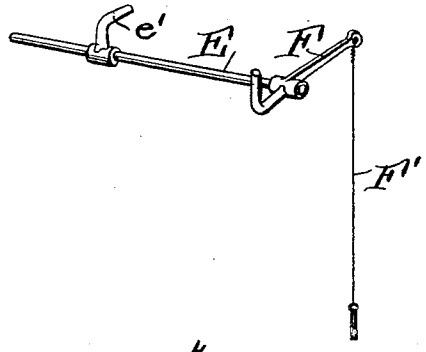

FIG. 3.

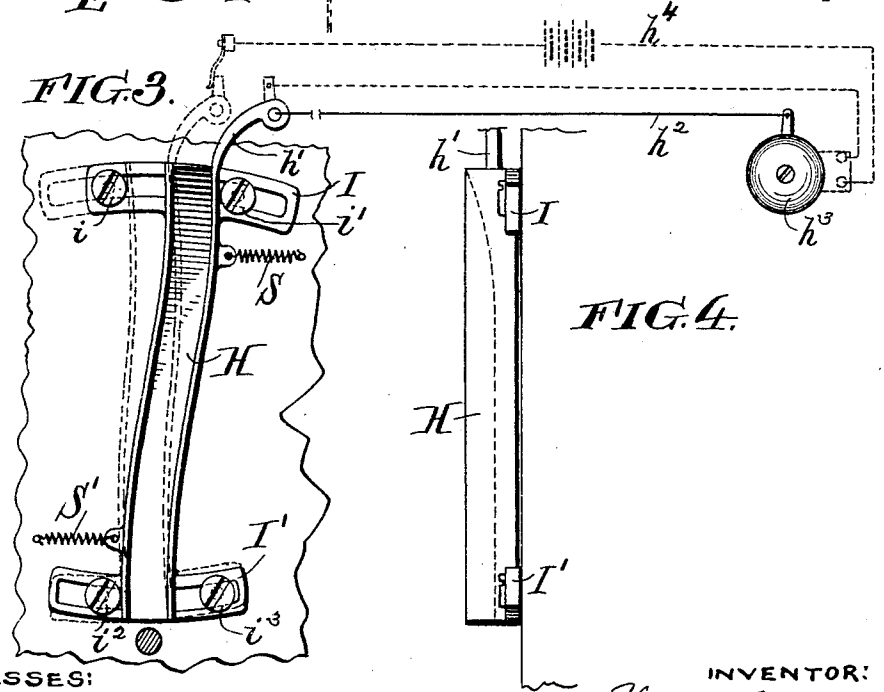

FIG. 4.

WITNESSES:
Henry Drury
Frank L. Bruce

INVENTOR:
Stacey B. Opdyke Jr.
by his atty
F. A. Harding

THE NORRIS PETERS CO., PHOTO-LITHO., WASHINGTON, D. C.

(No Model.)

3 Sheets—Sheet 3.

S. B. OPDYKE, Jr.

ELEVATOR.

No. 496,666.

Patented May 2, 1893.

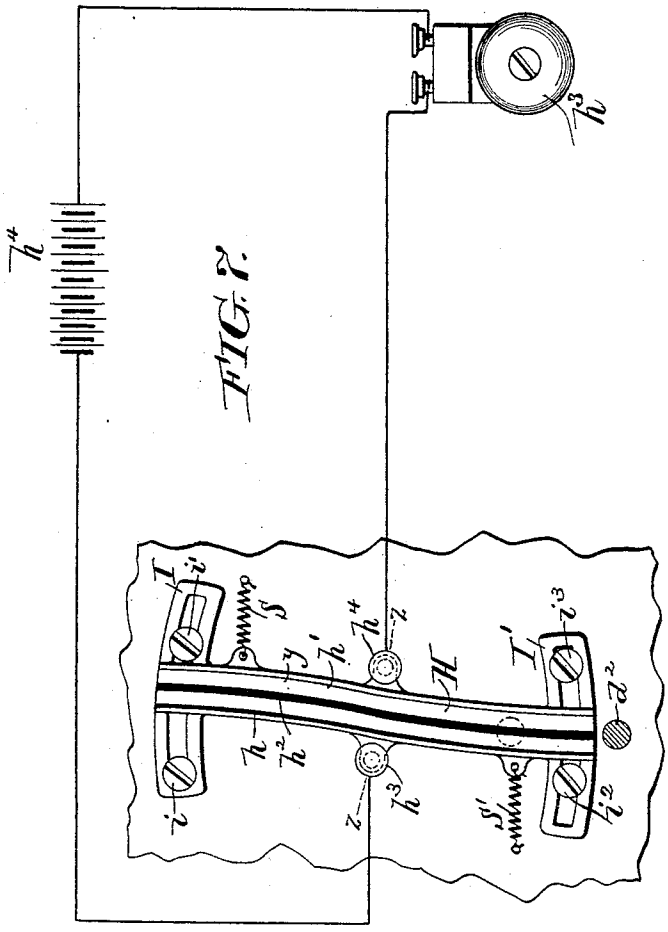

FIG. 7.

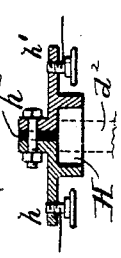

FIG. 8.

WITNESSES:

Henry Drury

Frank S. Busser

INVENTOR:

G. Stacy B. Opdyke Jr.

by his atty

George J. Harding

THE NORRIS PETERS CO., PHOTO-LITHO., WASHINGTON, D. C.

UNITED STATES PATENT OFFICE.

STACY B. OPDYKE, JR., OF PHILADELPHIA, PENNSYLVANIA.

ELEVATOR.

SPECIFICATION forming part of Letters Patent No. 496,666, dated May 2, 1893.

Application filed July 19, 1892. Serial No. 440,525. (No model.)

To all whom it may concern:

Be it known that I, STACY B. OPDYKE, Jr., a citizen of the United States, residing at Philadelphia, county of Philadelphia, and State of Pennsylvania, have invented a new and useful Improvement in Elevators, of which the following is a full, clear, and exact description, reference being had to the accompanying drawings, which form a part of this specification.

In the operation of elevators as at present carried on the person desiring to go up or down from any floor is obliged if there be more than one elevator car to find which elevator is the one approaching the landing in the direction the passenger desired to proceed, and then to ring a bell or wait until the elevator car approaches and call upon the operator to stop.

My invention has for its object to enable a passenger at any landing to indicate to the operator of the elevator car ascending or descending, dependent upon the direction the passenger desires to proceed, before the elevator car reaches the floor where the passenger is.

I will now describe an embodiment of my invention.

In the drawings—Figure 1 is a sectional elevation showing the elevator shafts, and their appurtenances. Fig. 2 is an enlarged sectional view on the line *x*—*x* Fig. 1 showing the cam about to engage with one of the pins on the rock shaft. Fig. 3 is an enlarged front elevation of the cam way and signaling apparatus. Fig. 4 is a side elevation of the cam way. Fig. 5 is a detached perspective view of the rock shafts. Fig. 6 is a detached perspective view of a portion of the other rock shafts. Fig. 7 is a modified form of connection between the pin and the signal. Fig. 8 is a section on line *z*—*z*, Fig. 7.

A A′ are two elevator shafts and B B′ are the elevator cars or cages which move in said shafts respectively.

C C′ C^2 are three floors above the bottom of the elevator shaft. At a point slightly above each floor are the shafts D D′ D^2, and at a point slightly below each of these floors are the shafts E E′ E^2 respectively. Upon the shaft D at points opposite each of the shafts A and A′ respectively are pins *d d′* and in the same manner upon the shaft D′ are the pins d^2 d^3, and in the same manner upon the shaft D^2, are the pins d^4 d^5, and upon the shafts E are the pins *e e′*, and upon the shaft E′ are the pins e^2 e^3 and upon the shaft E^2 are the pins e^4 e^5. Shafts D′ D′, E^2 E^2 are supported in bearings and adapted to be rocked. These shafts D and E, D′ E′, D^2 E^2 are shown in detail in Figs. 5 and 6 where they are marked D and E. Connected to the end of the shaft E is the arm F which connects to the cord F′ which is of length sufficient to be operated from the floor C′, and in the same manner the shafts E′ and E^2 are connected to cords corresponding as described with reference to E. Attached to the shaft D (and in the same manner D′ D) is the treadle lever G, which is adjacent to the floors C C′ C^2 respectively, so that by bringing the foot upon the lever the shaft D is caused to be rocked, and by pulling the cord F′, the shaft E is caused to be rocked. Upon each of the elevator cars or cages B and B′ are cams H H′, said cams H being in line with the pins *d d′* d^2 d^3 d^4 d^5, and the cams H′ are in line of movement with the pins *e e′* e^2 e^3 e^4 e^5. Both the cams H and H′ are secured to the elevator cars or cages B B′ by means of the slotted links I I′ to which slotted links they are either secured or formed together with.

i i′ i^2 i^3 are screws which secure the slotted link to the frame of the elevator cars or cages B B′ respectively.

The cam way is shown in detail in Fig. 4 which shows the same at one end higher than at the other end. At one end of said cams H H′ are the arms *h h′*, which arms are connected by a cord h^2 with the bell h^3. In place of using the cord as a connection with the bell, the arms *h h′* may be made a part of an electric circuit h^4, in which the bell clapper is also inserted, as clearly shown in dotted lines Fig. 3. Each one of the rock shafts D D′ D^2, E E′ E^2, is provided with a counterweight and with pins equal in number to the elevator cars, two being shown in the drawings, as shown clearly in Figs. 1, 2 and 5.

As may be seen from an inspection of Fig. 1, the cams H and H′ are of the same construction with the exception that their posi-

tion is reversed; that is, the upper portion of the cam H corresponds to the lower portion of the cam H′, or rather, is in the position of the lower portion of the cam H′, the cams being merely reversed. Thus, the cam H is adapted to be operated by the pins d, d', d^2, d^3, d^4, d^5, as illustrated in Fig. 3, and the cam H′, as shown in Fig. 1 is merely the cam H reversed. Connected to the cams H and H′ at their upper and lower ends are the springs S S′. These shafts D, D′, D², are for indicating the ascending elevator car, while the shafts E, E′, E² are for indicating the descending elevator. Taking the left hand elevator car which is descending, the passenger upon the floor C² desires to have the elevator car stop. He pulls the cord F′, which rocks the shaft E′, bringing the pin e^2 in alignment with the cam H′, and when the elevator car reaches that point the pin enters the cam ways moving the cam over as shown in dotted lines, and thereby making either an electric circuit or pulling the cord h^2 and ringing the bell, thereby indicating to the operator that on the next floor below there is a passenger to be taken on. The construction of the cam way, as hereinbefore described, causes the pin when it reaches the ascending portion of said cam way to turn upon its pivot point, so that when said pin has reached the highest point of the cam way, the pin is disengaged from alignment with the cam way.

Taking as the ascending elevator, for instance, the elevator car on the right hand side, if a passenger on the floor C′ desires to enter said elevator and ascend, he places his foot upon the treadle G, causing the pin to rock in shaft d^3 to come in alignment of the cam way H, when the said operation as before described taking place with the cam H′ takes place with the cam H and the operator is apprised before he reaches the floor C′ of the fact that a passenger is there desiring to enter the elevator car. The positions of the ascending rocking shafts D D′ D² is at a point so slightly above the floor that the operator has ample time for the indication of the person upon that floor desiring to ascend to stop the elevator car while the ascending rock shaft E′ E² is in such position above the floor to which it relates that the operator has ample time after receiving the indication to stop the elevator and allow the person to enter. When the cam ways are moved out by the pin as shown in the dotted lines, they are moved against the spring S, which when the pin is released from the way brings back the cam to its normal position. If, for any reason the counter-weights were not used for the pins or they failed to return to their normal position, the ascending pin could then operate upon its corresponding cam way when the elevator was ascending, but would not operate upon it when descending for the upper portion of the ascending cam is out of alignment with the pin which would cause said pin merely to strike the side of the cam which would move it in the direction opposite and against the spring without indicating by the bell. The same is true of the descending cam and its corresponding pin.

If desired, instead of making the electrical connection between the cam and its signal, as shown in the drawings, heretofore described, I can make my cam in two parts, h h' separated by a strip of insulation, h^2, as shown in Fig. 7, and provide an electrical circuit, h^4, which is connected with the signal, h^3, and one wire going to the binding post h^3 on the strip h, the other going to the binding post, h^4 on the strip h', the pin d^2 being of size sufficient to cover and extend beyond the insulation, h^2, and touch the two parts, h, h', of the cam, the pin being of material adapted to conduct electricity. When the pin is operated as before described and brought into line with the cam it will pass along the cam upon the insulated surface touching the two portions, h h' of the cam H′ and thereby complete the circuit from the source of current supply to the indicator so that when the pin passes over the cam the electrical circuit is completed and the signal given.

I do not intend to limit myself to the specific form of construction herein shown, as it is evident that the details may be modified in many ways without departing from my invention; nor do I intend to limit myself to the means shown for operating the pins except wherein the same are specifically set out.

Having now fully described my invention, what I claim, and desire to protect by Letters Patent, is—

1. In combination with an elevator car, a cam secured to said car and adapted to swing, a signal, a connection between said cam and signal, a shaft adapted to rock, a pin upon said shaft, and means to rock said shaft.

2. In combination with an elevator car of a cam secured to said car and adapted to swing, said cam having a raised portion, a signal, a connection between said cam and the signal, a shaft adapted to rock, a pin upon said shaft and means to rock said shaft.

3. In combination with an elevator car of a cam secured to said car and adapted to swing, a signal, a connection between said cam and signal, a shaft adapted to rock, a pin upon said shaft, a counter-weight upon said shaft, and means to rock said shaft.

4. In combination with an elevator car of a cam secured to said car and adapted to swing, said cam having a raised portion, a signal, a connection between said cam and the signal, a shaft adapted to rock, a pin upon said shaft, a counter-weight upon said shaft, and means to rock said shaft.

5. In combination with a series of elevator cars, a cam secured to each of said elevator cars and adapted to swing, signals and a connection between each cam and its correspond-

ing signal, a shaft adapted to rock, pins upon said shaft equal in number with said cams and means to rock said shaft.

6. In combination with a series of elevator cars, a cam secured to each of said elevator cars and adapted to swing, each of said cams having a raised portion, signals, and a connection between each cam and its corresponding signal, a shaft adapted to rock, pins upon said shaft, equal in number with said cams, and means to rock said shaft.

7. In combination with a series of elevator cars, a cam secured to each of said elevator cars and adapted to swing, signals and a connection between each cam and its corresponding signal, a shaft adapted to rock, pins upon said shaft, equal in number with said cams, counter-weight upon said shaft and means to rock said shaft.

8. In combination with a series of elevator cars, a cam secured to each of said elevator cars and adapted to swing, each of said cams having a raised portion, signals, and a connection between each cam and its corresponding signal, a shaft adapted to rock, pins upon said shaft, equal in number with said cams, counter-weight upon said shaft, and means to rock said shaft.

9. In combination with an elevator car of two cams secured to said car, the cams being set reverse of each other and adapted to swing, signals connections between said signals and cams, shafts adapted to rock, a pin upon one shaft adapted to co-operate with one of the cams and a pin upon the other shaft adapted to co-operate with the other cam and means substantially as described to rock each of said shafts.

10. In combination with an elevator car of two cams secured to said car, the cams being set reverse of each other and adapted to swing, each of said cams having a raised portion, signals, connections between said signals and cams, shafts adapted to rock, a pin upon one shaft adapted to co-operate with one of the cams, and a pin upon the other shaft, adapted to co-operate with the other cam and means substantially as described to rock each of said shafts.

11. In combination with an elevator car of two cams secured to said car the cams being set reverse of each other and adapted to swing, signals, connections between said signals and cams, shafts adapted to rock, a pin upon one shaft adapted to co-operate with one of the cams and a pin upon the other shaft adapted to co-operate with the other cam, counter-weights upon said shafts, and means substantially as described to rock each of said shafts.

12. In combination with an elevator car of two cams secured to said car, the cams being set reverse of each other and adapted to swing, each of said cams having a raised portion, signals, connections between said signals and cams, shafts adapted to rock, a pin upon one shaft adapted to co-operate with one of the cams, and a pin upon the other shaft adapted to co-operate with the other cam, counter-weights upon said shafts, and means substantially as described to rock each of said shafts.

13. In combination with a series of elevator cars of two cams secured to each elevator car, the cams being set reverse of each other, and adapted to swing, signals, and a connection between each cam and a signal, shafts adapted to rock, pins upon one shaft adapted to co-operate with the cams, pointing in one direction, pins upon the other shaft adapted to co-operate with cams pointing in the other direction, and means to rock each of said shafts.

14. In combination with a series of elevator cars of two cams secured to each elevator car, the cams being set reverse of each other and adapted to swing, each of said cams having a raised portion, signals, and a connection between each cam and a signal, shafts adapted to rock, pins upon one shaft adapted to co-operate with the cams pointing in one direction, pins upon the other shaft adapted to co-operate with cams pointing in the other direction, and means to rock each of said shafts.

15. In combination with a series of elevator cars of two cams secured to each elevator car, the cams being set reverse of each other and adapted to swing, signals, and a connection between each cam and a signal, shafts adapted to rock, pins upon one shaft adapted to co-operate with the cams pointing in one direction, pins upon the other shaft adapted to co-operate with cams pointing in the other direction, counter-weights upon said shafts, and means to rock said shafts.

16. In combination with a series of elevator cars of two cams secured to each elevator car, the cams being set reverse of each other and adapted to swing, each of said cams having a raised portion, signals, and a connection between each cam and a signal, shafts adapted to rock, pins upon one shaft adapted to co-operate with the cams pointing in one direction, pins upon the other shaft adapted to co-operate with cams pointing in the other direction, counter-weights upon each of said shafts, and means to rock each of said shafts.

17. In combination, with an elevator car, a cam secured to said car and adapted to swing, a signal, a connection between said cam and signal, a pin, and means substantially as described to bring said pin into alignment with said cam.

18. In combination, with an elevator car, cams secured to said elevator and adapted to swing, signals, a connection between each cam and its corresponding signal, a pin corresponding to each cam, and means substantially as described to bring either of said pins into alignment with its corresponding cam.

19. In combination, with a series of elevator cars, cams secured to each of said elevator cars and adapted to swing, signals a connection between each cam and its corresponding

signal, a pin corresponding to each cam, and means substantially as described to bring said pins into alignment with their corresponding cams.

20. In combination, with a series of elevator cars, two cams secured to each elevator car, the cams being set reverse of each other and adapted to swing, signals, a connection between each cam and signal, pins corresponding in number to said cams, and means substantially as described to bring said pins into alignment with their corresponding cams.

In testimony of which invention I have hereunto set my hand.

STACY B. OPDYKE, JR.

Witnesses:
GEO. W. REED,
FRANK S. BUSSER.