# United States Patent [19]

**Goldberg**

[11] **3,744,828**

[45] **July 10, 1973**


[54] **LID LATCH**


[75] Inventor: **Norman P. Goldberg,** Denver, Colo.

[73] Assignee: **Goldberg Brothers, Inc.,** Denver, Colo.



[22] Filed: **July 29, 1971**

[21] Appl. No.: **167,355**

[52] **U.S. Cl.** ..... **292/59,** 206/52 F

[51] **Int. Cl.** ..... **E05c 5/04**

[58] **Field of Search** ..... 292/58, 59, 62, 68, 292/69; 206/52 F; 220/55 F, 55 D



[56] **References Cited**

UNITED STATES PATENTS

1,792,537 2/1931 Irwin ..... 292/62 X

FOREIGN PATENTS OR APPLICATIONS

802,714 12/1968 Canada ..... 206/52 F



*Primary Examiner*—Robert L. Wolfe

*Attorney*—Anderson, Spangler & Wymore



[57] **ABSTRACT**

This invention relates to a latch for container lids and the like characterized by a spring-returned plunger mounted within aperture in a marginal plunger-carrying ear for both rotational and reciprocating motion. The plunger includes a head of rectangular cross section which, when properly oriented, will pass through an opening therefor provided in a latch-receiving ear carried by the mating container part. This plunger head has the surface thereof adjoining its shank shaped to define a ridge adapted upon being depressed and rotated a quarter turn to seat within a transversely-extending notch in the opposing surface of the ear.


**6 Claims, 7 Drawing Figures**

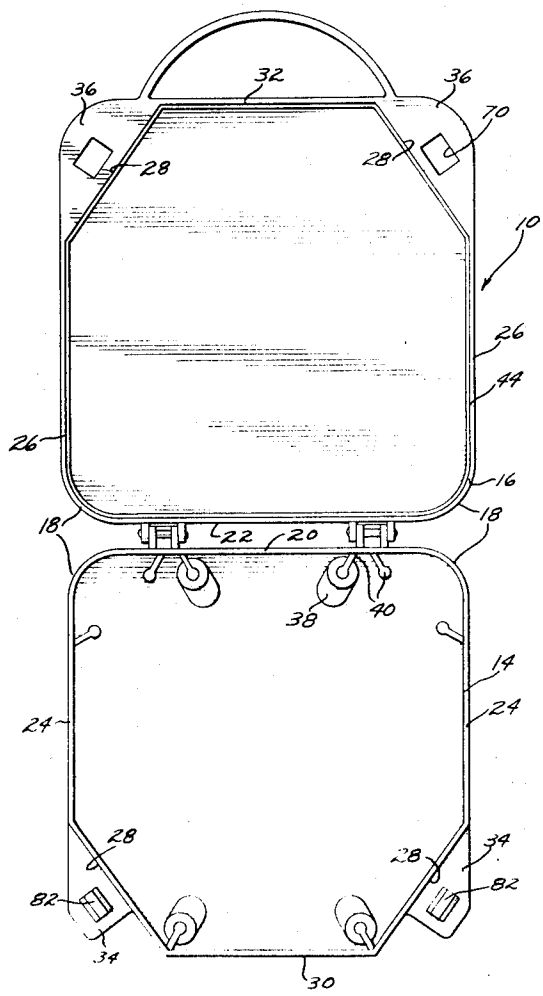

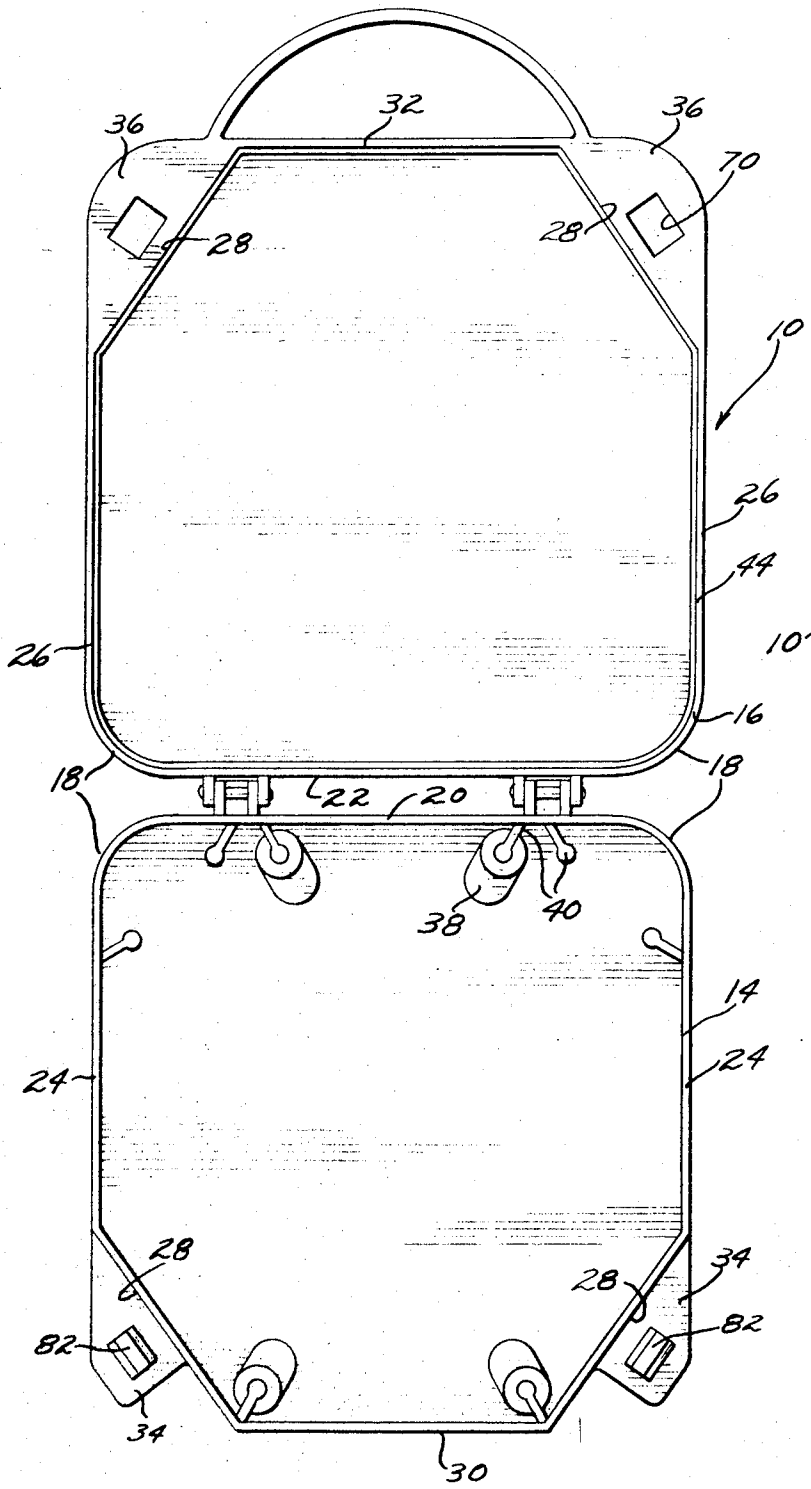


FIG. 1.

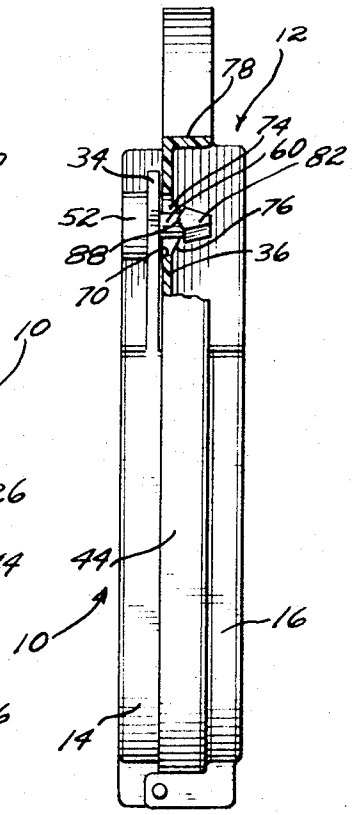


FIG. 2.

INVENTOR
NORMAN P. GOLDBERG
BY
Anderson, Spangler & Wyman
ATTORNEY

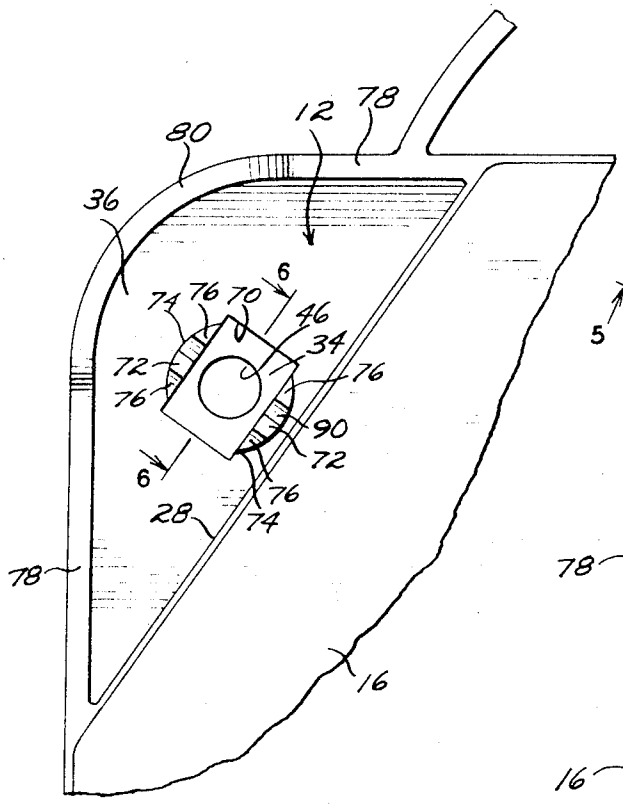


FIG. 3.

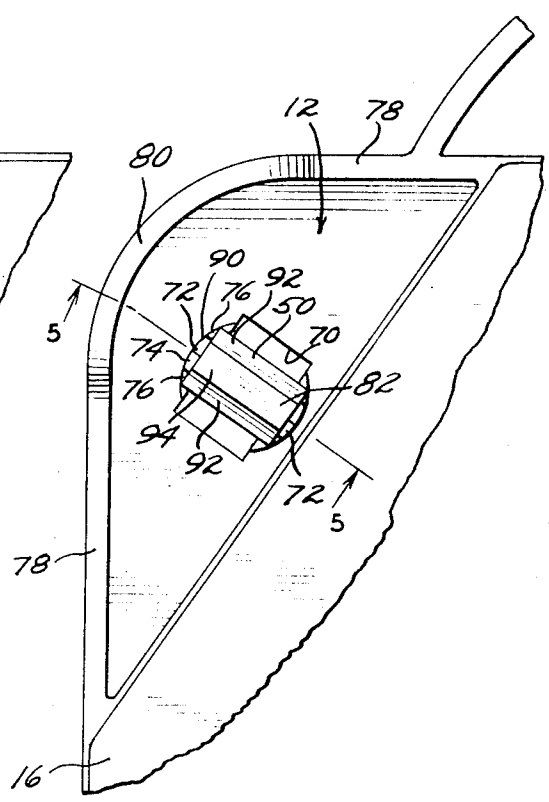


FIG. 4.

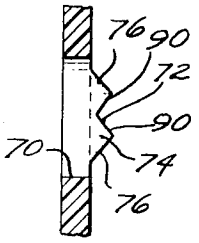


FIG. 6.

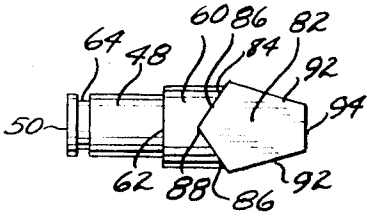


FIG. 7.

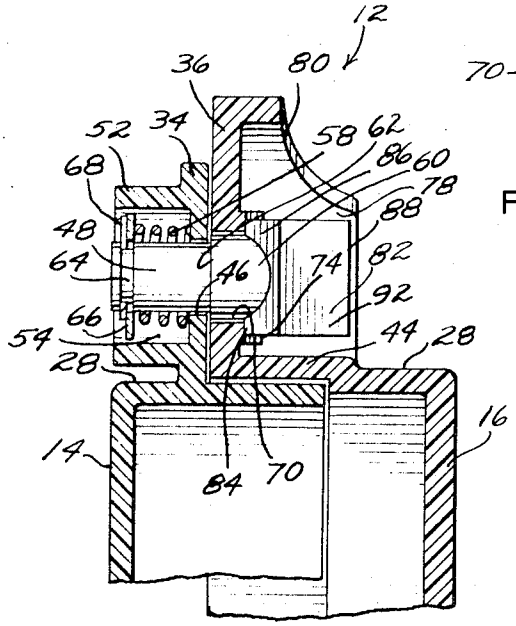


FIG. 5.

INVENTOR
NORMAN P. GOLDBERG
BY
Anderson, Spangler & Wyman
ATTORNEY

# LID LATCH

In our U.S. Pat. No. 3,552,551, we show a shipping and carrying case for film reels that is quite similar in overall design to the one illustrated herein, the main difference being in the mechanism used to latch the hinged lid closed. The earlier configuration employed a latch having a bifurcated end portion defining a pair of springable arms that would cam toward one another as they entered a rectangular aperture in a latch-receiving flange of the mating case part. Once through the aperture, the legs would spring apart and downwardly-facing shoulders carried thereby would releasably lock atop the portions of the flange bordering the aperture.

Several problems arose with the aforementioned latch which necessitated the development of the improved one forming the subject matter of the instant application. To begin with, the arms of the bifurcated latch member had a tendency to break off if the user was not careful when pinching them together to release it. Once this happened, the lid was insecurely fastened and, if it came open, a valuable reel of motion picture film could be lost or damaged.

Even more significant than the breakage of the latch element was its loss. The flanges depending from the lid and body portions of the case each contained rectangular openings of substantially the same size that registered with one another when the lid was closed. This meant that when the legs of the latch were squeezed together to free the shoulders, it could pass right on down and out through both registering openings and be lost. Here again, when this happened, the case became almost useless. Since the prime function of these cases was, and still is, that of a shipping container, the distributor of the film was left with no way of getting his film back from the renter or user thereof.

It has now been found in accordance with the teaching of the instant invention that these and other shortcomings of our previous carrying case latch can be overcome by the simple, but unobvious, expedient of substituting a latch member that remains always permanently attached to a part of the case and both reciprocates and rotates as it moves between the latched and unlatched positions thereof instead of relying upon springable legs. Such a unit has the advantage of being much more reliable while, at the same time, remaining just about as simple to make and to use. The shank of the plunger is recessed up inside a pocket in the body where it is most unlikely that it could ever be actuated accidentally. With the exception of a coiled metal compression spring, no part of the latch undergoes deformation during the latching and unlatching sequence, therefore, the breakage problem is virtually nonexistent. Springs of this sort can, of course, undergo repeated actuations millions of times without failing and, even if it were to break, its location and function in the instant latch is such that the unit would still operate much as if nothing had happened.

It is, therefore, the principal object of the present invention to provide a novel and improved lid latch for containers and the like.

A second objective of the within-described invention is the provsion of a latch that is ideally suited for use as a releasable fastener on film reel shipping and carrying cases.

Another object of the invention herein disclosed and claimed is to provide a lid-securing latch that requires



limited simultaneous axial and rotational movement in order to release or latch same and accidential actuation is, therefore, virtually impossible.

An additional objective is to provide a carrying case latch that always remains permanently connected to either the lid or body of the container, and therefore, cannot be lost or misplaced.

Further objects of the invention are to provide a container lid latch that is simple, inexpensive, easy to operate, compact, rugged, versatile and even decorative in appearance.

Other objects will be in part apparent and in part pointed out specifically hereinafter in connection with the description of the drawings that follows, and in which:

FIG. **1** is a top plan view showing a film reel carrying case equipped with the lid latch of the present invention in open position;

FIG. **2** is a side elevation of the reel case in closed position, portions of a corner of the lid having been broken away to better reveal the plunger;

FIG. **3** is a fragmentary detail to an enlarged scale showing a corner of the lid with the plunger removed and the body visible through the rectangular aperture therein;

FIG. **4** is a fragmentary detail to the same scale as FIG. **3** and showing the same corner of the lid but with the latch element rotated into latched position;

FIG. **5** is a still further enlarged fragmentary section taken along line **5—5** of FIG. **4**;

FIG. **6** is a fragmentary section to the same scale as FIG. **5** taken along line **6—6** of FIG. **4**; and,

FIG. **7** is a view showing the latch member by itself to the same scale as FIGS. **5** and **6**.

Referring next to the drawings for a detailed description of the present invention and, initially, to FIGS. **1** and **2** for this purpose, reference numeral **10** has been chosen to broadly designate the container that carries the improved latch, the latter having been similarly designated by reference numeral **12**. Container **10**, in the particular form shown, constitutes a film reel shipping case of the same general type revealed in my previously-identified patent, having a body **14** and a lid **16** hingedly attached to the body along one edge. The body and lid are both generally rectangular with rounded corners **18** connecting the hinged edges **20** and **22** thereof with the side margins **24** and **26**, respectively. What will be denominated here as the front corners **28** connect the side margins and front walls **30** and **32** are truncated as shown although integrally-formed ears **34** and **36** project therefrom.

Friction-type clips **38** detachably mounted on integral webs **40** inside the body are used to hold the film reel (not shown) while the lid is closed. All of the foregoing features are found in my earlier film reel shipping case with the exception of the latch assembly **12** to which detailed reference will be made presently.

Since lid **16** is bordered by an outwardly-offset marginal skirt **44** that telescopes down over the walls of the body **14** in the manner shown in FIGS. **2** and **5** to which reference will now be made, ear **34** carried by the truncated corners of the latter element must be offset beneath its free edge in order to accommodate this skirt. Ear **36** projecting from the truncated corner of the lid **16**, on the other hand, emerges from the free edges of the skirt and, in the closed position of the case, lies in

face-to-face essentially parallel relation to the corresponding plunger-carrying ear 34 on the body.

Ear 34 contains a circular opening 46 sized to loosely receive the shank 48 of the plunger member 50 for both reciprocating and rotational movement relative thereto. This opening is bordered by a downwardly-projecting circular wall 52 that shields the plunger element 50 and prevents it from being accidentally raised up, rotated or otherwise actuated. This encircling wall 52 is spaced radially beyond the margins of the opening 46 thus cooperating with the plunger-carrying ear 34 to produce a socket 54, the bottom 56 of which defines an abutment upon which to seat compression spring 58.

Next, referring to FIGS. 5 and 7, it will be seen that shank 48 of the plunger member 50 includes an enlarged generally frusto-conical section 60 separated from the latter by a downwardly-facing shoulder 62 that abuts the top surface of plunger-carrying ear 34 adjacent opening 46. The shank 48 also includes an annular groove 64 that carries a washer-like spring abutment 66 and a horseshoe-shaped spring lock nut 68. Spring 58 has the plunger shank 48 passing through the center thereof as shown in FIG. 5. The action of this spring between spaced abutments 58 and 66 is, of course, to normally bias shoulder 62 down against the top surface of the plunger-carrying ear 34.

Next, with particular reference to FIG. 3–6, inclusive, it can be seen that the plunger-receiving ear 36 on the lid is provided with a rectangular aperture 70, the center of which coincides with the center of the circular opening 46 in the plunger-carrying ear 34 although it is a good deal larger than the latter. Bordering this aperture 70 along the sides thereof are a pair of upwardly-facing transversely-aligned notches 72 recessed into the top surface of a pair of upstanding integrally--formed bosses 74. On opposite sides of each notch 72 are oppositely inclined -cam-forming ramps 76 that cooperate with said notch to define a "stepped" configuration that is most clearly revealed in FIG. 6.

The above-described bosses 74 with their notches and cam-forming ramps are located on the top surface of plunger-receiving ear 36 of the lid 16 when the latter is in closed position atop the body 14. This upwardly-facing exposed surface is enclosed by an upstanding marginal rim 78 that forms a round-cornered juncture between the sidewall 28 and the front endwall 32. Rim 78 is, however, cut-away at the corner to produce a wide, yet fairly shallow, notch 80 sized to admit the thumb and forefinger of the operator who wishes to grasp the head 82 of the plunger and turn it between its latched and unlatched positions.

In FIGS. 4, 5 and 7 to which reference will now be made, it can be seen that head 82 of the plunger 50 has a maximum horizontal or transverse cross-sectional shape which takes the form of a rectangle sized to barely pass freely through aperture 70 in ear 36. Thus, when head 82 is passed through aperture 70 up onto the top of plunger-receiving ear 36 of the lid and rotated a quarter turn into the position in which it is shown in FIGS. 4 and 5, it will no longer pass back down through said aperture. The laterally-projecting end portions 84 of the head 82 that emerge from opposite sides of enlarged section 60 of the plunger are shaped to define downwardly and inwardly oppositely-inclined cam surfaces 86 that intersect one another in an edge 88 adapted to seat within the transversely-aligned nothces 72 in the bosses 74. Now, in order for edge 88 of the plunger head to enter these nothces, the plunger must be raised up against the bias exerted thereon by compression spring 58 and rotated a quarter of a turn. Rather than press plunger up from the bottom, this latching thereof is most easily accomplished by grasping the head 82 thereof between the thumb and forefinger and turning it 90°. As this occurs, two of the four opposed pairs of cam surfaces 76 and 86 on the boss and plunger head will engage one another and cam the plunger upward axially as it turns until edge 88 can drop into notch 72. It depends, of course, upon the direction of rotation of the plunger which of the four complementary sets of cam surfaces will become functional and operative. If one wished to always turn the plunger in the same direction to latch it and in the opposite direction to unlatch it, one pair of complementary cam surfaces could be eliminated altogether. In fact, cam surfaces need not be provided on both sides of the plunger head and ear aperture 70 as a single complementary set will suffice nicely to latch the plunger in place provided that care is exercised in turning the plunger in the right direction each time while being sure it does not become tilted due to the eccentric forces brought to bear thereon.

Finally, it will be seen that the downwardly and upwardly-inclined surfaces 90 that intersect one another to produce notches 72, likewise, define cam surfaces operative to coast with the cam surfaces 86 of the head to raise the plunger when rotating the latter from latched into unlatched or released position. The sides 92 of the head adjacent the top 94 thereof and shown inclined slightly upwardly and toward one another to produce a good finger-hold although they may have other shapes.

What is claimed is:

1. The lid latch for containers and the like which comprises: a key-forming plunger having a generally cylindrical shank carrying at least one laterally projecting portion at one end thereof defining on eccentric head; a pair of ears depending from the container body and lid therefor located in face-to-face relation when said lid is closed, said ears having apertures therein portions of which are in register with one another, one of said apertures defining a guideway sized to receive the shank of the plunger and adapted to restrict same to relative axial and rotational movement therein, the other of said apertures including a corresponding laterally-offset non-registering portion cooperating with the registering portion to define a keyway adapted to receive the head of the exposed surface of the ear bordering same upon limited relative rotational movement of said plunger into a second position, and means located upon the exposed face of said keyway-apertured ear defining a notch adapted to releasably retain the plunger head when the latter occupies its second position; means comprising a spring abutment carried by the plunger shank in spaced relation to the exposed face of the guideway-aperture ear; and, spring means located between the spring abutment and exposed face of said guideway-apertured ear operative to normally bias the plunger into retracted position and in which: the face of the plunger head facing the shank thereof includes a pair of oppositely-inclined cam surfaces intersecting one another to define a ridge adapted to fit into the notch; and, the notch-defining means includes a pair of oppositely-inclined intersecting cam surfaces adjacent the notch on at least one side thereof posi-

tioned and adapted to cooperate with the oppositely-inclined cam surfaces of the plunger head to extend the plunger upon rotation thereof into second position in one direction and out of second position in the opposite direction.

**2.** The lid latch as set forth in claim **1** in which: the notch-defining means and plunger head include at least one pair of complementary inclined cam surfaces positions and adapted to cooperate with one another to extend said plunger upon rotational movement thereof.

**3.** The lid latch as set forth in claim **1** in which: the shank of the plunger carries a laterally-extending portion defining a stop adapted to engage the hidden face of the guideway-aperture ear and limit the retractable movement thereof.

**4.** The lid latch as set forth in claim **1** in which: the spring means comprises a loose-wound helical compression spring positioned on the shank of the plunger.

**5.** The lid latch as set forth in claim **1** in which: the plunger includes a pair of laterally-projecting portions projecting diametrically in opposite directions from the shank; and, in which the keyway includes a pair of diametrically-positioned laterally-offset non-registering portions sized to pass both head-forming projections of the plunger.

**6.** The lid latch as set forth in claim **1** in which: the notch-defining means includes two pair of oppositely-inclined intersecting cam surfaces, one pair being located on one side of the notch and the second pair on the other side thereof, said pairs cooperating with the oppositely inclined cam surfaces of the plunger head to extend the plunger upon rotational movement thereof between its first and second positions in either direction.

* * * * *