Sept. 2, 1924. 1,507,317

E. E. LABERGE

LAWN SWEEPER

Original Filed Sept. 26, 1922

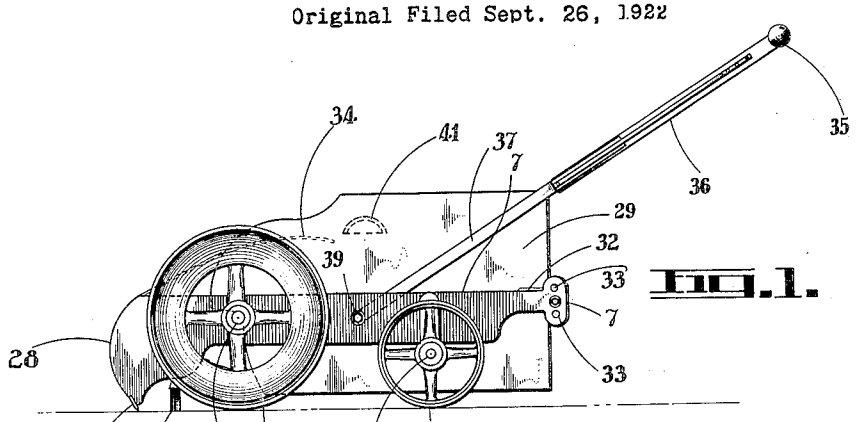

Fig. 1.

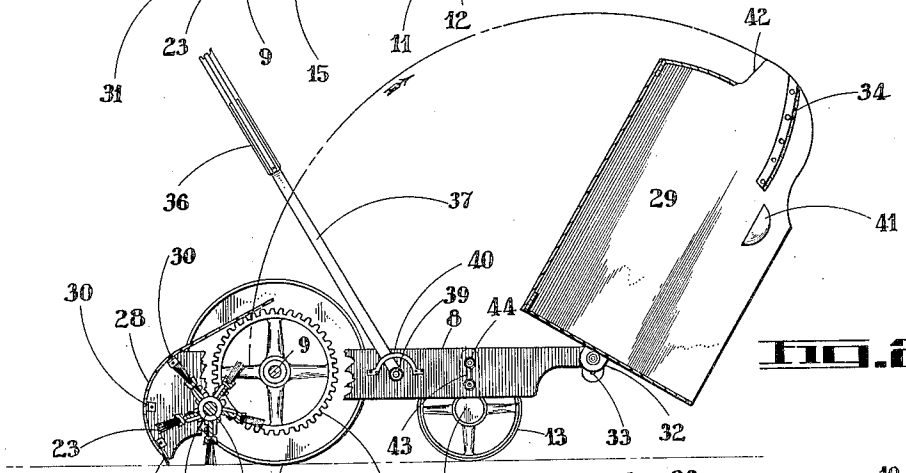

Fig. 2.

Fig. 4.

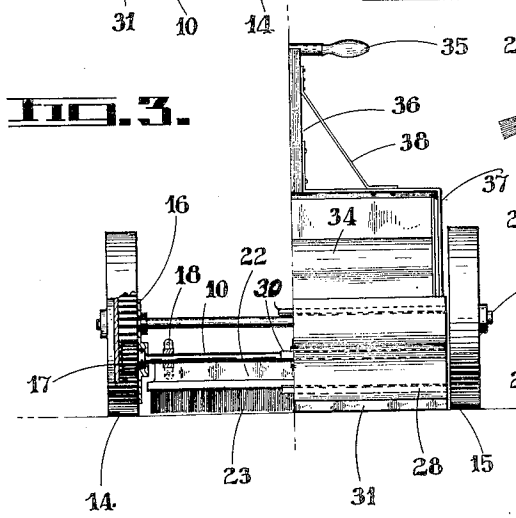

Fig. 3.

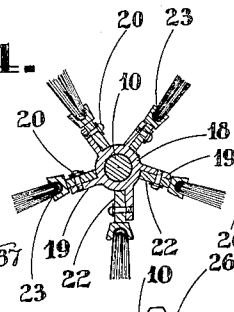

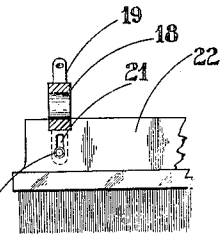

Fig. 5.

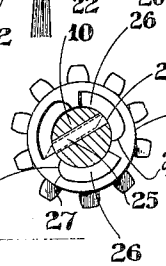

Fig. 6.

INVENTOR
Erneste E. Laberge.
By
Caron & Caron.
ATTORNEYS

Patented Sept. 2, 1924. 1,507,317

UNITED STATES PATENT OFFICE.

ERNESTE E. LABERGE, OF ROCKLIFFE, ONTARIO, CANADA.

LAWN SWEEPER.

Application filed September 26, 1922, Serial No. 590,717. Renewed February 1, 1924.

To all whom it may concern:

Be it known that I, ERNESTE E. LABERGE, a subject of the King of Great Britain, residing at Rockliffe, in the county of Russell and Province of Ontario, Canada, have invented certain new and useful Improvements in Lawn Sweepers, of which the following is a specification.

My invention relates to manually propelled lawn sweepers comprising novel and efficient means to sweep the grass, dust or foreign matter into a receptacle which may be readily dumped and cleansed.

One of the objects of my invention is to produce a sweeping machine having means to readily interchange or reverse the brushes so as to lengthen their duration.

A further object is to provide a sweeping machine capable of sweeping lawns and the like, which, although working on the principle of the common house sweeper, has improvements both in the construction and capacity to successively cope with this purpose.

Among other aims and objects of my invention may be cited the provision of a sweeping machine compact and durable in form, composed of few parts and of simple construction.

In the drawings:—

Figure 1 is a side elevation of a sweeping machine constructed in accordance with my present invention.

Figure 2 is a longitudinal sectional elevation.

Figure 3 is a front sectional elevation, portions of which are broken away to show the construction more clearly.

Figure 4 is an enlarged transverse sectional elevation showing the construction of the sweeping rotor.

Figure 5 is a fragmentary detail showing a portion of one of the rotor brushes.

Figure 6 is an enlarged vertical section through one of the driving wheels of the sweeping machine.

Referring to the drawings in detail, wherein similar numerals of reference designate corresponding parts, the numerals 7 and 8 designate the side members of the frame of the machine in which are journaled the transverse axles 9 and 10 and on which are substantially mounted the stub axles 11 upon which the supporting wheels 12 and 13 are rotatably mounted.

The numerals 14 and 15 designate the drive wheels of the machine, the same being substantially mounted on the outer extremity of the axle 9. The said drive wheels are cast, being provided with integral spur gears 16 which mesh with and drive the pinions 17 carried by the axle 10, upon which the sweeping rotor is mounted.

The sweeping rotor constitutes a sleeve 18 mounted on axle 10 provided with a plurality of integral tangential flanges 19. The said flanges are provided with tapped apertures for the reception of machine screws 20 which pass through elongated openings 21 configurated in the brush heads 22. It is obvious that the elongated apertures 21 provide means whereby the brushes 23 may be adjusted with relation to the surface of the ground, as required. A rotor so constructed not only sweeps but acts as a fan to elevate the sweepings.

I provide means whereby upon retrogression of the machine the sweeping rotor will cease to rotate in the following manner: The outer terminals of the axle 10 are provided with transverse grooves 24 for reception of keys 25, as shown in Figure 6. Arcuate openings, designated by numerals 26, are shown in the hubs 27 of the pinions 17. One end of said arcuate openings 26 is approximately radially flat while the adjoining end is angularly configurated, as denoted by the numerals 27. It is obvious that the flat end of one of the said arcuate openings 26 abuts against the said key, resultant that the shaft 10 rotates with the pinions 17. Upon retrogression of the machine the said pinions are rotated in a contrary direction with the result that the angularly configurated terminals of the arcuate openings 26 coincide with the angularly disposed edges of the keys 25, resultant that the key is shoved out of engagement. The angularly disposed extremity of the adjoining arcuate openings 26 will, however, cause the key to move backwardly to assume the former position. This reciprocating movement is maintained during retrogression of the machine.

The numeral 28 designates the hood over the brush for the purpose of directing the sweepings into the receptacle 29. The forward extremity of the machine is made stable by the transverse bars 30 substantial with the side members 7 and 8 of the frame.

A flexible lip, designated by the numeral 31, is secured to the lower edge of the covering 28 for the purpose of preventing the dust

and foreign matter from passing forwardly under the said covering 28, also providing means whereby adequate suction may be created by the rotor.

The container 29 is hingedly mounted, as at 32, to the extended extremity of the side members 7 and 8 of the frame. This provides means whereby this container may be elevated as shown in Figure 2 to facilitate dumping. Holes 33 are provided so as to lower or raise the hinge, thereby regulating the distance between the receptacle 29 and the ground.

The numeral 34 designates a baffle or guide plate which is transversely disposed in the said receptacle 29 for the purpose of directing the dust and foreign matter into the receptacle.

The machine is provided with a handle 35 mounted on the tongue 36 carried by the lateral arms 37 which are stabilized by the braces 38 and are hingedly connected, as at 39, to the side members 7 and 8 of the frame. The extent of the movement of the said tongue and handle is controlled by the arcuate guides 40 mounted on the inner sides of the side members 7 and 8 of the frame. Stub shafts 11 are slidingly mounted on frame members 7 and 8 by means of grooves 43 in the frame and bolts 44, thus providing means whereby the rear of the frame may be raised or lowered to adjust the distance between the member 31 and the ground to suit different surfaces.

The mode of operation is as follows: The operator, in advancing the machine, grasps the handle 35, exerting a propulsive momentum to cause the machine to advance, resultant that the drive wheels 14 and 15 are caused to rotate. Rotation of the drive wheels 14 and 15 will cause the pinions 17 to engage with the axle 10, resultant that the sweeping rotor is caused to rotate about its axis. Grass, dust and foreign matter encountered are swept into the receptacle 29. It is obvious that a considerable area may be swept without the necessity of dumping the receptacle 29. When this dumping operation is required the handle 41 is grasped and the receptacle 29 elevated to the position shown in Figure 2. When the receptacle assumes the position shown in Figure 1, the projections, designated by the numerals 42, bear on the axle 9 or equivalent supporting means.

While it is believed that from the foregoing description the nature and advantages of my invention will be readily comprehended, I desire to have it understood that the same is merely an illustration of the preferred embodiment of my invention to which I do not wish to limit myself, and that deviations from such detail in the practical adaptation of my device for commercial purposes may be resorted to as do not form a departure from the spirit of the invention as defined by the appended claim.

Claim:—

A sweeping machine of the character described constituting a wheel supporting frame, drive wheels carried by the said frame, a sweeping and elevating rotor, means rotating the said rotor by the rotation of the said drive wheels, a hingedly mounted container carried by the frame, means for directing the grass and foreign matter swept up by the said rotor into the said receptacle, a deflector mounted in the container, and a flexible lip carried by the said deflector, directing means adapted to prevent dust and foreign matter passing under the forward end of the said machine, and to enhance the suction of the rotor.

In testimony whereof I affix my signature.

E. E. LABERGE.