(12) INTERNATIONAL APPLICATION PUBLISHED UNDER THE PATENT COOPERATION TREATY (PCT)

(19) World Intellectual Property Organization
International Bureau

(43) International Publication Date
7 December 2000 (07.12.2000)

PCT

(10) International Publication Number
WO 00/74413 A1

(51) International Patent Classification[7]: H04Q 7/36, H04B 7/26

(21) International Application Number: PCT/IB00/00825

(22) International Filing Date: 1 June 2000 (01.06.2000)

(25) Filing Language: English

(26) Publication Language: English

(30) Priority Data:

60/137,106	1 June 1999 (01.06.1999)	US
60/137,252	2 June 1999 (02.06.1999)	US
09/476,404	20 January 2000 (20.01.2000)	US

(71) Applicant *(for all designated States except US)*: **NOKIA MOBILE PHONES LIMITED** [FI/FI]; Keilalahdentie 4, FIN-02150 Espoo (FI).

(72) Inventors; and

(75) Inventors/Applicants *(for US only)*: **SEBIRE, Benoist** [FR/FI]; Hakaniemenkatu 11 A 21, FIN-00160 Helsinki (FI). **VALLSTROM, Jari** [FI/FI]; Tuulikintie 6D 328, FIN-90570 Oulu (FI).

(74) Agents: **HAWS, Helen** et al.; Nokia IPR Department, Nokia House, Summit Avenue, Southwood, Farnborough, Hampshire GU14 0NG (GB).

(81) Designated States *(national)*: AE, AG, AL, AM, AT, AU, AZ, BA, BB, BG, BR, BY, CA, CH, CN, CR, CU, CZ, DE, DK, DM, DZ, EE, ES, FI, GB, GD, GE, GH, GM, HR, HU, ID, IL, IN, IS, JP, KE, KG, KP, KR, KZ, LC, LK, LR, LS, LT, LU, LV, MA, MD, MG, MK, MN, MW, MX, NO, NZ, PL, PT, RO, RU, SD, SE, SG, SI, SK, SL, TJ, TM, TR, TT, TZ, UA, UG, US, UZ, VN, YU, ZA, ZW.

(84) Designated States *(regional)*: ARIPO patent (GH, GM, KE, LS, MW, MZ, SD, SL, SZ, TZ, UG, ZW), Eurasian patent (AM, AZ, BY, KG, KZ, MD, RU, TJ, TM), European patent (AT, BE, CH, CY, DE, DK, ES, FI, FR, GB, GR, IE, IT, LU, MC, NL, PT, SE), OAPI patent (BF, BJ, CF, CG, CI, CM, GA, GN, GW, ML, MR, NE, SN, TD, TG).

[Continued on next page]

(54) Title: METHOD FOR CELL EXTENSION IN A TDMA CELLULAR TELEPHONE SYSTEM

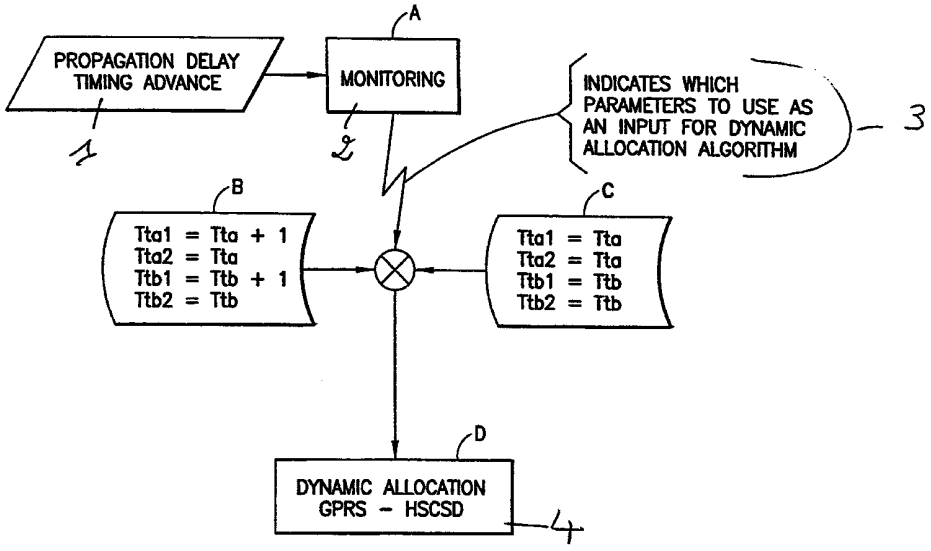

(57) Abstract: A method is disclosed for operating a wireless TDMA communications system. The method includes steps of monitoring a propagation delay of a mobile station; and when the propagation delay exceeds a predetermined limit, changing by a time slot unit a value of one or both of T_{ta1} and T_{tb1}, wherein T_{ta1} is a minimum number of time slots allowed between the end of a last, previous receive time slot and a first, next transmit time slot, when a channel measurement is to be performed inbetween, and wherein T_{tb1} is a minimum number of time slots allowed between the end of a last, previous receive time slot and a first, next transmit time slot.

WO 00/74413 A1

Published:
— *With international search report.*
— *Before the expiration of the time limit for amending the claims and to be republished in the event of receipt of amendments.*

For two-letter codes and other abbreviations, refer to the "Guidance Notes on Codes and Abbreviations" appearing at the beginning of each regular issue of the PCT Gazette.

METHOD FOR CELL EXTENSION IN A TDMA CELLULAR TELEPHONE SYSTEM

The present invention relates generally to radiotelephones and radiotelephone systems and, in particular, to time division multiple access (TDMA) cellular radiotelephones or mobile stations, as well as to radio communications systems and networks.

In at least one type of TDMA radio communications system the start of a reverse TDMA frame on the uplink, i.e., from the mobile station (MS) to a base station (BS), is delayed by a fixed period of three timeslots from the start of a forward TDMA frame on the downlink, i.e., from the base station to the mobile station. After adding a propagation delay, which is compensated for by a timing advance (TA) parameter, one obtains the situation depicted in Fig. 1.

As may be appreciated, an increase of the TA induces a decrease of T_{rt} (the time from the end of reception to the start of transmission.) However, this decrease of T_{rt} can result in the occurrence of one or more problems. For example, when the mobile station is far enough from its serving base transceiver station, or BTS, TA can become larger than some maximum value expected by the wireless network. By example, in a Global System for Mobile Communications (GSM) network this maximum value corresponds to a cell radius of about 35km, and therefore T_{rt} can become less than an expected minimum value. This is significant, as the minimum value of T_{rt} is used to fix a multislot capability of the mobile station and network. Indeed, as is known from the document: "GSM 05.02: Digital cellular telecommunications system (Phase 2+); Multiplexing and multiple access on the radio path" published by

ETSI there is described a multi-slot capability where supported by a mobile station (MS). The particular time slots assigned to a MS will depend on the type of MS, the service provided and whether or not adjacent cell power measurements are required. It is necessary for the network to decide on the above issues before the full restrictions on TS assignments can be resolved.

Two parameters depend on T_{rt}, as specified in the document entitled "GSM 05.02: Digital cellular telecommunication system (Phase 2+); Multiplexing and multiple access on the radio path" published by the European Telecommunications Standards Institute (ETSI). The two parameters are as follows:

T_{ta}: For a type 1 mobile station (i.e., one that is not required to transmit and receive at the same time) this parameter specifies a minimum number of timeslots that will be allowed between the end of the previous transmit or receive time slot and the next transmit time slot, when a channel measurement is to be performed by the mobile station in between.

T_{tb}: For the type 1 mobile station this parameter specifies the minimum number of timeslots that will be allowed between the end of the last receive time slot and the first, next transmitted time slot, or between the previous transmit time slot and the next transmit time slot when the frequency is changed in between.

These two parameters are specified in numbers of timeslots. Thus, if TA is large enough the effective value (from the mobile station point of view) can be reduced by one time slot. However, it cannot be reduced by a value of two timeslots since TA is limited in such a way that this is not possible. In other words, the cells are not large enough.

By example, when a type 1 mobile station travels further than the maximum cell radius that is specified in GSM (35km), its T_{rt} is decreased to the point that the mobile station may not be able to transmit on some portion of its allocated uplink burst after receiving its downlink burst. This can be referred to as an overlapping case, and an example thereof, with the following allocations, is shown in Fig. 2. Assume for the case of Fig. 2 that the network is High Speed Circuit Switched Data (HSCSD) and asymmetric, that downlink time slots 2 and 3 are used, and that time slot 2 is used on the uplink. When the mobile station is sufficiently far from its serving BTS, the increase in the TA results in an overlap of the uplink and downlink bursts. Therefore, one burst would be lost by type 1 mobile stations.

On the other hand, an increase in TA induces an increase in T_{tr}. Thus, no problem should arise with the associated parameters (T_{ra},T_{rb}). Reference in this regard can be had to the above-noted document: "GSM 05.02: Digital cellular telecommunications system (Phase 2+); Multiplexing and multiple access on the radio path" published by ETSI. The effective value of the parameters, from the mobile station point of view, cannot become lower than the minimum value expected.

It is known in the prior art to deal with large radius cells by forbidding traffic in consecutive time slots. However, this technique can reduce the capacity of the network by one half for the affected mobile stations, and does not support multislot operation, such as that specified for HSCSD or General Packet Radio System (GPRS).

It is thus a first aim of this invention to provide a method to enlarge the cell radius in a TDMA system, while avoiding problems resulting from the longer propagation delays.

It is another aim of this invention to provide a dynamic method of modifying at least one timing parameter to accommodate a mobile station in a large radius cell of a TDMA network.

A method is disclosed to effectively enlarge the cell radius in a TDMA based system in such a way that the timing advance (TA) parameter is modified by increasing the parameter range. The timing advance may be greater than one time slot and less than two time slots. Uplink and downlink overlapping is prevented by decreasing the time limit requirement from the end of reception to the start of transmission. A T_{rt} value is allowed to decrease in the same respect as the TA parameter is allowed to be increased, when compared to the conventional GSM system, and a maximum additional decrease of the T_{rt} value is one time slot. The propagation delay increase of cells having a larger radius is monitored in the base station, and the value of TA can be considered as well when mapping channels in the base station.

In an exemplary embodiment, and considering a GSM450 case, the radius of a cell can be larger than the conventional GSM radius (35 km). In order to cope with this increase in cell radius, the timing advance parameter is modified such that its effective range is increased. However, because of the greater range of the timing advance parameter, the operation of the TDMA mobile station may be adversely affected in such a way that bursts in the uplink

(reverse link) and in the downlink (forward link) would overlap in time An aspect of this invention is thus in providing a technique to make a multislot capability of the mobile station dynamic, thereby mitigating or eliminating this problem

A method is disclosed for operating a wireless TDMA communications system. The method includes steps of monitoring a propagation delay of a mobile station; and when the propagation delay exceeds a predetermined limit, changing by a time slot unit a value of one or both of T_{ta1} and T_{tb1}, wherein T_{ta1} is a minimum number of time slots allowed between the end of a last, previous receive time slot and a first, next transmit time slot, when a channel measurement is to be performed in between, and wherein T_{tb1} is a minimum number of time slots allowed between the end of a last, previous receive time slot and a first, next transmit time slot.

According to a further aspect of the invention, there is provided a method for operating a wireless TDMA communications system, comprising steps of:

monitoring a propagation delay of a mobile station; and

when the propagation delay exceeds a predetermined limit, varying, by a predetermined amount, a minimum number of time slots allowed between the end of a last, previous receive time slot and a first, next transmit time slot of the mobile station.

Whilst according to a still further aspect of the invention, there is provided a wireless TDMA communications system, comprising: a base station; and at least one mobile station; wherein the base station includes propagation delay monitoring means, an output from which is compared in processing means

with a predetermined value and in response to the comparison an instruction is transmitted to the mobile station to vary by a predetermined amount, a minimum number of time slots allowed between the end of a last, previous receive time slot and a first, next transmit time slot of the mobile station.

According to a yet further aspect of the invention, there is provided a method of operating a wireless TDMA communications system including a mobile station operable in multiple time slots within a frame, the method comprising monitoring a propagation delay of the mobile station such that when the propagation delay exceeds a predetermined limit, the number of time slots allowed between the end of a last, previous receive time slot and a first, next transmit time slot of the mobile station is increased.

As a consequence of any increase in the number of time slots allowed between the end of a last, previous receive time slot and a first, next transmit time slot there will be a corresponding reduction in the number of transmission and reception time slots available for allocation to the mobile station within the frame. Thus, although the allocation of slots to the mobile station is desirably maintained at a level sufficient to match the requirements of the current multislot service, for example High Speed Circuit Switched Data (HSCSD) or General Packet Radio Service (GPRS), it may be that slots available to the service within the frame will be below the desired value, in which case the allocation of system resources will have to be reconsidered by the network.

According to another aspect of the invention, there is provided a method of operating a wireless TDMA communications system including a mobile station operable in multiple time slots within a frame, the method comprising monitoring a propagation delay of the mobile station and when the propagation

delay exceeds a predetermined limit, changing by a time slot unit a value of one or both of T_{ta} and T_{tb} wherein T_{ta} is a minimum number of time slots allowed between the end of a last, previous receive time slot and a first, next transmit time slot, when a measurement is to be performed in between and wherein T_{tb} is a minimum number of time slots allowed between the end of a last, previous receive time slot and a first, next transmit time slot.

The above set forth and other features of the invention are made more apparent in the ensuing Detailed Description of the Invention when read in conjunction with the attached Drawings, wherein:

Fig. 1 is a diagram illustrating conventional downlink and uplink TDMA time slots, and further depicts the timing advance (TA) and related parameters;

Fig. 2 illustrates the effect of the known overlapping problem;

Fig. 3 is a block diagram of an embodiment of a mobile station that is suitable for use in the TDMA system in accordance with the teachings of this invention;

Fig. 4 is an elevational view of the mobile station shown in Fig. 3, and which further illustrates a wireless communication system to which the mobile station is bidirectionally coupled through RF links; and

Fig. 5 is an illustration of a dynamic multislot class algorithm in accordance with the teachings of this invention.

Reference is first made to Figs. 3 and 4 for illustrating a wireless user terminal or mobile station 10, such as but not limited to a cellular radiotelephone or a

personal communicator, that is suitable for practicing this invention. The mobile station 10 includes an antenna 12 for transmitting signals to and for receiving signals from a base site or base station 30, which is assumed to include a base station sub-system (BSS) 30A as well as a base transceiver station (BTS) 30B. For simplicity, these two components are collectively referred to simply as the base station 30. The BSS 30A may be coupled to a plurality of the BTS 30B. The base station 30 is a part of a wireless network 32 that includes a mobile switching center (MSC) 34 or similar apparatus. The MSC 34 provides a connection to landline trunks.

The mobile station includes a modulator (MOD) 14A, a transmitter 14, a receiver 16, a demodulator (DEMOD) 16A, and a controller 18 that provides signals to and receives signals from the transmitter 14 and receiver 16, respectively. These signals include signaling information in accordance with the air interface standard of the applicable cellular system, and also user speech and/or user generated data. The air interface standard is assumed for this invention to be based on TDMA, such as is known from, or that is similar to GSM. The teachings of this invention are not, however, intended to be limited only to a GSM-type of TDMA system. With general regard to GSM mobile stations and networks, reference can be had to "The GSM System for Mobile Communications", by Michel Mouly and Marie-Bernadette Pautet, 1992, the disclosure of which is incorporated by reference in its entirety.

It is understood that the controller 18 also includes the circuitry required for implementing the audio and logic functions of the mobile station. By example, the controller 18 may be comprised of a digital signal processor device, a microprocessor device, and various analog to digital converters, digital to analog converters, and other support circuits. The control and signal

processing functions of the mobile station are allocated between these devices according to their respective capabilities.

A user interface may include a conventional earphone or speaker 17, a conventional microphone 19, a display 20, and a user input device, typically a keypad 22, all of which are coupled to the controller 18. The keypad 22 includes the conventional numeric (0-9) and related keys (#,*) 22a, and other keys 22b used for operating the mobile station 10. The mobile station 10 also includes a battery 26 for powering the various circuits that are required to operate the mobile station. The mobile station 10 also includes various memories, shown collectively as the memory 24, wherein are stored a plurality of constants and variables that are used by the controller 18 during the operation of the mobile station. Certain TDMA timing related parameters that are transmitted from the base station 30 to the mobile station 10, which are of most interest to this invention, are typically stored in the memory 24 for use by the controller 18. It should be understood that the mobile station 10 can be a vehicle mounted or a handheld device. It should further be appreciated that the mobile station 10 can be capable of operating with one or more air interface standards, modulation types, and access types, and may thus be a dual (or higher) mode device.

In accordance with the teachings of this invention, a technique is provided to adjust at least in part the meaning of T_{ta} and T_{tb}, depending on the TA value associated with the mobile station 10. The adjustment of those two parameters results in the base station 30, in particular the BSS 30A, changing the mapping on the TDMA frames for the associated mobile station 10.

It should be noted that a dynamic mapping mechanism on a classmark change does already exist, and is referred to as a "class mark change procedure" in a publication: "GSM 04.08: Digital cellular telecommunication system (Phase 2+); Mobile radio interface layer 3 specification". However, in the instant case the change is not initiated by the mobile station 10, but by the base station 30, in particular by a data processor of the BSS 30A portion, which monitors the value of TA in order to detect possible problems.

In accordance with the teachings of this invention, when the value of TA is beginning to exceed one limit, the following parts of the definitions of T_{ta} and T_{tb} are changed within the BSS 30A.

For the case of T_{ta}, the BSS 30A considers only a part of its meaning, i.e., the minimum number of time slots that will be allowed between the end of the previous receive time slot and the next transmit time slot, when a channel measurement is to be performed between.

For the case of T_{tb}, the BSS 30A considers only a part of its meaning, i.e., the minimum number of time slots that will be allowed between the end of the last previous receive time slot and the first, next transmit time slot.

It can be appreciated that these considered elements of T_{ta} and T_{tb} are those elements that are most directly affected by the problem described before (i.e., the decrease of T_{rt} when TA increases). In general, a variation in the TA parameter does not affect those elements of T_{ta} and T_{tb} dealing with consecutive transmissions by the mobile station 10.

By way of a summary of the teachings of this invention, T_{ta1} is a minimum number of time slots that are to be allowed between the end of the previous receive time slot and the next transmit time slot, when a channel measurement is to be performed in between. T_{ta2} is a minimum number of time slots that are to be allowed between the end of the previous transmit time slot and the next transmit time slot, when a channel measurement is to be performed in between. T_{tb1} is a minimum number of time slots that are to be allowed between the end of the last previous receive time slot and the first, next transmit time slot. T_{tb2} is a minimum number of time slots that are to be allowed between the end of the last, previous transmit time slot and the first, next transmit time slot.

TA is preferably calculated by the BSS 30A by a continuous monitoring of propagation delays. Reference in this regard can be had to a publication entitled: "GSM 05.10: Digital cellular telecommunication (Phase 2+); Radio Subsystem Synchronization". As such, the teachings of this invention add an algorithm which monitors propagation delays as well.

Fig. 5 depicts an exemplary implementation of a Dynamic Multislot Class Algorithm executed by the BSS 30A in accordance with this invention. While monitoring the mobile station 10 (Step A), the propagation delay from the mobile station 10 are found to exceed a predetermined limit (for example, 120μs ↔ TA of 240μs ↔ cell radius of 35km), T_{ta1} and T_{tb1} are increased by one time slot unit in order to compensate for the increased TA at the current location of the mobile station 10 (Step B), and the BSS 30A thereafter causes at least the revised values of T_{ta1} and T_{tb1} to be transmitted to the mobile station 10 for storage in the mobile station memory 24. Otherwise T_{ta1} and T_{tb1} remain equal to T_{ta} and T_{tb}, respectively (Step C). As a consequence the BSS

30A may also reexamine the mapping of the channels (Step D) in order to fulfill the new requirements, thus providing a dynamic allocation of system resources. For the case of HSCSD and GPRS, the new requirements may result in a reconsideration of resource allocation, e.g., free time slots which might overlap, and/or free time slots which cannot be received or transmitted because of the revised, more stringent timing schedule.

Below the predetermined limit, the meaning of the foregoing parameters remains the same as it is in a conventional GSM network (Step C). Thus, the different interpretation of T_{ta} and T_{tb} is preferably activated only when the mobile station 10 is located at some threshold distance from its serving BTS 30B, i.e., when its TA exceeds some predetermined limit. In general, the change of T_{ta} and T_{tb} functions as a trigger to initiate a new allocation.

Although described in the context of preferred embodiments, it should be realized that a number of modifications to these teachings may occur to one skilled in the art. Furthermore, and as was indicated above, the teachings of this invention may be applied to other types of TDMA networks and systems than GSM networks and systems.

Thus, while the invention has been particularly shown and described with respect to preferred embodiments thereof, it will be understood by those skilled in the art that changes in form and details may be made therein without departing from the scope and spirit of the invention.

CLAIMS

1. A method for operating a wireless TDMA communications system, comprising steps of:

monitoring a propagation delay of a mobile station; and

when the propagation delay exceeds a predetermined limit, varying, by a predetermined amount, a minimum number of time slots allowed between the end of a last, previous receive time slot and a first, next transmit time slot, when a channel measurement is to be performed in between, and varying a minimum number of time slots allowed between the end of a last, previous receive time slot and a first, next transmit time slot.

2. A method as in claim 1, wherein the predetermined amount is one time slot.

3. A method as in claim 1, and further comprising a step, in response to the steps of varying, of revising system resource allocations accordingly.

4. A method for operating a wireless TDMA communications system, comprising steps of:

monitoring at a base station controller a propagation delay of a mobile station; and

when the propagation delay exceeds a predetermined limit, changing by a time slot unit a value of one or both of T_{ta1} and T_{tb1}, wherein T_{ta1} is a minimum number of time slots allowed between the end of a last,

previous receive time slot and a first, next transmit time slot, when a measurement is to be performed in between, and wherein T_{tb1} is a minimum number of time slots allowed between the end of a last, previous receive time slot and a first, next transmit time slot.

5. A wireless TDMA communications system, comprising:

a base transceiver station (BTS);

a base station subsystem (BSS) coupled to said BTS: and

at least one mobile station comprising a transceiver for operating within a coverage area of said BTS;

said BSS comprising a data processor for executing a dynamic multislot class algorithm by monitoring a propagation delay of the mobile station and, in response to the propagation delay exceeding a predetermined limit, for varying by a predetermined amount a minimum number of time slots allowed between the end of a last, previous receive time slot and a first, next transmit time slot, when a measurement is to be performed in between, and a minimum number of time slots allowed between the end of a last, previous receive time slot and a first, next transmit time slot.

6. A system as in claim 5, wherein the predetermined amount is one time slot.

7. A system as in claim 5, wherein said BSS data processor, in response to the propagation delay exceeding the predetermined limit, revises system resource allocations in accordance with the variation in the minimum number of time slots.

8. A method executed by a TDMA base station sub-system (BSS) for deriving timing parameters for a mobile station, comprising steps of:

monitoring a propagation delay of the mobile station;

in response to the propagation delay exceeding a predetermined limit, increasing by one time slot a value of T_{ta1} and T_{tb1}, where T_{ta1} is a minimum number of time slots allowed between the end of a last, previous receive time slot and a first, next transmit time slot, when a channel measurement is to be performed in between, and where T_{tb1} is a minimum number of time slots allowed between the end of a last, previous receive time slot and a first, next transmit time slot, while maintaining a value of T_{ta2}, which is a minimum number of time slots that are allowed between the end of a previous transmit time slot and a next transmit time slot, when a channel measurement is to be performed in between, and a value of T_{tb2}, which is a minimum number of time slots that are allowed between the end of the last, previous transmit time slot and the first, next transmit time slot; and

transmitting at least the values of T_{ta1} and T_{tb1} to the mobile station for storage in the mobile station.

9. A method for operating a wireless TDMA communications system, comprising steps of:

monitoring a propagation delay of a mobile station; and

when the propagation delay exceeds a predetermined limit, varying, by a predetermined amount, a minimum number of time slots allowed

between the end of a last, previous receive time slot and a first, next transmit time slot of the mobile station.

10. A method as claimed in Claim 9, wherein a channel measurement is performed between the end of the last, previous receive time slot and the first, next transmit time slot.

11. A method as claimed in Claim 9 or Claim 10, including allocating system resources in accordance with the variation in the minimum number of time slots.

12. A wireless TDMA communications system, comprising:

a base station;

and

at least one mobile station;

wherein the base station includes propagation delay monitoring means, an output from which is compared in processing means with a predetermined value and in response to the comparison an instruction is transmitted to the mobile station to vary by a predetermined amount, a minimum number of time slots allowed between the end of a last, previous receive time slot and a first, next transmit time slot of the mobile station.

13. A system as in claim 12, wherein said base station includes resource allocation means which, in response to the comparison revises system resource allocations.

14. A method of operating a wireless TDMA communications system including a mobile station operable in multiple time slots within a frame, the method comprising:

monitoring a propagation delay of the mobile station such that when the propagation delay exceeds a predetermined limit, the number of time slots allowed between the end of a last, previous receive time slot and a first, next transmit time slot of the mobile station is increased.

15. A method as claimed in Claim 14, wherein a channel measurement is performed between the end of the last, previous receive time slot and the first, next transmit time slot.

16. A method of operating a wireless TDMA communications system including a mobile station operable in multiple time slots within a frame, the method comprising:

monitoring a propagation delay of the mobile station and when the propagation delay exceeds a predetermined limit, changing by a time slot unit a value of T_{ta}, wherein T_{ta} is a minimum number of time slots allowed between the end of a last, previous receive time slot and a first, next transmit time slot, when a measurement is to be performed in between.

17. A method of operating a wireless TDMA communications system including a mobile station operable in multiple time slots within a frame, the method comprising:

monitoring a propagation delay of the mobile station and when the propagation delay exceeds a predetermined limit, changing by a time slot unit a value of T_{tb}, wherein T_{tb} is a minimum number of time slots

allowed between the end of a last, previous receive time slot and a first, next transmit time slot.

18. A method as claimed in Claim 16 or 17, wherein the mobile station is not required to transmit and receive at the same time.

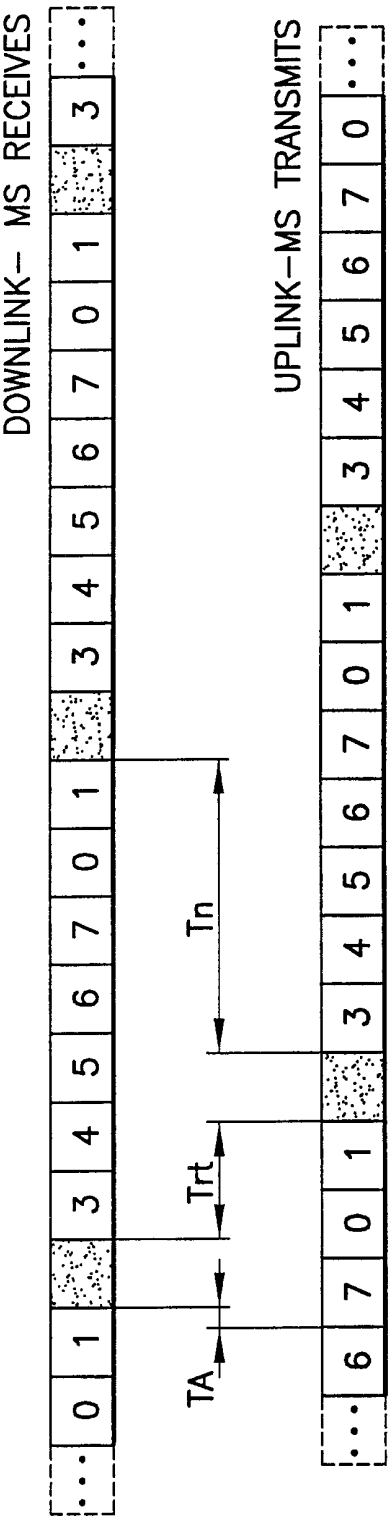

TA : TIMING ADVANCE

Trt : TIME FROM END OF RECEPTION TO START OF TRANSMISSION = 2BP – TA

Ttr : TIME FROM END OF TRANSMISSION TO START OF RECEPTION = 4BP + TA

FIG.1
PRIOR ART

FIG.2
PRIOR ART

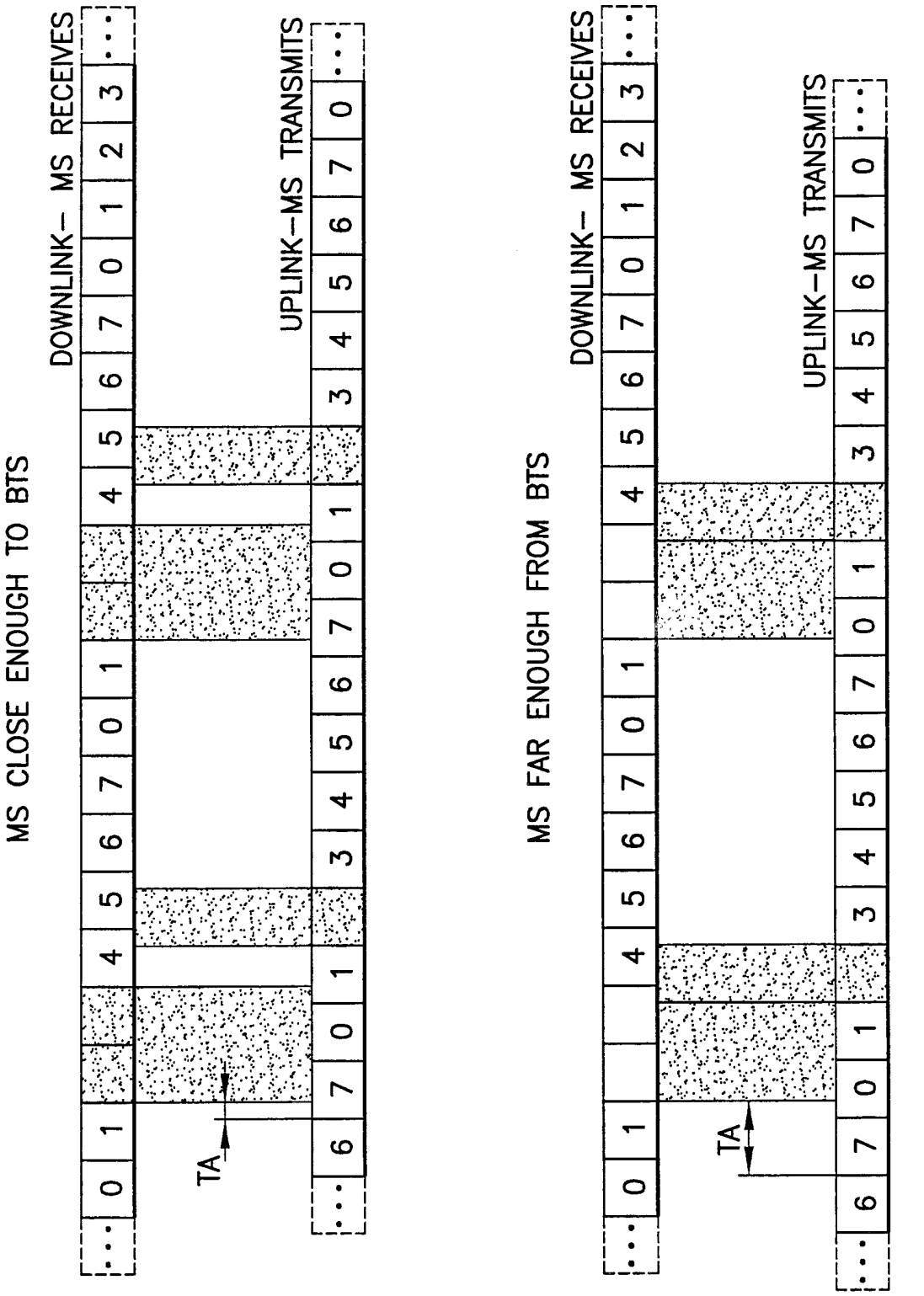

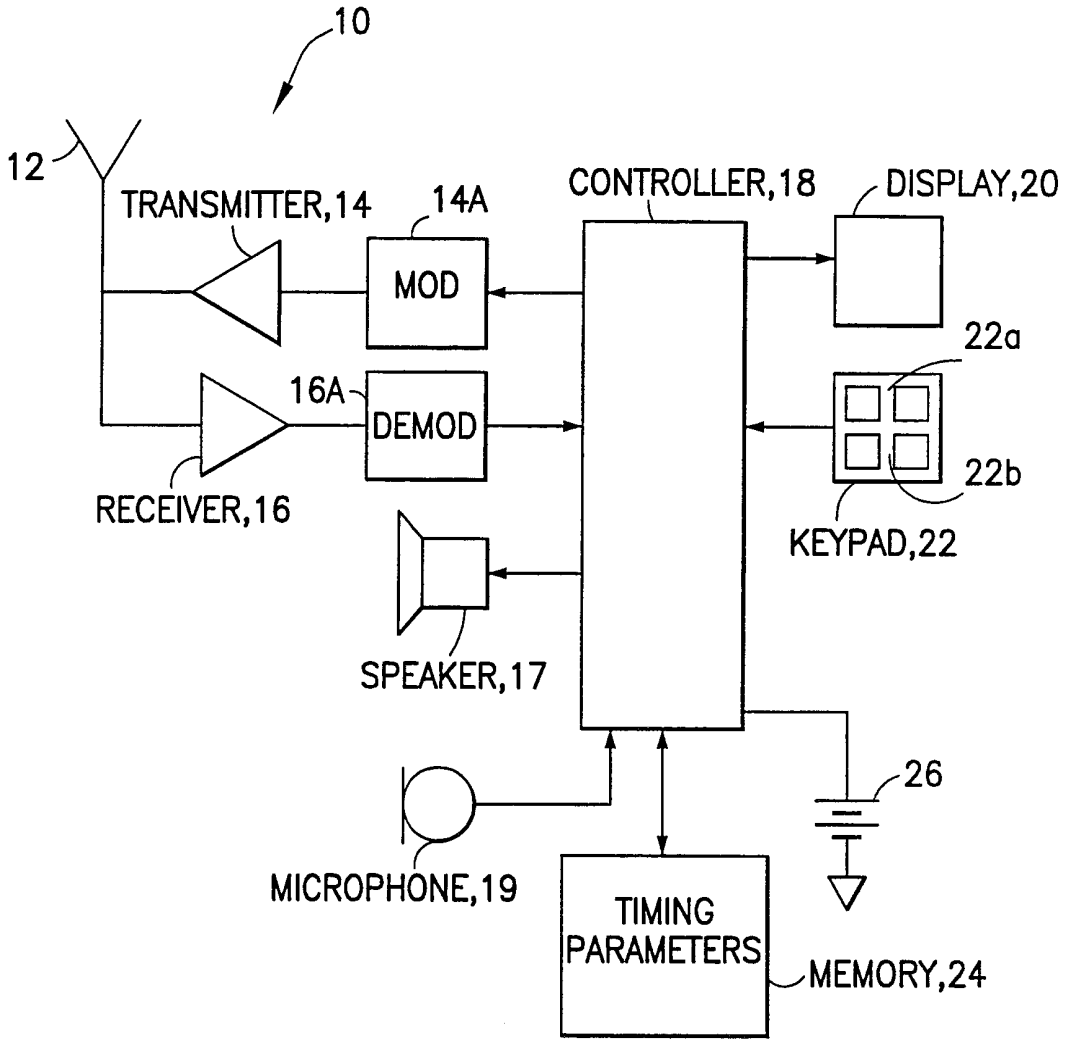
10
12
TRANSMITTER,14
14A
MOD
CONTROLLER,18
DISPLAY,20
22a
16A
DEMOD
22b
RECEIVER,16
KEYPAD,22
SPEAKER,17
26
MICROPHONE,19
TIMING
PARAMETERS
MEMORY,24

FIG.3

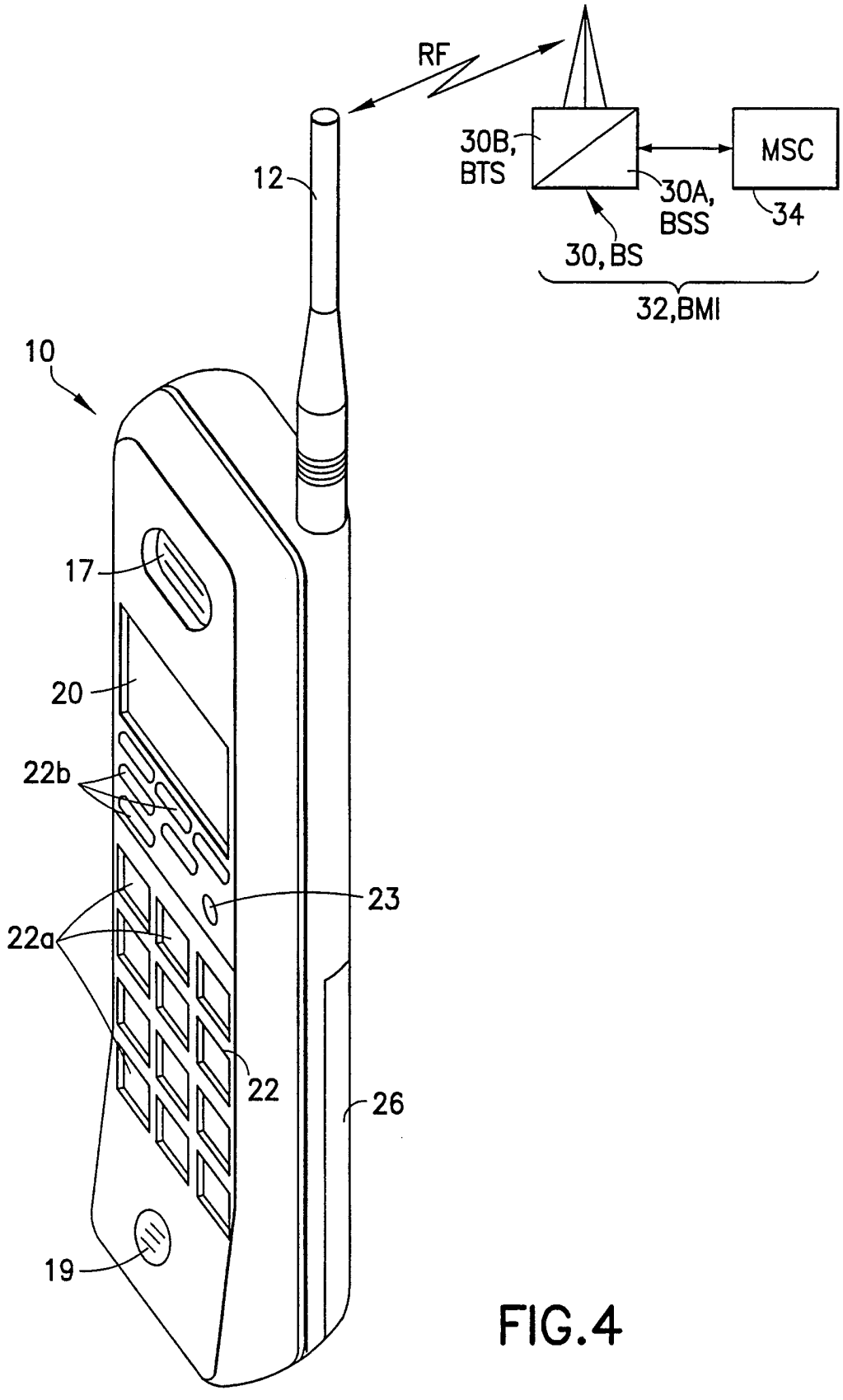
RF
30B,
BTS
MSC
12
30A,
BSS
34
30, BS
32,BMI
10
17
20
22b
23
22a
22
26
19

FIG.4

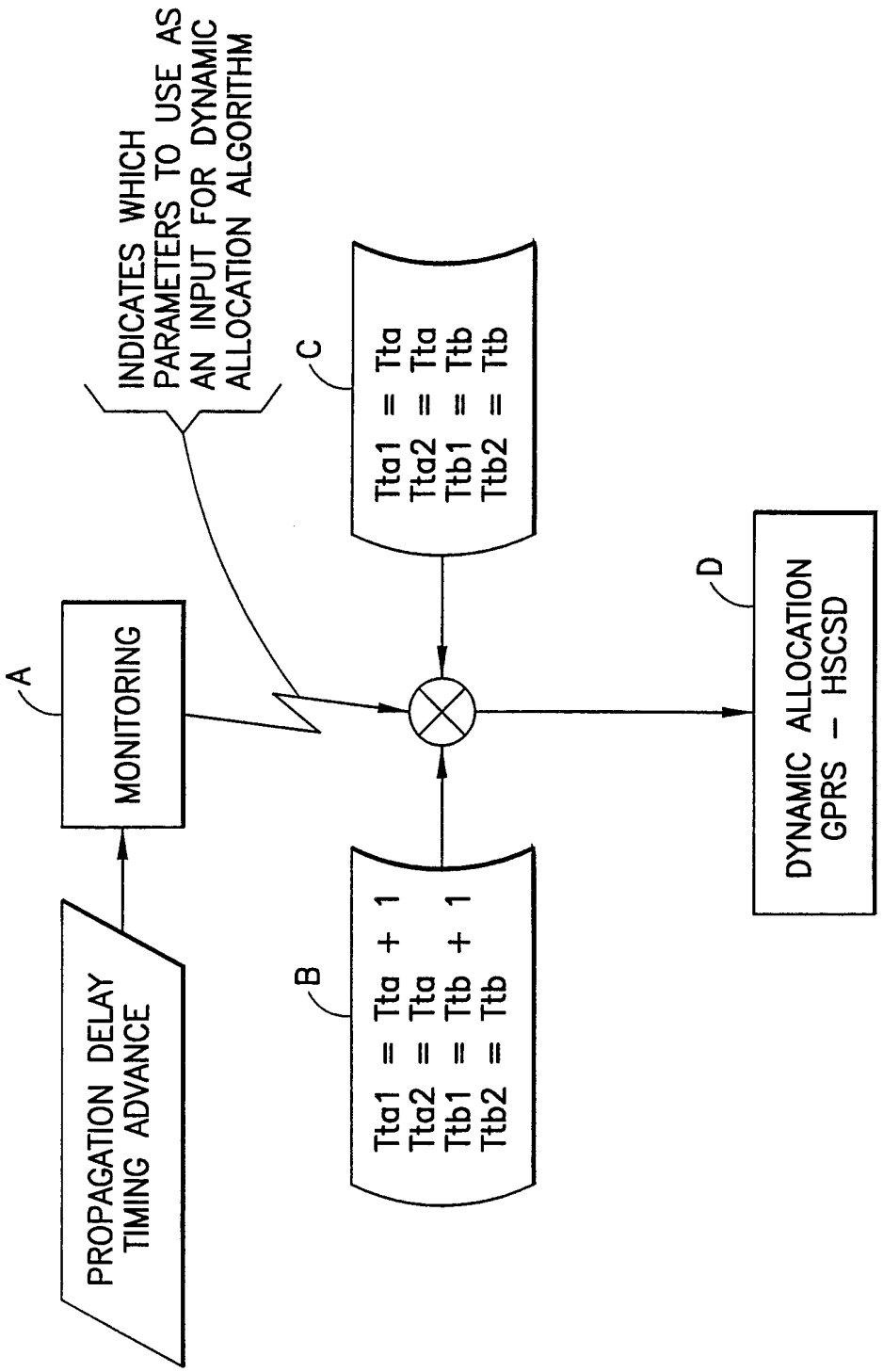
INDICATES WHICH PARAMETERS TO USE AS AN INPUT FOR DYNAMIC ALLOCATION ALGORITHM
A
MONITORING
PROPAGATION DELAY TIMING ADVANCE
B
Tta1 = Tta + 1
Tta2 = Tta
Ttb1 = Ttb + 1
Ttb2 = Ttb
C
Tta1 = Tta
Tta2 = Tta
Ttb1 = Ttb
Ttb2 = Ttb
D
DYNAMIC ALLOCATION
GPRS – HSCSD

FIG.5

INTERNATIONAL SEARCH REPORT

International Application No
PCT/IB 00/00825

A. CLASSIFICATION OF SUBJECT MATTER
IPC 7 H04Q7/36 H04B7/26

According to International Patent Classification (IPC) or to both national classification and IPC

B. FIELDS SEARCHED

Minimum documentation searched (classification system followed by classification symbols)
IPC 7 H04Q H04B

Documentation searched other than minimum documentation to the extent that such documents are included in the fields searched

Electronic data base consulted during the international search (name of data base and, where practical, search terms used)
EPO-Internal, WPI Data, INSPEC

C. DOCUMENTS CONSIDERED TO BE RELEVANT

Category °	Citation of document, with indication, where appropriate, of the relevant passages	Relevant to claim No.
X	WO 98 15147 A (ERICSSON GE MOBILE INC) 9 April 1998 (1998-04-09) the whole document	1-18
A	EP 0 295 227 A (ERICSSON TELEFON AB L M) 14 December 1988 (1988-12-14) column 1, line 41 -column 4, line 4 claims	1-18
A	US 5 483 537 A (DUPUY PIERRE) 9 January 1996 (1996-01-09) claims	1-18
A	WO 97 12451 A (ERICSSON TELEFON AB L M) 3 April 1997 (1997-04-03) page 6, line 21 -page 12, line 4	1-18

☐ Further documents are listed in the continuation of box C.

☒ Patent family members are listed in annex.

° Special categories of cited documents :

"A" document defining the general state of the art which is not considered to be of particular relevance

"E" earlier document but published on or after the international filing date

"L" document which may throw doubts on priority claim(s) or which is cited to establish the publication date of another citation or other special reason (as specified)

"O" document referring to an oral disclosure, use, exhibition or other means

"P" document published prior to the international filing date but later than the priority date claimed

"T" later document published after the international filing date or priority date and not in conflict with the application but cited to understand the principle or theory underlying the invention

"X" document of particular relevance; the claimed invention cannot be considered novel or cannot be considered to involve an inventive step when the document is taken alone

"Y" document of particular relevance; the claimed invention cannot be considered to involve an inventive step when the document is combined with one or more other such documents, such combination being obvious to a person skilled in the art.

"&" document member of the same patent family

Date of the actual completion of the international search	Date of mailing of the international search report
27 September 2000	04/10/2000

Name and mailing address of the ISA	Authorized officer
European Patent Office, P.B. 5818 Patentlaan 2 NL – 2280 HV Rijswijk Tel. (+31–70) 340–2040, Tx. 31 651 epo nl, Fax: (+31–70) 340–3016	Roberti, V

1

Form PCT/ISA/210 (second sheet) (July 1992)

INTERNATIONAL SEARCH REPORT

Information on patent family members

Int. tional Application No
PCT/IB 00/00825

Patent document cited in search report	Publication date	Patent family member(s)	Publication date
WO 9815147 A	09-04-1998	US 5812544 A	22-09-1998
		AU 4807797 A	24-04-1998
		BR 9712192 A	31-08-1999
		CN 1239633 A	22-12-1999
		EP 0929983 A	21-07-1999
EP 0295227 A	14-12-1988	SE 455750 B	01-08-1988
		DE 3868701 A	09-04-1992
		DK 317488 A	12-12-1988
		FI 882611 A,B,	12-12-1988
US 5483537 A	09-01-1996	FR 2702320 A	09-09-1994
		AT 195620 T	15-09-2000
		AU 679026 B	19-06-1997
		AU 5753294 A	08-09-1994
		CA 2116748 A	04-09-1994
		CN 1098835 A	15-02-1995
		DE 69425518 D	21-09-2000
		EP 0614290 A	07-09-1994
		FI 940950 A	04-09-1994
		NO 940700 A	05-09-1994
WO 9712451 A	03-04-1997	US 5642355 A	24-06-1997
		AU 7151096 A	17-04-1997
		EP 0852854 A	15-07-1998