E. O. SCHWEITZER & N. J. CONRAD.

HORN GAP LIGHTNING ARRESTER.

APPLICATION FILED OCT. 12, 1914.

1,151,726.

Patented Aug. 31, 1915.

3 SHEETS—SHEET 1.

Fig. 1

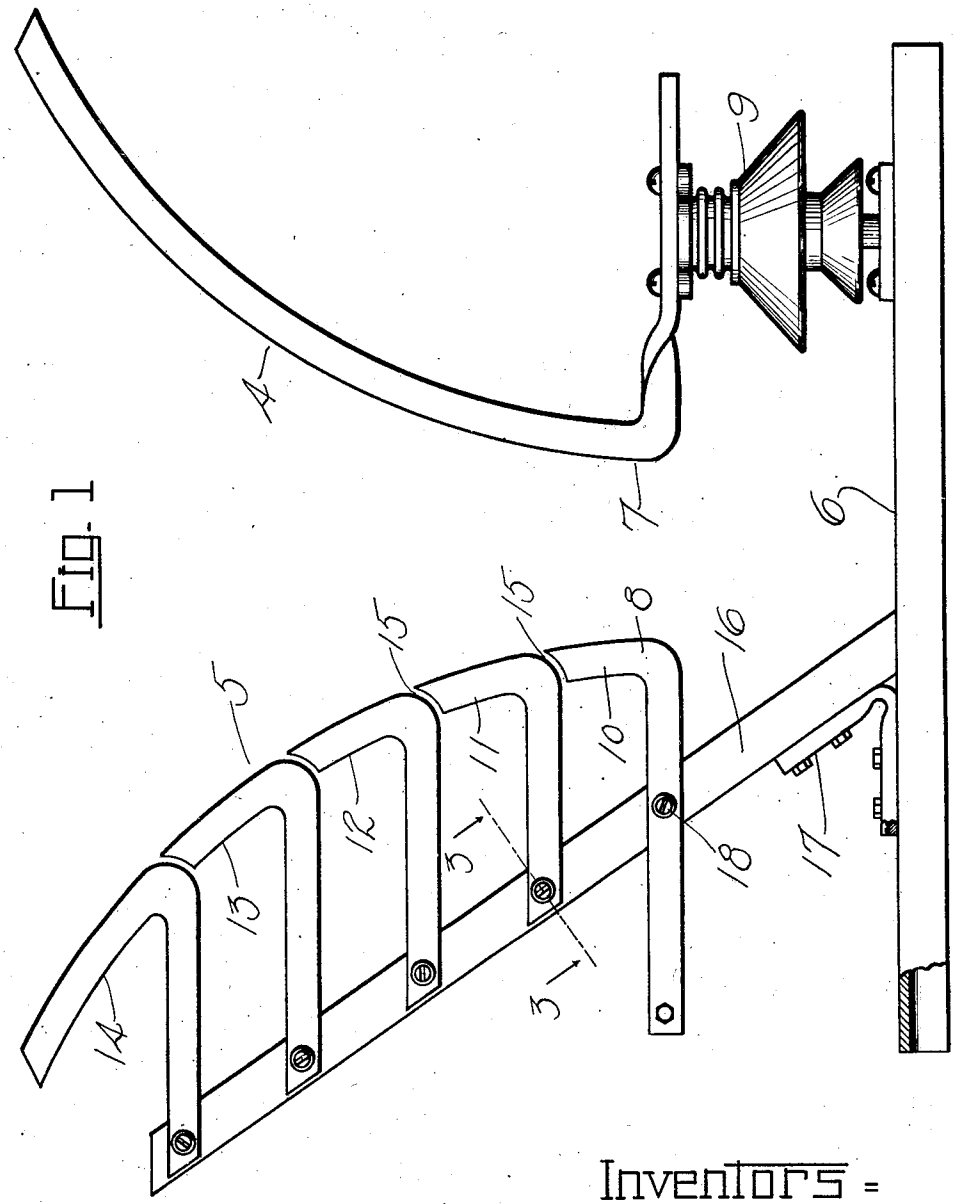

Witnesses =
Cameron A. Whitcomb
Ernest W. Papale.

Inventors =
Edmund O. Schweitzer
Nicholas J. Conrad
By Brown, Hanson & Boettcher
Attorneys

E. O. SCHWEITZER & N. J. CONRAD.

HORN GAP LIGHTNING ARRESTER.

APPLICATION FILED OCT. 12, 1914.

1,151,726. **Patented Aug. 31, 1915.**

3 SHEETS—SHEET 2.

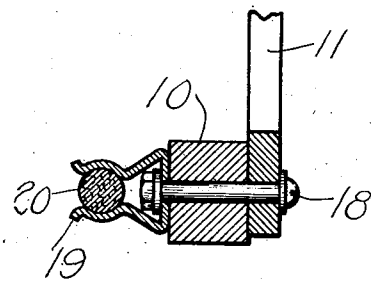

Fig. 3

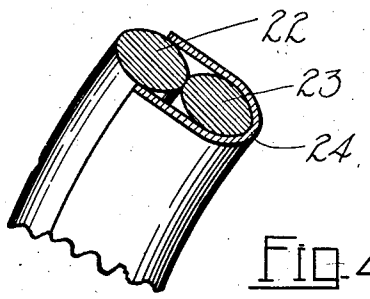

Fig. 4

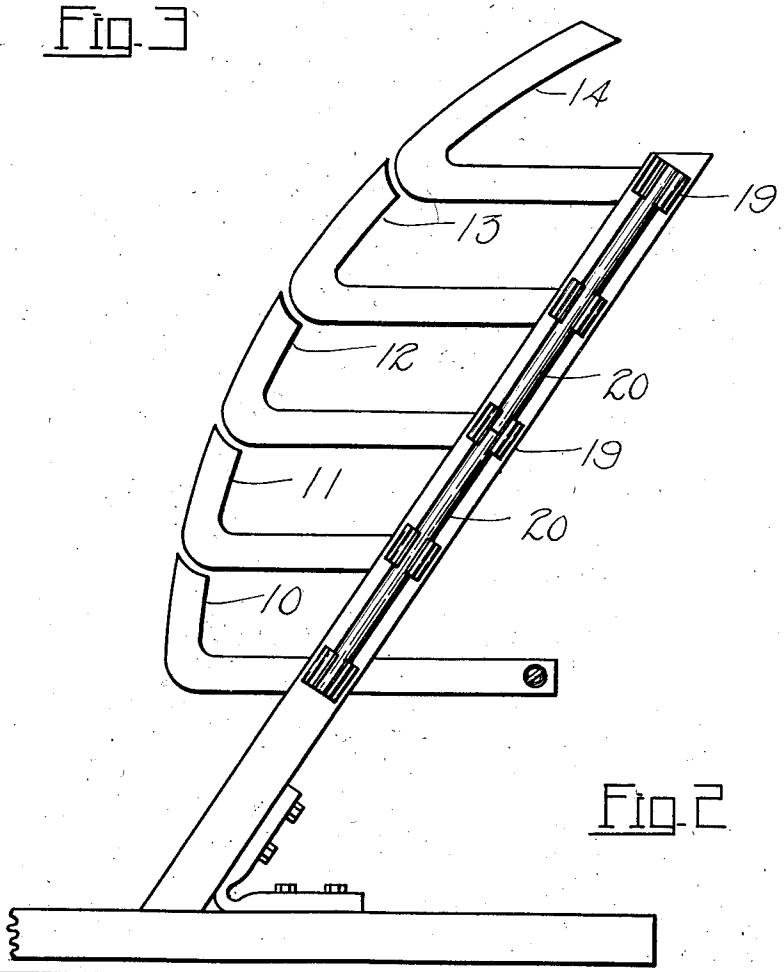

Fig. 2

Witnesses =

Cameron A. Whitsett

John A. Dinner

Inventors =

Edmund O. Schweitzer

Nicholas J. Conrad

By Brown, Hanson & Bettcher

Attorneys

E. O. SCHWEITZER & N. J. CONRAD.

HORN GAP LIGHTNING ARRESTER.

APPLICATION FILED OCT. 12, 1914.

1,151,726.

Patented Aug. 31, 1915.

3 SHEETS—SHEET 3.

Fig. 6

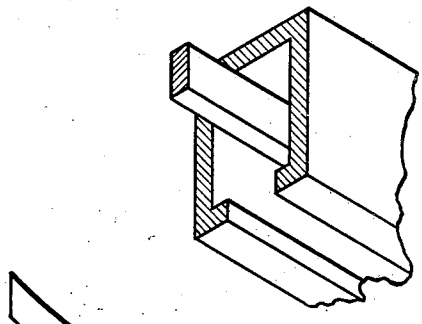

Fig. 5

Witnesses =

Cameron A. Whitsett

Ernest W. Popalen

Inventors =

Edmund O. Schweitzer

Nicholas J. Conrad

By Brown, Hanson & Poettcher

Attorneys

UNITED STATES PATENT OFFICE.

EDMUND O. SCHWEITZER AND NICHOLAS J. CONRAD, OF CHICAGO, ILLINOIS, ASSIGNORS TO SCHWEITZER & CONRAD (INCORPORATED), OF CHICAGO, ILLINOIS, A CORPORATION OF ILLINOIS.

HORN-GAP LIGHTNING-ARRESTER.

1,151,726. Specification of Letters Patent. Patented Aug. 31, 1915.

Application filed October 12, 1914. Serial No. 866,214.

To all whom it may concern:

Be it known that we, EDMUND O. SCHWEITZER and NICHOLAS J. CONRAD, both citizens of the United States, and residents of Chicago, in the county of Cook and State of Illinois, have invented certain new and useful Improvements in Horn-Gap Lightning-Arresters, of which the following is a full, clear, concise, and exact description, reference being had to the accompanying drawings, forming a part of this specification.

The subject matter of this invention is a horn gap lightning arrester.

In operating transmission systems great difficulty has been experienced in protecting the same from high potentials, such as may be caused by lightning discharges, line surges, short-circuit surges, etc. These momentary voltages must be relieved within a short distance from the point at which they originate, or a partial or complete destruction of parts of a transmission system are very likely to occur. As a consequence, it is necessary to install means for protection against lightning in exposed positions. This is very unfavorable to satisfactory operation, but is found to be necessary.

Numerous forms of arresters have been devised for preventing the occurrence of high potentials, static discharges, etc., which are generally termed "lightning."

The horn gap arrester was developed for outdoor installation and proved to be quite satisfactory under certain conditions for outdoor work. Various attempts have been made in the prior art to devise multigap arresters, fusible arresters and electrolytic arresters for accomplishing the same result. Generally speaking, these devices are of very much less rugged construction than the horn gap arresters, and although they are quite reliable in action, the care and protection necessary to keep them in operative condition has caused a persistent demand for a lightning arrester suitable for outdoor work of the same rugged and reliable qualities that characterizes the original horn gap arrester.

A peculiar difficulty has arisen at times in transmission systems employing horn gap arresters. It is well known that in the ordinary horn gap arrester, the dynamic current follows the lightning discharge and for a period running as high as a few seconds thereafter practically a short circuit current may be flowing. The dynamic current is very suddenly interrupted and has a tendency to cause high voltage surges to arise in the system due to reflected waves as well as a resonant condition of the system. This is especially likely to occur on a delta connected system having a swinging ground on one of the lines, and although the horn gap arrester is satisfactory for relieving the line of the original disturbance, it sets up conditions which are very destructive to the system so that under certain conditions the horn gap arrester does more harm than good. Numerous attempts have been made to cure this defect by inserting fuses in series with the horn gap, by inserting a series resistance and by placing a plurality of horns in parallel, but the operation has not been improved to an extent sufficient to warrant the adoption of such types of protective apparatus. If fuses or series resistances are employed, the initial discharge may not be great enough to relieve a line of the accumulated pressure: and in the case of fusible arresters, one discharge may render the protictive device inoperative until the fuse is replaced.

It is an object of the present invention to provide a horn gap arrester which will furnish a low resistance path during the formation of the initial discharge, but which will offer a path of increasing difficulty for the continued existence of the discharge.

It is a further object of this invention to provide a horn gap arrester which will prevent the formation of oscillations or surges in the system to which it is connected.

A still further object is to provide an arrester of improved construction and operation.

The various characteristics of the transmission system determine the possibility of the formation of high potentials and surges and, in each case, if a resistance of greater than a certain value for a given ratio of inductance to capacity can be inserted in the line, oscillations will practically be damped out of the system. We are employing this fact in the present arrester by breaking one of the horns up into a series of short sections connected together by high resistances.

In the accompanying drawings—Figure 1 is a side elevation of a horn gap arrester embodying our invention; Fig. 2 is a rear view of the left hand or sectional horn shown in Fig. 1; Fig. 3 is a section taken on the line 3—3 of Fig. 1; Figs. 4 and 6 are fragmentary views showing means for increasing the magnetic action and heat action respectively. Fig. 5 is a side elevation of a modification.

The particular embodiment which we have illustrated in Fig. 1 comprises a pair of horn electrodes 4 and 5 which are mounted upon a suitable base 6, shown, in this case, as a piece of channel iron. Electrode 4 is made of a bar of copper bent into the convential horn shape with a projecting knee at 7 which, together with the projecting knee 8, of the electrode 5, forms the throat of the arrester to promote the formation of an arc at this point. The electrode 4 is supported by a porcelain or other insulator 9, mounted on the base 6 in any convenient or preferred manner. The electrode 5 comprises a plurality of sections 10, 11, 12, 13 and 14, and it is obvious that a greater or less number of sections may be employed, as desired. These sections are formed of a horizontal portion, and the electrode portions of each of the sections form, in general outline, a broken horn shaped electrode separated by small air gaps 15 which may vary in size depending upon the amount of resistance included between the various sections. The supporting arm of each section is bolted to a bracket 16 suitably secured to the base 6. In the present case, the bracket 16 is composed of a piece of wood which may be suitably treated to insure its insulating properties. This bracket 16 is held by an angle piece 17 bolted to the channel 6. A bolt 18 passes through each of the sections and through a metal clip 19 on the opposite side of the bracket 16. These clips serve as terminals for connecting the sections by means of the high resistance conductors 20 which may be made of graphite or any of the commercial forms of high resistance rods well known in the art.

Commercial lengths of the resistance rod may be employed by suitably placing the joint between the rods in one of the clips 19, as is shown connected to the section 12. It is obvious that other forms of resistance may be employed and other means may be provided for mounting the sections of the electrode and for supporting the same, the form we have shown having been found to be convenient and having proved successful in operation.

It is found that there are two actions which cause the arc to rise in the throat of the horn—namely, the action due to the heat generated by the arc and the magnetic effect of the current flowing through the conductor and reacting upon the magnetic field of the arc.

In Fig. 4 we have illustrated a section of conductors which may be employed to promote the rising of the arc by augmenting the magnetic reaction. The conductor, instead of being formed as a flat bar may include two copper rods 22 and 23, and a soft iron sheath 24 partially or wholly surrounding one of said rods.

In the form shown in Fig. 4 the rear rod 23 is shown as surrounded by the sheath 24. The two rods 22 and 23 are closely united, no attempt being made to insulate the same. The result of this construction is an augmentation of the magnetic flux about the rod 23. This gives the conductors 22 and 23 different inductive qualities. High frequency currents will flow almost wholly through the conductor 22 because of the low impedance offered by this conductor. Dynamic current may flow with practically equal facility through both conductors.

The operation of the arrester is as follows: The "lightning" strikes across the point of least resistance—in this case across the points 7 and 8 as the air gap is shortest at this point. A very large discharge may occur while the arc is passing between the points 7 and 8 as the resistance of this circuit is practically negligable so far as the arrester itself is concerned, and the discharge would be limited only by the amount of resistance in other parts of the circuit. The heat of the arc and the magnetic reactions cause the arc to travel upward on the electrodes, the air immediately adjacent the arc being ionized, facilitating a wandering of the arc itself. The gaps 15 in the electrode 5 are of small proportions relative to the main gap and the arc readily slides over these gaps passing both through the resistance rod connecting the sections and through the gap 15 itself. The discharge across the gap 15, however, may be controlled by suitable proportioning and distribution of the resistance connecting the sections. As the arc travels upward, resistance is automatically cut in and this together with the increase in length of the arc itself causes a tapering off in current gradual enough to prevent any oscillations or surges being formed in the system.

In case of a second discharge, while the arc is still in existence, the high resistance which the arc current is compelled to traverse is no hindrance to the formation of an arc for discharging the second disturbance as the path across the points 7, 8 is entirely free of resistance external to the air gap itself. In this respect the device is unique in that it automatically includes resistance in the circuit of the arc without including the resistance in series with the

original air gap, thus forming selective paths for dynamic current which may be flowing through the arc and for a sudden high frequency disturbance which could more readily pass across the main gap itself.

In Fig. 5 we have shown a form in which the invention may appear. In this case the electrodes 4 and 5 are formed with a parallel portion extending for a considerable distance on the electrodes before the same flare out in the horn shape. The parallel construction facilitates the movement of the arc upward, and this movement is utilized to include the resistance connected between the sections of the electrode 5. The resistances connecting the sections shown in Fig. 5 may be made greater in view of the fact that the arc itself is not lengthened as it travels up the parallel portion of the electrodes. The lightning discharge will prefer the path across the points 7, 8 in view of the low resistance and the direct path which these points furnish.

We have shown, in addition, a fusible connection in the circuit of the arrester, the fusible link in this case being in the form of the well known fuse 25 connecting the bars 26 and 27, which are in turn secured to the terminal 28, and the section 10, respectively. The fuse 25 is shunted by a high resistance rod 29 which maintains at all times a path for current regardless of the condition of the fuse 25. The purpose of the fuse in this case is to aid in breaking a heavy dynamic arc if the horn electrodes should, for any reason, fail to break the flow of current.

The fuse is so proportioned that it will fail only under continued flow of excessive current, and it is not intended that this fuse should blow under ordinary circumstances in which the horn gap is capable of breaking the arc, but even if the fuse 25 does blow, the arrester will not be rendered ineffective, as is the case in the ordinary fused horn gap arrester, as the current may still flow through the resistance 29 or the flash of lightning, if of sufficient intensity, may jump the gap between the terminals 26 and 27.

A chute 30 made of wood or similar material (see Fig. 6) may be employed about either or both of the electrodes in order to increase the effect of the heated air in drawing the arc upward.

It can be seen that this arrester secures the advantage of ruggedness of construction and positive operation of the original horn gap arrester, and combines therewith the additional feature of automatically including resistance in series with the arc but maintaining selective paths for different frequencies and pressures of current.

The configuration of the electrodes may be varied. The lower part of the electrode may even be convergent for a short distance if so desired. In such form of arrester a particularly advantageous action is secured. The accumulated pressure on the line then has a number of selective paths. The path of least ohmic resistance, exclusive of the gap will be the path between the lowermost electrodes 7 and 8, but the spark gap is greatest at this point and greater voltage will be required to break it down. Hence the initial discharge will be across the shortest air gap which, however, is of small discharge capacity due to the limiting resistance in series therewith. Hence if this gap is insufficient, the next lower gap will be of greater discharge capacity and will break down to aid in relieving the pressure. But the blowout action tends to drive the arc on up and tends to keep it in series with high resistance and to drive it to a path of successively greater and greater resistance. This action is entirely automatic. This form of arrester is inherently selective in its action.

We do not intend to be limited to the precise details shown and described, as it is obvious to those skilled in the art that numerous changes and modifications may be made without departing from the spirit and scope of our invention.

What we claim as new and desire to secure by Letters Patent of the United States is:

1. In a lightning arrester, a horn electrode having a terminal and a free end remote from said terminal, said electrode having a projecting portion intermediate said end and said terminal for inducing the formation of an arc at said projecting portion, a low resistance portion between said projecting portion and said terminal, and a high resistance portion between said projecting portion and said free end said electrode being broken into a plurality of short sections throughout its length.

2. In a lightning arrester, a pair of electrodes, each of said electrodes having a terminal portion, a free end portion and an intermediate projecting portion, one of said electrodes being provided with a connecting portion between the projecting portion and the free end portion including a conductor of high resistance and a resistance connected between said projecting portion and said terminal portion.

3. In a horn gap arrester, a pair of discharge electrodes, a terminal connected to one of said electrodes, a second terminal for said other electrode, a high resistance conductor connecting said second electrode, and said second terminal, and a fuse shunting said resistance.

4. In a horn gap arrester, a base, a pair of horns supported by said base but insulated therefrom, one of said horns comprising a plurality of metal sections secured to

said base, high resistance conductors connecting said metal sections, a terminal for one of said horns, a high resistance conductor connecting said terminal with said horn, a fusible conductor shunting said high resistance conductor.

5. In combination, a pair of electrodes having terminal portions and flaring portions and having a minimum air-gap tending to cause a discharge to occur at that point, said terminal portions having a greater distance between them than said minimum air-gap, one of said electrodes including a plurality of sections between the minimum air-gap and the terminal portions, and a high resistance connected between the minimum air-gap portion and one of the terminals.

6. In combination, a pair of horn electrodes, each of said electrodes having a flaring portion and a terminal portion, one of said electrodes having a projecting portion to determine the point at which discharge will tend to occur, one of said electrodes including a plurality of sections, and a high resistance connecting one of said sections where the discharge tends to occur, with the terminal portion.

In witness whereof, we hereunto subscribe our names, this 10th day of October, 1914.

EDMUND O. SCHWEITZER.
NICHOLAS J. CONRAD.

Witnesses:
JOHN A. DIENNER,
LESLIE W. FRICKE.