Aug. 29, 1967 E. B. MITCHELL 3,339,050

SWITCH-HOUSING

Filed April 18, 1966

Fig. 1.

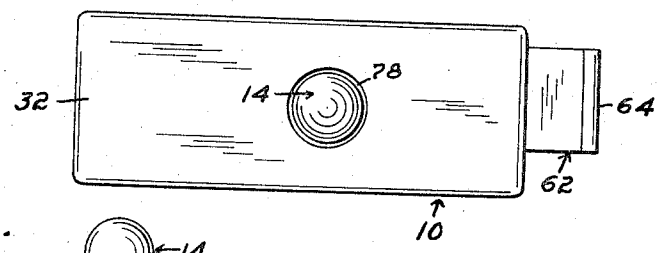

Fig. 2.

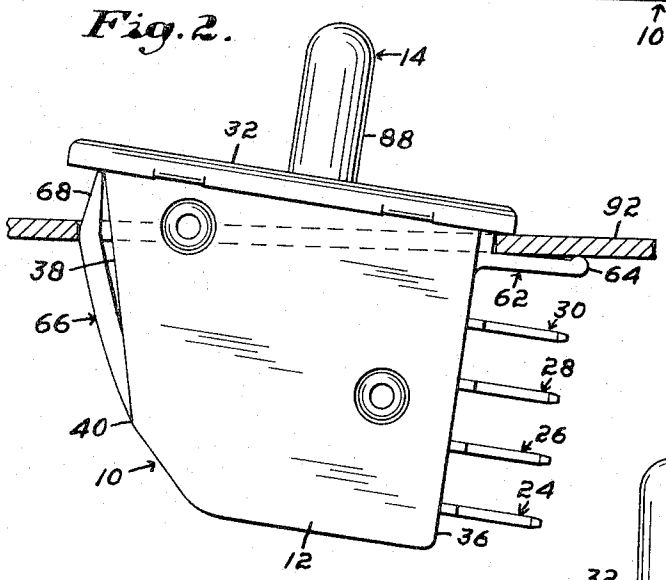

Fig. 3.

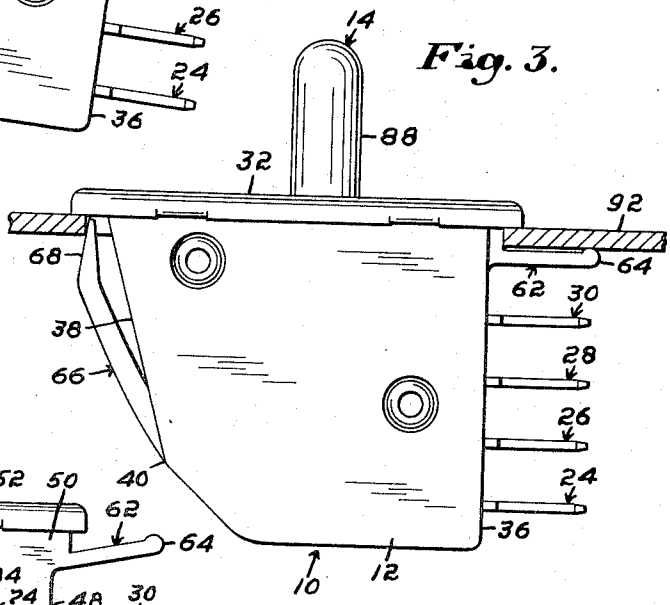

Fig. 4.

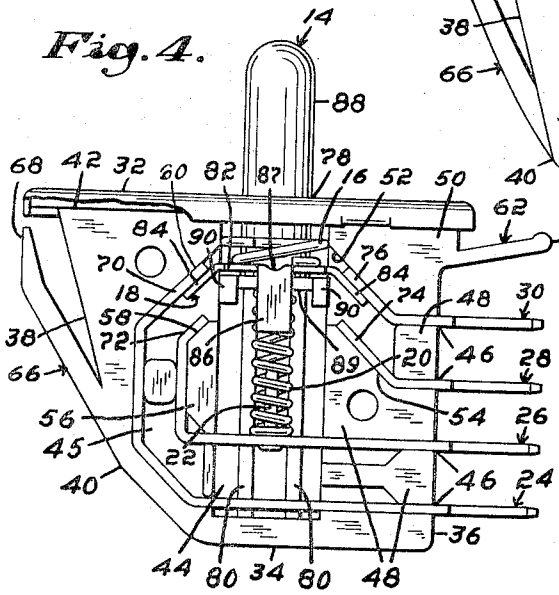

Inventor:
Edward B. Mitchell,
by John Hoffman
Atty.

United States Patent Office 3,339,050 Patented Aug. 29, 1967

3,339,050

SWITCH-HOUSING

Edward B. Mitchell, Woburn, Mass., assignor to United-Carr Incorporated, Boston, Mass., a corporation of Delaware

Filed Apr. 18, 1966, Ser. No. 543,248
4 Claims. (Cl. 200—168)

ABSTRACT OF THE DISCLOSURE

This application discloses a housing having a back acting arm extending from one wall and a leg extending in an acute angle of relationship from another wall. The back acting arm being in close spaced relation to a cap portion which acts in cooperation with both the arm and leg to engage an apertured support.

This invention relates generally to switches and more specifically to a two-circuit switch.

In the past, single pole double throw switches have been utilized to provide two circuits. Some wiring conditions require that two separate sets of terminals be used and this in turn requires two separate complete circuits which cannot be accomplished by the single pole double throw switch.

An object of the present invention is to provide a switch which can accommodate two independent circuits.

Another object of the present invention is to provide a switch housing having flexible means of engaging an apertured support.

Still another object of the present invention is to provide a fastening means for a switch housing which has a single leg whose plane traverses the plane of another leg spaced from the single leg and used to complete the attachment.

In the drawing:

FIG. 1 is a top plan view of the switch;

FIG. 2 is a side elevation of the switch partially engaged to a support;

FIG. 3 is a side elevation of the switch fully engaged to a support; and

FIG. 4 is a side elevation of the switch with the cover plate removed.

In the drawings there is shown a switch comprising a housing **10**, a cover plate **12**, a plunger **14**, a plunger spring **16**, a movable contact **18**, a return spring **20**, a guide pin **22**, a set of four fixed contacts, namely a first contact **24**, a second contact **26**, a third contact **28**, and a fourth contact **30** and a cover **32**.

The unitary housing **10** formed of an insulating material comprises a base portion **34** having a rear wall **36** extending from an end thereof, in right angle relationship therewith and a forward wall **38** which extends in angular relation from the other end of the base portion **34** and changes direction a predetermined distance from the base portion **34** to form a knuckle **40** and then continues to the same plane at which the rear wall **36** terminates. The end of the rear wall **36** and the end of the forward wall **38** are connected by a cap portion **42** which is wider than the rear wall or the forward wall and which extends beyond the distance between the external surfaces of the rear wall and the forward wall. A back wall **44** connects the cap portion **42**, the forward wall **38**, the rear wall **36** and the base portion **34** thereby providing a cavity **45** as shown in FIG. 4. A series of four slots **46** is formed through the rear wall **36**, and three separator portions **48** extend from the rear wall **36** into the cavity **45**, integral with the back wall **44** and in spaced relation to each other. An upper separator portion **50** connects the rear

wall **36** and the cap portion **42** extending into the cavity **45** and includes an angular face **52**. The middle of the three separator portions **48** includes a face **54** in parallel spaced relation to the angular face **52**. A stud portion **56**, having an angular surface **58**, is spaced from the uppermost separator portion **50** spaced from the forward wall **38**, within the cavity **45**. A rearwardly facing surface **60** connects the cap portion **42** and the forward wall **38** in spaced parallel relation with the angular surface **58** of the stud portion **56** as shown in FIG. 4. A flexible rear leg **62** extends from the rear wall **36**, in close proximity to the cap portion **42** and forms an acute angle with the rear wall **36**. The rear leg **62** has a free terminal end **64** which is rounded and thereby provides an arched upper surface slightly below the plane of the lower surface of the cap portion **42**. A flexible arm **66** extends forwardly from the knuckle **40** and is then bent proximate its terminal end to provide a terminal portion **68** in parallel relation with the rear wall **36**. The terminal portion **68** lies below the plane of the underside of the cap portion **42**.

The first fixed contact **24** has an engagement portion **70** butted against the rearwardly facing surface **60** of the housing **10** and then rests against the inner surface of the forward wall **38** of the housing **10** and is then bent to pass through the axial mid-plane of the cavity **45** in close proximity to the base portion **34** and then through the lowest slot **46** to extend beyond the housing **10**.

The second fixed contact **26** has its terminal engagement portion **72** butted against the angular surface **58** of the stud portion **56**, then along the outer surface of the stud portion **56** until it is bent to pass through the axial mid-plane of the cavity **45** in spaced relation to the first fixed contact **24**, then out through the second slot **46**. The first fixed contact **24** and the second fixed contact **26** are insulated from each other by one of the separator portions **48**.

The third fixed contact **28** has its contact portion **74** butted against the face **54** of the middle separator portion **48** and then passes through the slot **46** and beyond the housing **10**.

The fourth fixed contact **30** has its terminal contact portion **76** butted against the angular face **52** of the upper separator portion **50** and then extends through the top slot **46** and beyond the housing **10**.

The guide pin **22** extends from the second fixed contact **26** toward the cap portion **42** along a continuation of the axis of an aperture **78** formed through the cap portion **42** and the cover **32**.

The surface of the back wall **44** has a pair of ribs **80** formed thereon which extend from the base portion **34** to a point near the cap portion **42** thereby providing three channels between the stud portion **56** and the separator portions **48** as shown in FIG. 4.

The movable contact **18** comprises a rectangular support portion **82** having an aperture formed therethrough and having a contact leg **84** extending from each of two opposed sides and a support leg **86** extending from each of the remaining sides in right angle relationship thereto and toward the same plane as that toward which the contact legs **84** are directed. The rectangular support portion **82** adjacent or in close proximity to each of the support legs **86** has a proturberance **87** formed therein directed toward the plane toward which the support legs **86** are directed.

The contact legs **84** are in angular relation to the support portion **82**.

The plunger **14** comprises a tubular shank **88** closed at one end and having a rectangular flange **89** extending radially from the other end. Each of the two opposed sides of said rectangular sides has a projection **90** formed at each corner for purposes to be explained hereinafter.

To assemble the switch the tubular shank **88** of the plunger **14** is passed through the aperture formed in the support portion **82** of the movable contact **18**. This places each of the support legs **86** between a pair of projections **90**, with the protuberances **87** butted against the rectangular flange **89**, the plunger spring **16** is then placed around the tubular shank **88** and into abutting relationship with the support portion **82** of the movable contact **18** and this whole assembly is engaged with the housing **10** by passing the shank **88** through the aperture formed in the cap portion **42** with the spring, flange portion and movable contact within the cavity **45** and two of the projections **90** riding within the channels formed by the ribs **80** as shown in FIG. 4.

The contacts **24** through **30** are placed within the cavity **45** as shown in FIG. 4 with the engagement portion **70** of the first fixed contact **24** butted against the rearwardly facing surface **60** of the housing **10**. One of the contact legs **84** of the movable contact **18** lies between the engagement portion **70** of the first fixed contact **24** and the terminal engagement portion **72** of the second fixed contact **26**. The other contact leg **84** lies between the terminal contact portion **76** of the fourth fixed contact **30** and the contact portion **74** of the third fixed contact **28**. A return spring **20** is passed around the guide pin **22** and engaged against a slight recess formed in the flanged portion of the plunger **14**. This spring normally biases the movable contact **18** against the engagement portion **70** of the first fixed contact **24** and the terminal contact portion **76** of the fourth fixed contact **30** as shown in FIG. 4. A cover **12** may now be attached to the housing by many different means; for example, rivets as shown in FIGS. 2 and 3, completing the assembly. A metal cover **32** may be placed over the cap portion **42** for decorative and protective purposes, if desired.

As noted heretofore, in a normal position the return spring **20** biases the movable contact **18** against the first and fourth fixed contacts thereby completing the circuit therebetween. The protuberances **87** act as pivot points on the rectangular flange **89** and assure contact mating between contact **24**, **30** and the movable contact **18**. If the plunger should be axially depressed toward the base portion **34** of the housing **10**, the contact legs **84** of the movable contact **18** will be moved into abutting relationship with the engagement portions of the second and third fixed contacts thereby completing a second circuit. This movement is brought about by the plunger spring **16** which on depression of the plunger **14** is freed of the restrictions applied to it by a return spring **20** and is then capable of biasing the movable contact into engagement with the second and third fixed contact.

To engage the switch to a rectangular apertured support **92** the rear leg **62** is passed under the support **92** as shown in FIG. 2 until the edge of the aperture abuts against the rear wall **36** between the rear leg **62** and the overhang provided by the cover **32**. If pressure is applied to the cover **32** toward the support **92**, in close proximity to the flexible arm **66**, the arm **66** will flex toward the body of the housing **10** until the upper surface of the

support butts against the cover **32** and the terminal portion **68** of the flexible arm **66** engages against an edge of the aperture.

With reference to the foregoing description it is to be understood that what has been disclosed herein represents only a single embodiment of the invention and is to be construed as illustrative rather than restrictive in nature and that the invention is best described by the following claims.

What is claimed:

1. A one-piece housing for an article of manufacture, said housing an insulating material having a forward wall, a rear wall and a cap portion connecting said forward wall and said rear wall, said forward wall having an arm extending therefrom in acute angular relation thereto, said arm having a terminal portion in spaced relation to said rear wall and spaced from and proximate to said cap portion and said rear wall having a leg extending therefrom in acute angular relationship therewith whereby said leg and said arm are adapted to engage an aperture formed in a support and extended toward the plane of said cap portion.

2. A housing as set forth in claim **1** wherein said arm extends in a direction substantially opposite to that of said leg for the major portion of its length, and said leg extends beyond the area defined by said cap portion.

3. A housing as set forth in claim **2** wherein said forward wall, said rear wall, and said cap portion are connected by a back wall and define a cavity, and said back wall has a pair of ribs extending therefrom in spaced parallel relation to each other.

4. The combination of a support having an aperture formed therein and a unitary housing for an article of manufacture, said housing having a forward wall, a rear wall and a cap portion connecting said forward wall and said rear wall, said forward wall having an arm extending therefrom in acute angular relation thereto toward the plane of the cap portion, said arm having a terminal portion in spaced parallel relation to said rear wall and spaced from said cap portion and said rear wall having a leg extending therefrom in acute angular relationship therewith and said leg engaging the undersurface of said support in close proximity to said aperture and said arm engaged against the wall of said aperture and said cap portion having a length greater than the length of said aperture and being in superposed relationship to a portion of said support.

References Cited

UNITED STATES PATENTS

2,424,757	7/1947	Klumpp	174—153
2,884,503	4/1959	Connelly	200—67
2,891,103	6/1959	Swengel	174—153
3,049,600	8/1962	Fraser	200—67
3,244,941	4/1966	Maynard et al.	200—168

ROBERT K. SCHAEFER, *Primary Examiner.*

H. O. JONES, *Assistant Examiner.*