Oct. 9, 1962 D. E. ATKINSON 3,057,488

CONTROL SYSTEM

Filed July 21, 1959 3 Sheets-Sheet 1

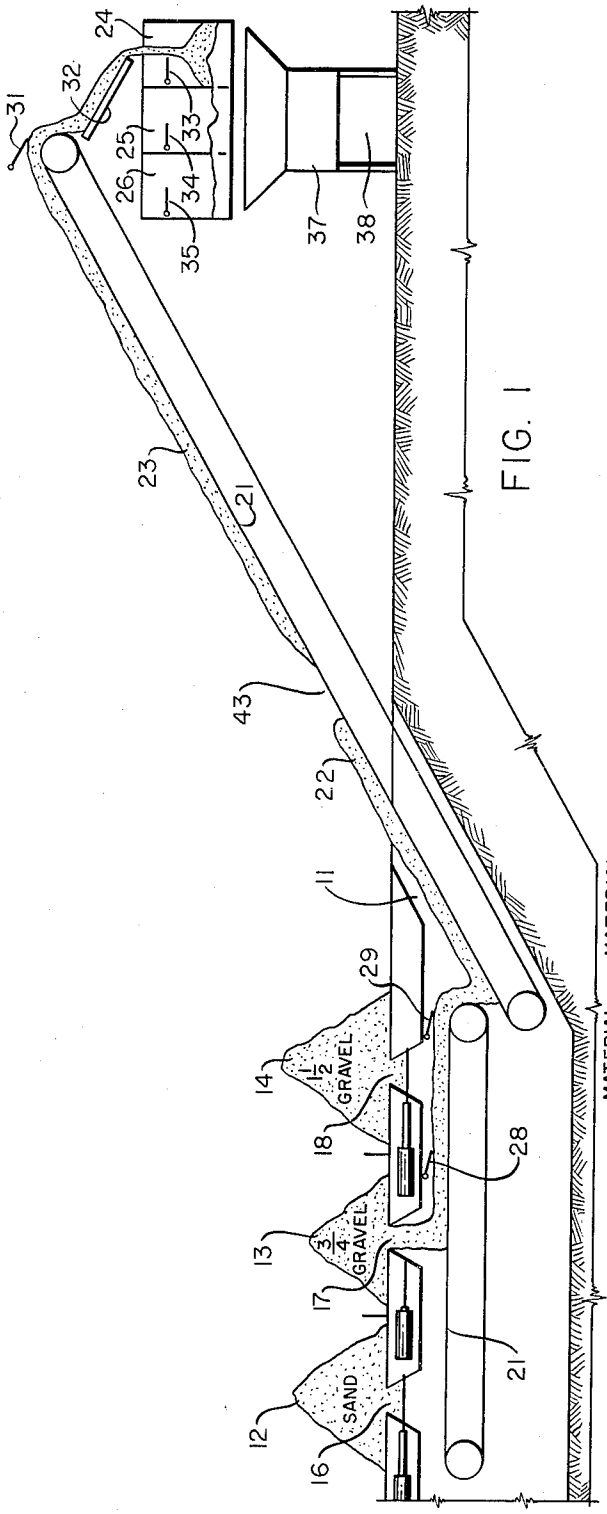


FIG. 1

FIG. 2

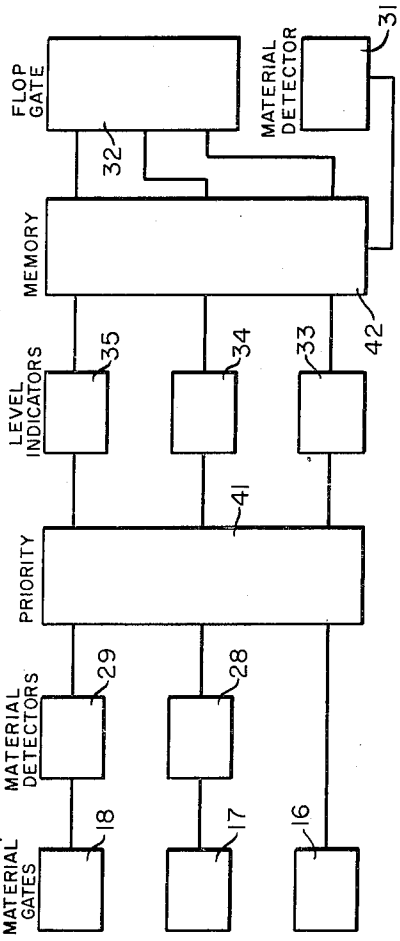


DUANE E. ATKINSON
*INVENTOR.*

BY Fleker and Swain
ATTORNEYS

Oct. 9, 1962 D. E. ATKINSON 3,057,488

CONTROL SYSTEM

Filed July 21, 1959 3 Sheets-Sheet 2

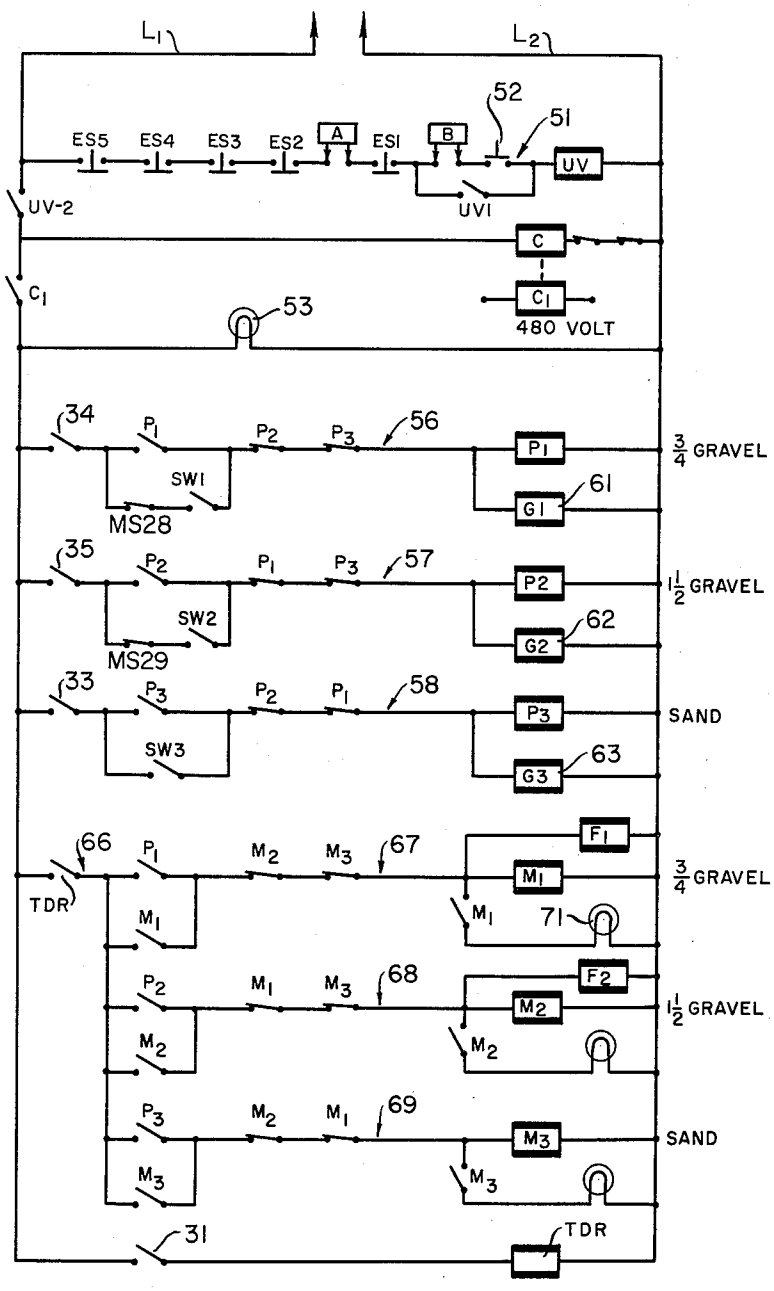


FIG. 3

DUANE E. ATKINSON
*INVENTOR.*

BY

Fleh and Swain

ATTORNEYS

Oct. 9, 1962 D. E. ATKINSON 3,057,488

CONTROL SYSTEM

Filed July 21, 1959 3 Sheets-Sheet 3

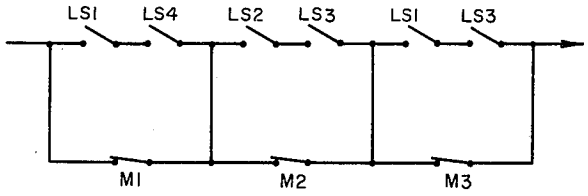


FIG. 4

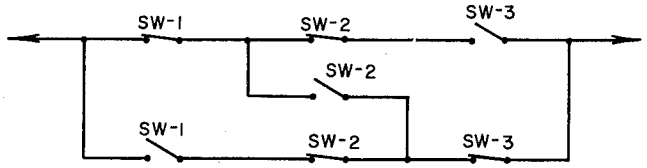


FIG. 5

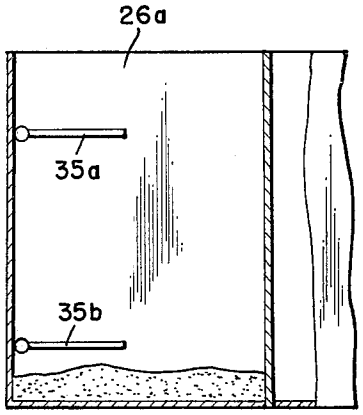


FIG. 6

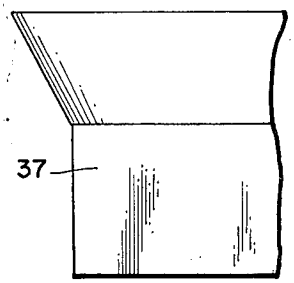


DUANE E. ATKINSON
*INVENTOR.*

*BY*
Fleck and Swain
ATTORNEYS

United States Patent Office

3,057,488
Patented Oct. 9, 1962



3,057,488

# CONTROL SYSTEM

Duane E. Atkinson, 102 Fey Drive, Burlingame, Calif.

Filed July 21, 1959, Ser. No. 828,487
2 Claims. (Cl. 214—17)

This invention relates generally to a control system and more particularly to a control system suitable for controlling the operation of conveyors such as employed in aggregate batching plants.

In an aggregate batching plant it is necessary to mix predetermined amounts of aggregates of various sizes such as sand, ¾ inch, and 1½ inch rock. In general, the sand and rock are stored in large storage piles. The materials are transferred by a conveyor belt to the storage bins of the aggregate mixing plant. The material is diverted into the proper bin by deflection means which may be of the flop gate type.

In normal operation, the batching plant feeds from the bins varying amounts of sand and gravel to form a suitable batch. The bins merely serve as a temporary storage means from which specific amounts of material are mixed to form a batch which can then be mixed with cement and water to form concrete, or may be dry batched into a transit mix truck for haulage to the point of use.

Generally, the bins are relatively small. In conventional plants, when one of the bins at the top of the batch plant is empty or nearly so, an operator starts the conveyor belt and then starts to load the proper material onto the belt. For example, if the sand bin is running low, sand is fed onto the conveyor belt. The conveyor belt transports the sand to the bin and the deflection means serves to divert the sand into the sand bin. When the bin is almost full, feeding of material onto the belt is stopped. The conveyor belt is allowed to continue running until all the material on the belt is transferred to the bin. When there is no further material on the belt, the belt is either stopped, or if another material is required, it is fed onto the belt.

It can be seen that with smaller material storage bins at the top of the batch plant and/or with high rates of use of materials, the bins will have to be filled relatively often. In one particular batch plant operation, the bins had to be filled every five or ten minutes.

It can be seen that if the conveyor belt is relatively long, there is a large dead time of belt usage. The dead time corresponds to the time that lapses between the feeding of the selected material onto the belt and the delivery of the material to the proper bin. It is seen that the dead time is determined solely by the physical length of the belt and the physical speed of the belt. Both of these parameters are to a great extent dependent upon the particular installation and cannot be altered for a given length of belt and belt speed. The time delay or dead period in a given cycle may be of the order of from 30 seconds to perhaps as much as several minutes.

Therefore, every time that a switch is made from one material, say material A, to another material, say material B, and so forth, there is a loss of belt production time. That is, there is a period of time in which the belt is running but not actively carrying or transporting material from the storage piles to the storage bins. If the storage bins on the top of the batch plant are relatively small compared to the total amount of material used in a given period, say one hour or one shift, then it can be seen that the loading process will have to occur very frequently and filling will, on the other hand, require only a very short period of time since the bins cannot hold a large amount of material. However, it is desirable to have small bins at the top of the plant since the structure



may be of smaller size and lighter construction reducing the cost of the installation.

Quite often in a small batching plant, the belt must continuously replenish the material in the small bins at the top of the plant. It must do this quite frequently, perhaps as a continuous operation. In effect, it goes through a great number of individual cycles for each given material alternating back and forth between the various materials. Each time a cycle is made regardless of the time it takes to fill the bin, there is a loss of belt time because of the empty belt travel required in order to clear itself before conveying the next material. The result is that the size of the belt that must be installed to insure adequate production for a given plant is usually oversize compared to the amount of material which it actually transports.

By way of example, in one particular system a belt was used which would typically allow an average production of about 800 tons per hour. However, under the use just described, its average production was close to 500 tons an hour. Since the actual production required was only 500 tons, use of the 800 ton belt installation was necessarily more expensive than required.

It is a general object of the present invention to provide a control system for decreasing the dead time in a system of the above character.

It is another object of the present invention to provide a control system which allows an installation to be more nearly designed for working at full capacity.

It is a further object of the present invention to provide a control system which substantially increases the efficiency of the overall system.

It is a further object of the present invention to provide a control system in which a suitable control network serves to detect the requirement for material in the bins and the flow of material on the conveyor belt and selectively controls the application of material to the belt and diversion of the material from the belt into the respective bin, the system being such that the dead time is minimized.

These and other objects of the invention will become more clearly apparent from the following description when taken in conjunction with the accompanying drawing.

Referring to the drawing:

FIGURE 1 is a schematic diagram of an aggregate batching plant showing the location of the various sensing and switching means in the system:

FIGURE 2 is a block diagram showing a suitable control system;

FIGURE 3 is a detailed circuit diagram of a control system in accordance with the invention;

FIGURE 4 is a detailed diagram of a lock-out system used in the circuit of FIGURE 3;

FIGURE 5 is a detailed circuit diagram of another lock-out system used in the circuit of FIGURE 3; and

FIGURE 6 shows a modification of the bins which includes high and low level material detecting means.

Referring to FIGURE 1, there is a schematically illustrated a batching plant including a control system. A tunnel **11** runs beneath the storage piles of sand **12**, ¾ inch gravel **13**, and 1½ inch gravel **14**. Suitable electropneumatically controlled gates **16**, **17** and **18** are disposed beneath the piles and serve to control the application of material from the storage area onto the conveyor belt **21**. The gates may be, for example, solenoid controlled. In the illustration, the gate **17** is open and ¾ inch gravel is being fed onto the belt. This is indicated by the material **22** extending along the belt. Prior to the application of the ¾ inch gravel, sand or 1½ inch gravel **23** had been applied to the belt and is being con-

veyed towards the storage bins 24, 25 and 26 located at the top of the batch plant.

Material detecting means 28 and 29 are disposed along the belt and serve to detect the presence of material at the particular location. The material detecting means may be switches which have an arm adapted to be deflected by material on the belt. Other suitable detection means, for example, photoelectric, may be employed. The purpose of the material detecting switches will be presently described. Similarly, a material detecting means 31 is located at the top of the belt and serves to detect material at the top of the belt. A flop or diverting gate 32 is disposed below the belt and serves to direct the material into a selected one of the storage bins 24—26.

Material level sensing means 33, 34 and 35 are disposed in the storage bins. The material sensing means serve to sense the level of the material. For example, the sensing means may comprise a switch which is activated when the level of the material reaches the switch. Other types of sensing means, for example, acoustical, photoelectric and the like, may be employed in the bins for detecting the level of the material within the same.

The material from the bins 24, 25 and 26 is then removed through suitable gates (not shown) and collected in the batching bin 37. The material in the bin 37 may then be loaded onto trucks which pass in the area 38 for transport to a job location.

Referring again to the level controls 33—35, their function is to indicate electrically when the level of the material in the bin is at the level of the respective control. For a relatively small bin size, only a single level indicator or detector may be required rather than a high and low level indicator or detector. This is because if a given bin becomes too low and the level indicator is set to operate at this point, there will be a time delay before the first material can possibly reach the bin from the storage pile to start refilling. During this period, the bin will, of course, further decrease in level because of the continuous usage by the batch plant below. The material then arrives at this bin and begins to fill it; eventually it will reach the same level control that was previously actuated and will turn it off and thus stop the main flow onto the belt through one gate. However, another delay will be present during which time the material at the point stored on the belt will also be delivered to the bin, therefore, filling it up somewhat above the sensing level. The result is that for a small bin there will be an automatic differential in high and low levels of the bin with the use of a single level control. For a larger bin, high and low level controls can, of course, be used. High and low indicators 35*a* and 35*b* are shown disposed in a bin 26*a* in FIGURE 6.

A sequence of operation is described with respect to FIGURES 1 and 2. Assuming that the belt is running and empty, and that the material in bin 24 at the top of the plant is low, the level indicator 33 associated with that bin will indicate to the priority system 41 that it is at a low level and needs to be filled. Since it was assumed that the belt is empty, neither of the material switches 28 or 29 is deflected. The priority system is free and will allow the signal to pass directly to the material gate 16 to cause loading of the material 23. Simultaneously, the signal from the level indicator will "lock up" the priority system so that subsequent signals from the level indicators 34 or 35 in bins 25 or 26 will not pass to energize the material gates 17 or 18.

The signal from the level indicator also goes to a memory system 42. Since it was assumed that material was not being delivered previously, the memory system is free of previous instruction. When the material reaches material switch 31, the memory system 42 passes the signal from level indicator 33 to the flop gate 32, positioning it to deliver the material into bin 24. When the level indicator 33 indicates that the material has reached a predetermined level, it releases the priority system 41 allowing signals from the level indicators 34 or 35 to pass through the priority system. However, the memory system 42 is held in position corresponding to material 23 and "remembers" that this material is presently being delivered by the belt.

If during the process just described, one of the other bins 25 or 26 became low, the priority relay did not allow passage of the signal from level detectors 34 and 35 through the material detecting means 28 or 29 to the material gates. However, as soon as the level indicator 33 feeds the "full" signal to the priority system, it is released and will allow signals from the level detectors 34 or 35 to pass to the material detector means 28 or 29. If both level indicators 34 and 35 show a requirement for material, one of them will gain priority in the system and the other one will be locked out to await its respective turn.

Assume, for example, that the level indicator 34 indicates low level. It has not been able to control the system because the priority relays were tied up during the delivery of material 23. However, as soon as the level indicator 33 indicated full, the material being fed onto the belt through gate 16 was turned off and the priority relays released. The level indicator 34 can gain control. The signal goes through the priority system to the material detector 28. If the material detecting means 28 senses an absence of material on the belt, it allows the signal to pass to the gate 17 to cause ¾ inch gravel from the pile 13 to flow onto the belt.

It is noted that the material detector is located ahead of the ¾ inch gravel storage pile towards the batch plant on the conveyor belt. The distance will vary with installation. If material 13 gained control through the priority relays immediately after material 12 shut off, there would still be material 12 under the material 13 and it would fall on top of material 12. However, the material detector senses the presence of material and will not allow the signal to pass until there is an absence of material. By properly locating the switches 28 and 29 along the belt, any suitable gap 43 may be obtained between the materials. After the end of material 23 has passed by the switch, the switch allows the signal to pass to gate 17 to feed from the pile 13 onto the belt.

Thus, both materials are on the belt but there is provided a system which ensures that only one material is at a particular point on the belt and that there is a suitable spacing between materials. During this period of time, material 23 is still on the belt and flowing into the bin 24. As soon as the end of the material 23 passes the switch 31, it is released and releases the memory system which immediately passes a signal from the level indicator to the flop gate 32. The gate is diverted to divert material to the new bin 25. Thus, the signal from switch 31 releases the memory of material 23 and locks into the memory the material 22. The gap 43 between the two materials allows sufficient time for the flop gate to be diverted from bin 24 to bin 25.

The cycle then continues in this general form. The end effect is that the various small bins on top of the plant will call for more material through their level indicators as they drop in level. At any given time, only one of these materials will be selected by the priority relay 41 and only one material will actually be loading onto the belt at any given time. However, at the end of one loading period, the material detector will provide a minimum gap between that material and the next material, and then loading of the next material can begin without clearing the entire belt. Flop gates at the top of the structure, however, will not follow the level indicators but rather will remember their proper position and will not change from one material position to another until the exact time that a gap between these materials appears on the belt. This is accomplished by the memory system which, in turn, is reset by the next material being delivered past the detector 31.

It is observed that under this method the only time that the belt is not actually carrying material is during the short section between materials which, in a typical installation, is fifty feet or less of the belt. This distance can, of course, be decreased assuming that the flop gate can operate fast enough and the memory devices are accurate enough to allow even closer spacing of two types of material.

Instead of the belt delay being related to the entire physical length of the belt as it is in the prior art, it is now set to some fixed and very small empty distance. This allows the belt to be actively engaged in transporting material of one sort or another from the storage piles to the top of the batch plant during a much greater portion of its operating cycle. Therefore, the utilization or effective efficiency of the belt is increased. The degree of increase in efficiency or utilization depends upon the total length of the belt, the speed of the belt and the individual loading cycles per unit time, and minimum time delay under the automatic system required for separating the materials.

The logic and memory functions described can be accomplished by different types of devices, for example, electro-mechanical relays, magnetic amplifiers, transistors, vacuum tubes and the like.

The particular system described with respect to FIGURES 3–5 is an electromechanical relay system. Power to the control system is applied along the lines L–1 and L–2. Main power control is achieved through the circuit **51** which includes the serially connected emergency stop switches ES2–ES5, a circuit A shown in FIGURE 4, an emergency stop switch ES1, the circuit B shown in FIGURE 5, a start switch **52**, and the coil of undervoltage relay U. The relay UV includes contacts UV–1 and UV–2. The contact UV–1 serves to lock up the system once the coils are energized, and the contact UV–2 serves to connect the remainder of the control system to the lines L–1 and L–2. When the contact UV–2 is closed the contactor C is energized, starting the 480 v. conveyor belt drive motor. Relay C1 is an interlock relay which is energized when the conveyor belt drive motor is energized. When relay C1 is energized, contact C1 closes, supplying power from the lines L–1 and L–2 to the remainder of the control system. The indicating lamp **53** shows that the system is under power and in operation.

The priority system includes the networks designated generally by the reference numerals **56**, **57** and **58**. The network **56** comprises a series circuit including the level sensing means **34**, a contact of priority relay P1, a contact of priority relay P2, and a contact of priority relay P3. The contact P1 is normally open when relay P1 is not energized, while the contacts P2 and P3 are normally closed when relays P2 and P3, respectively, are not energized.

The coil of a gate solenoid G1, the ¾ inch rock solenoid, for example, is connected in parallel with the relay coil P1. A serially connected manual switch SW1 and the material switch MS28 are connected in shunt with the normally open contact of relay P1.

Assuming the foregoing conditions in which the belt is empty and that the level sensing means **34** indicates low level by a closure of the contacts, then if the manual switch SW1 is closed, there will be a completed circuit including the switch **34**, material switch **28**, switch SW1, and contacts P2 and P3 of the priority relays, thus energizing the coils P1 and G1. The coil P1 then closes the contact P1 forming a new circuit so that when the material switch **28** is open by material flowing past same, the system remains locked in the priority indicated. The gate G1 is opened. If a signal is received from one or the other level indicators **33** or **35**, it is observed that the series circuit path including the coils P2 and P3 will be open since the contacts P1 in these lines are open when the coil P1 is energized. Thus, the ¾ inch rock will retain priority until the switch **34** is again opened, at which time P1 and G1 are deenergized, the contact P1 opens and the contacts P1 in the circuits **57** and **58** close allowing the next priority to take command.

The circuit **57** is similar to that described and includes the series combination of level sensing means **35**, normally open contact of relay P2, and normally closed contacts of relays P1 and P3. Likewise, it includes the gate solenoid G2 for controlling the loading gate. The circuit **57** also includes the parallel combination of the material switch MS29 and manual switch SW2.

The circuit **58** is similar and includes the series combination of level indicator **33**, normally open contact of relay P3, and normally closed contacts of relays P2 and P1. The manual switch SW3 is connected in shunt with the contact of relay P3, and the gate solenoid G3 is connected in shunt with the coil of the relay P3.

It is observed that the circuits **56**, **57** and **58** are related whereby only a single one of the circuits may be operated at any given time, giving the priority or lock-out feature.

The circuit **66** including branches **67**, **68** and **69** forms the memory element and the flop gate control circuit previously described. The switch **31** which is normally closed when material is flowing past the same serves to control the energization of the time delay relay TDR whose contact closure controls application of power to the circuit **66**. Referring to the memory circuit **67**, it includes the parallel, normally open contacts of relays P1 and M1, and the normally closed contacts of the relays M2 and M3 of the memory relay coils associated with the branch circuits **68** and **69**. The flop gate control solenoid coil F1 is connected in the circuit **67** as well as a contact of relay M1 which serves to control application of power to a light source **71** for indicating the material being delivered to the bins.

In the foregoing example, the solenoid P1 had been activated to feed ¾ inch rock into the bins. The contact P1 in the circuit **67** is closed. When material reaches switch **31**, relay TDR is energized and the contact TDR immediately closes. The relay M1 is energized closing the contact in this circuit and opening the contacts M1 and M2 in the circuits **68** and **69**. As soon as the level indicator **34** indicates the level is sufficient, the relay P1 is de-energized. However, it is observed that the relay contact M1 remains closed until the material switch **31** opens, at which time the coil is de-energized. It is also observed that during this period of time that no new signal can be entered by the relays P2 and P3 since there is an open circuit for the contact closures M1 in the two circuits **68** and **69**. There is a delay in opening of the contact TDR which is sufficient to allow feeding of material beyond switch **31** into its bin before the flop gate is moved .

As soon as the switch **31** is again closed by the new material, the three circuits are in condition for receiving a new signal from one of the priority relays P2 or P3 which again locks up the system and serves to repeat the operation described. The inherent delay between the time of the new activation of the switch **31** and the pouring of material onto the flop gate is sufficient to allow the gate to flop to the new material prior to application of material thereto.

Thus, it is seen that the circuit **66** including branches **67**, **68** and **69** forms the memory element previously described.

Referring to FIGURE 4, the circuit A is illustrated as including normally closed closures of relays M1, M2 and M3, and the limit switches LS1, LS2, LS3 and LS4 in a circuit combination which assures that the system stops if the flop gates do not reach their proper final position within the time limit set by closure of the relays M1, M2 and M3. These contacts open after a short time delay after relays M1, M2 and M3 are energized.

In FIGURE 5, a circuit is provided which prevents restarting the system unless one and only one of the switches SW1, SW2 and SW3 are initially closed. This is for restarting the system with a loaded belt. Only the switch corresponding to the material on the belt should be closed

at this time. When the system is fully operating, the other switches may be closed. For normal starts, the switch corresponding to the material first desired is switched on, and as soon as the system is started the complete system is thrown into operation.

Thus, it is seen that there is provided a novel system for controlling aggregate loading in a batch plant and the like. The control system is relatively simple in construction and yet provides for the maximum utilization of the conveyor belt by considerably reducing the dead time. A belt of given capacity can be operated continuously near its maximum capacity reducing the initial expense of the belt and also increasing the overall capacity and efficiency of the system.

I claim:

1. An automatic control for a system of the type in which a conveyor belt selectively conveys one of a plurality of materials from prime storage areas to selected storage areas, said system including means for selectively feeding material onto the belt and means for selectively directing material from the belt into respective storage areas comprising material detecting means located along the belt and serving to detect presence of material on the belt, material requirement sensing means serving to sense the requirement of material at the selected storage area, and a priority system connected in circuit with said material requirement sensing means and said material presence detecting means, said circuit combination serving to transmit signals from the material sensing means to the respective selective feed means only when there is no other material being fed onto the belt and when there is no material on the belt adjacent the respective selective feed means, material converting means cooperating with said conveyor to divert material therefrom to any of the selected storage bins, a memory circuit serving to remember the material delivered to the belt previous to the application of new material and serving to hold the diverting means to continue to deliver said material to its respective storage bin until the material is completely delivered from the belt, and then shifting the diverting means to divert material into the new selected storage area.

2. Apparatus as in claim 1 wherein said memory system includes a switch located at the discharge end of the belt and serving to hold the memory circuit until there is an absence of material at the switch, at which time it releases the memory to receive a new memory signal from the priority system and is locked into a new memory.

**References Cited** in the file of this patent

UNITED STATES PATENTS

| | | |
|---|---|---|
| 2,792,923 | Fraubose | May 12, 1957 |
| 2,931,521 | Hartley | Apr. 5, 1960 |

FOREIGN PATENTS

| | | |
|---|---|---|
| 687,152 | Great Britain | Feb. 11, 1953 |
| 786,199 | Great Britain | Nov. 13, 1957 |