United States Patent [19]

Lewis

[11] **Des. 246,205**

[45] ** **Oct. 25, 1977**

[54] **COMBINED WALLET AND CALCULATOR**

[76] Inventor: **Peter Howard Lewis,** 12A Turtle Cove Villas, Redhill Road, Tai Tam, Hong Kong

[**] Term: **14 Years**

[21] Appl. No.: **613,863**

[22] Filed: **Sept. 16, 1975**

[51] **Int. Cl.** ..... **D3—01**

[52] **U.S. Cl.** ..... **D87/3 A**

[58] **Field of Search** ..... D87/3 A, 3 B; D26/5 C; 150/38, 39, 34, 28 R, 35; D19/26–28; D64/11 B

[56] **References Cited**

U.S. PATENT DOCUMENTS

D. 196,099	8/1963	Sirley	D19/27
D. 202,859	11/1965	Feder	D87/3 A
D. 208,614	9/1967	Cuniker	D87/3 A
D. 216,173	11/1969	Kogutt	D87/3 A
D. 227,770	7/1973	Yamamoto	D26/5 C
D. 241,381	9/1976	Garnier	D87/3 A

Primary Examiner—Joel Stearman
Assistant Examiner—George P. Word
Attorney, Agent, or Firm—Martin Fleit

[57] **CLAIM**

The ornamental design for a combined wallet and calculator, substantially as shown and described.

DESCRIPTION

FIG. **1** is a perspective view of a combined wallet and calculator showing my new design in an open position;
FIG. **2** is a rear elevational view thereof;
FIG. **3** is a left side elevational view; and
FIG. **4** is a perspective view of FIG. **1** in a closed position, the exterior surface not shown corresponding to the opposite exterior surface as shown.

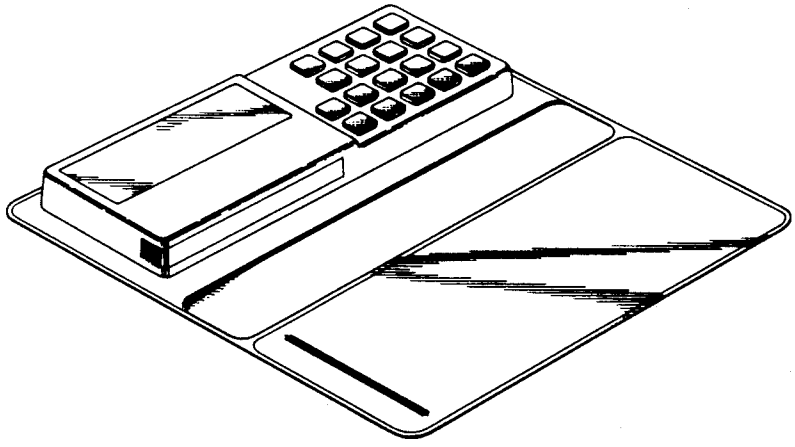

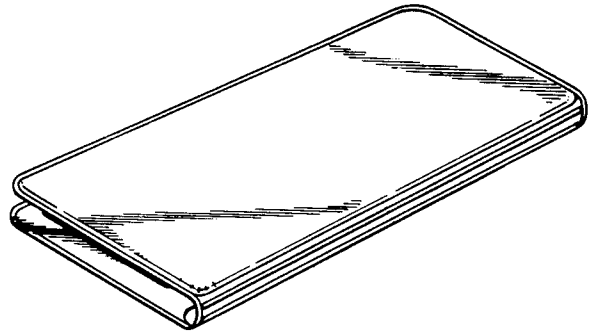

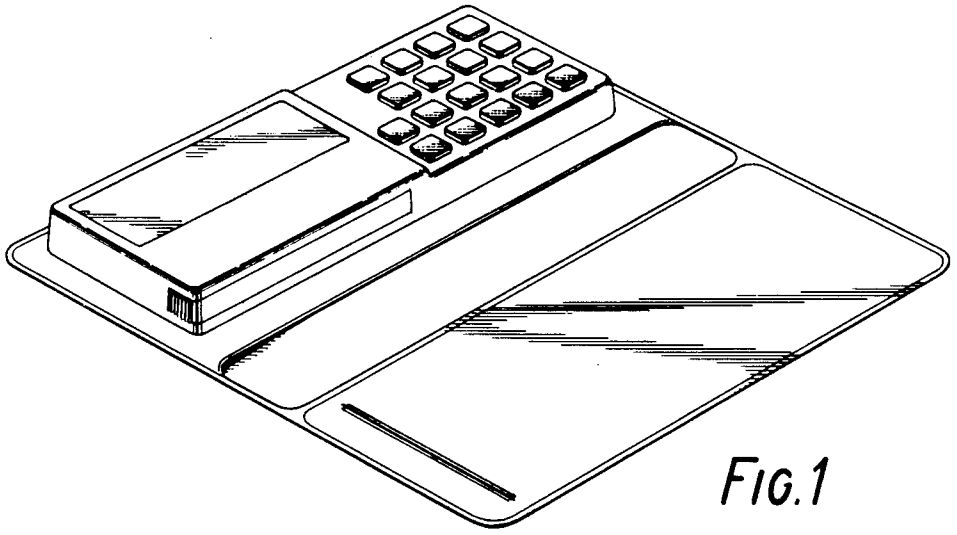

FIG. 1



FIG. 2



FIG. 3

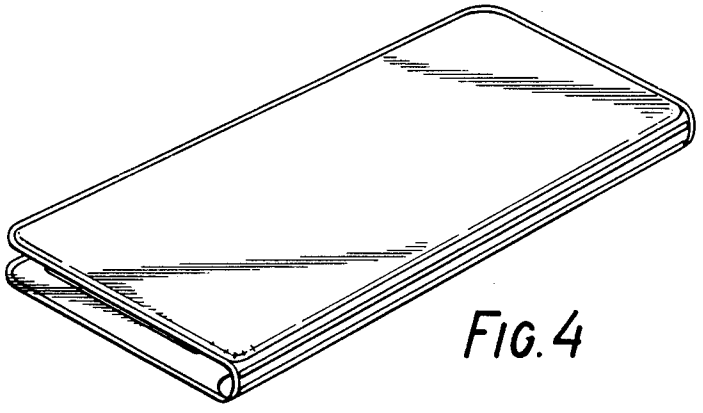

FIG. 4