(No Model.)

5 Sheets—Sheet 1.

J. C. GITHENS.

NUT THREAD CUTTING MACHINE.

No. 456,324. Patented July 21, 1891.

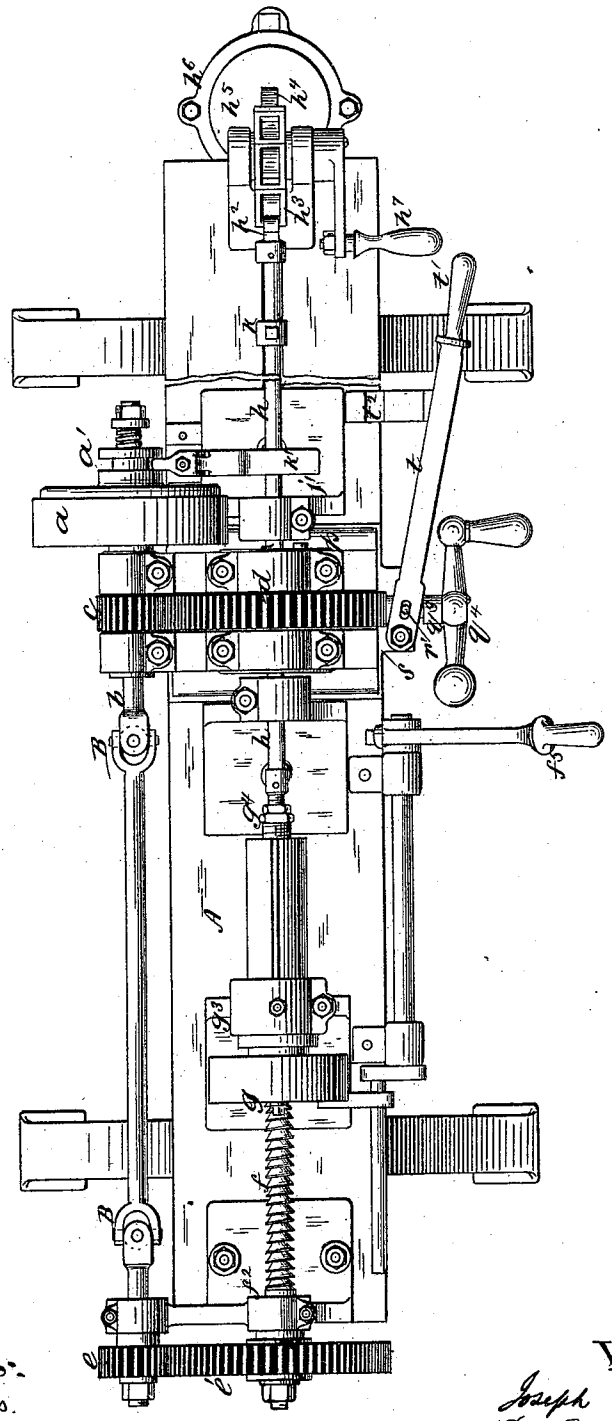

Fig. 1.

Witnesses:
J. E. Burns.
A. M. Jones.

Inventor:
Joseph C. Githens.
Per Edw. E. Lumby,
Atty

THE NORRIS PETERS CO., PHOTO-LITHO., WASHINGTON, D. C.

(No Model.) 5 Sheets—Sheet 2.

J. C. GITHENS.

NUT THREAD CUTTING MACHINE.

No. 456,324. Patented July 21, 1891.

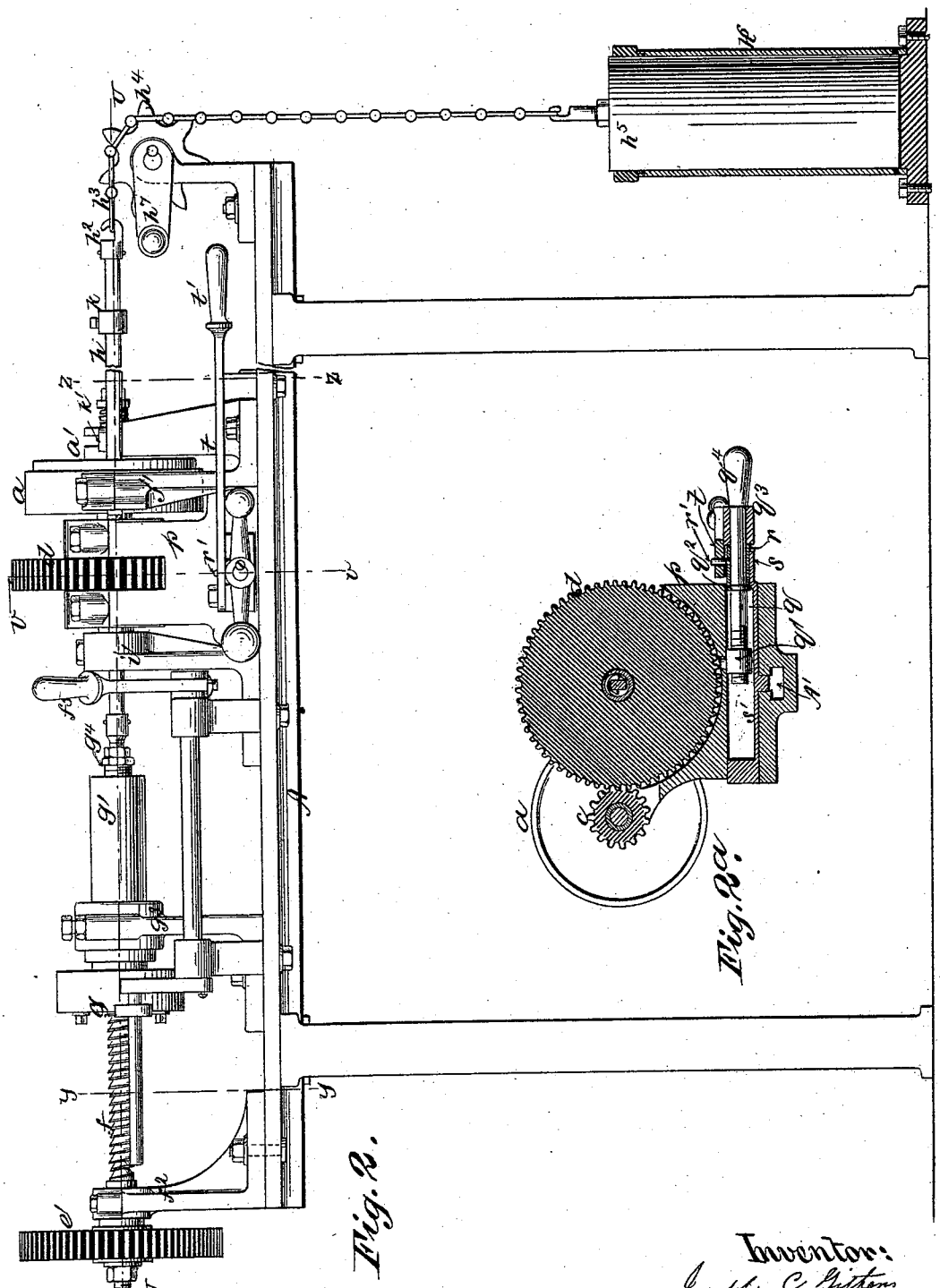

Fig. 2.

Fig. 2a.

Witnesses:
A. M. Jones
J. E. Burns

Inventor:
Joseph C. Githens,
Per Edw. E. Lemmon,
Atty.

THE NORRIS PETERS CO., PHOTO-LITHO., WASHINGTON, D. C.

(No Model.) 5 Sheets—Sheet 3.

J. C. GITHENS.

NUT THREAD CUTTING MACHINE.

No. 456,324. Patented July 21, 1891.

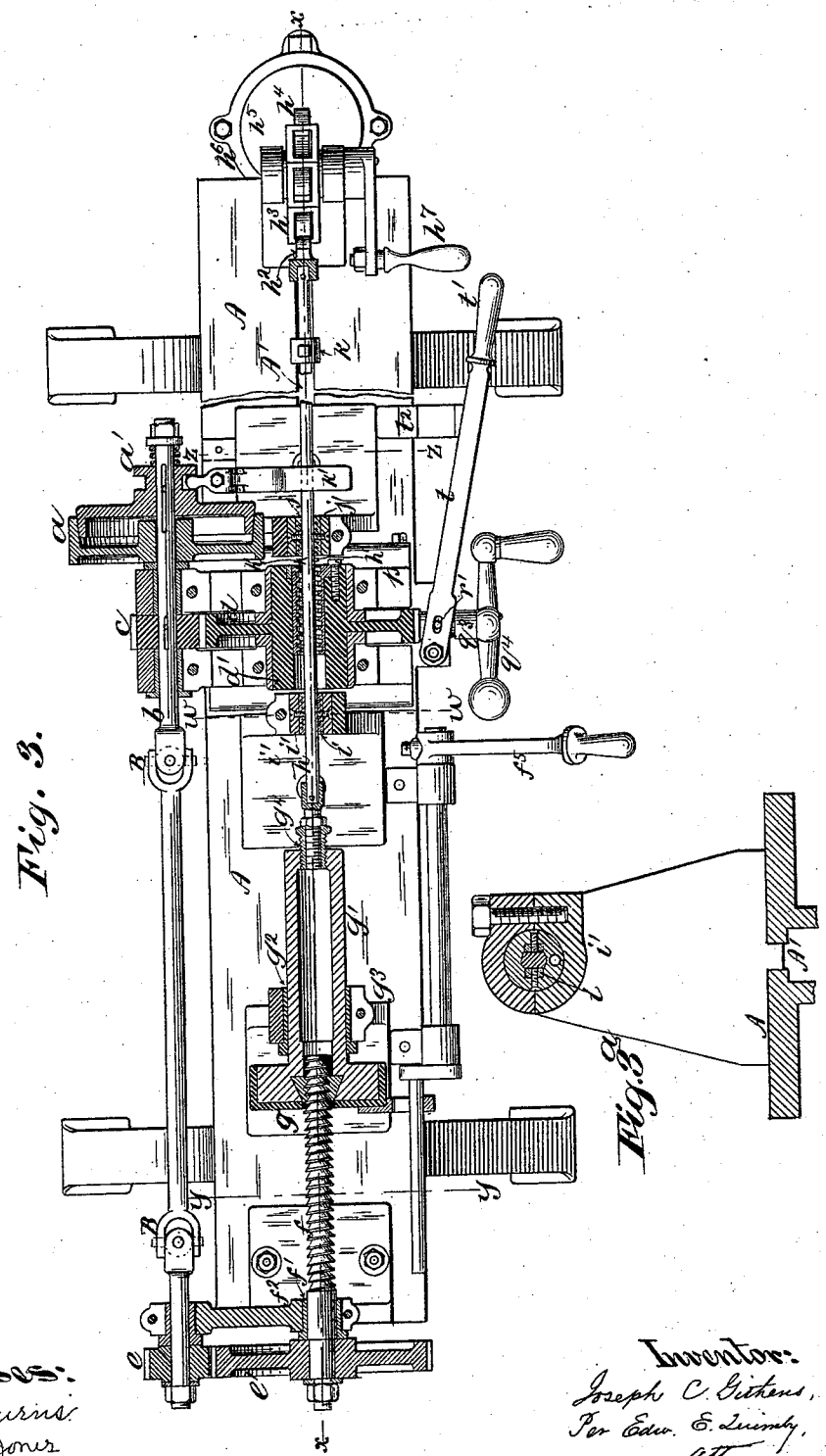

Fig. 3.

Fig. 3a.

Witnesses:
J. E. Burns
A. M. Jones

Inventor:
Joseph C. Githens,
Per Edw. E. Linthicum,
Atty.

THE NORRIS PETERS CO., PHOTO-LITHO., WASHINGTON, D. C.

(No Model.)

5 Sheets—Sheet 4.

J. C. GITHENS.

NUT THREAD CUTTING MACHINE.

No. 456,324. Patented July 21, 1891.

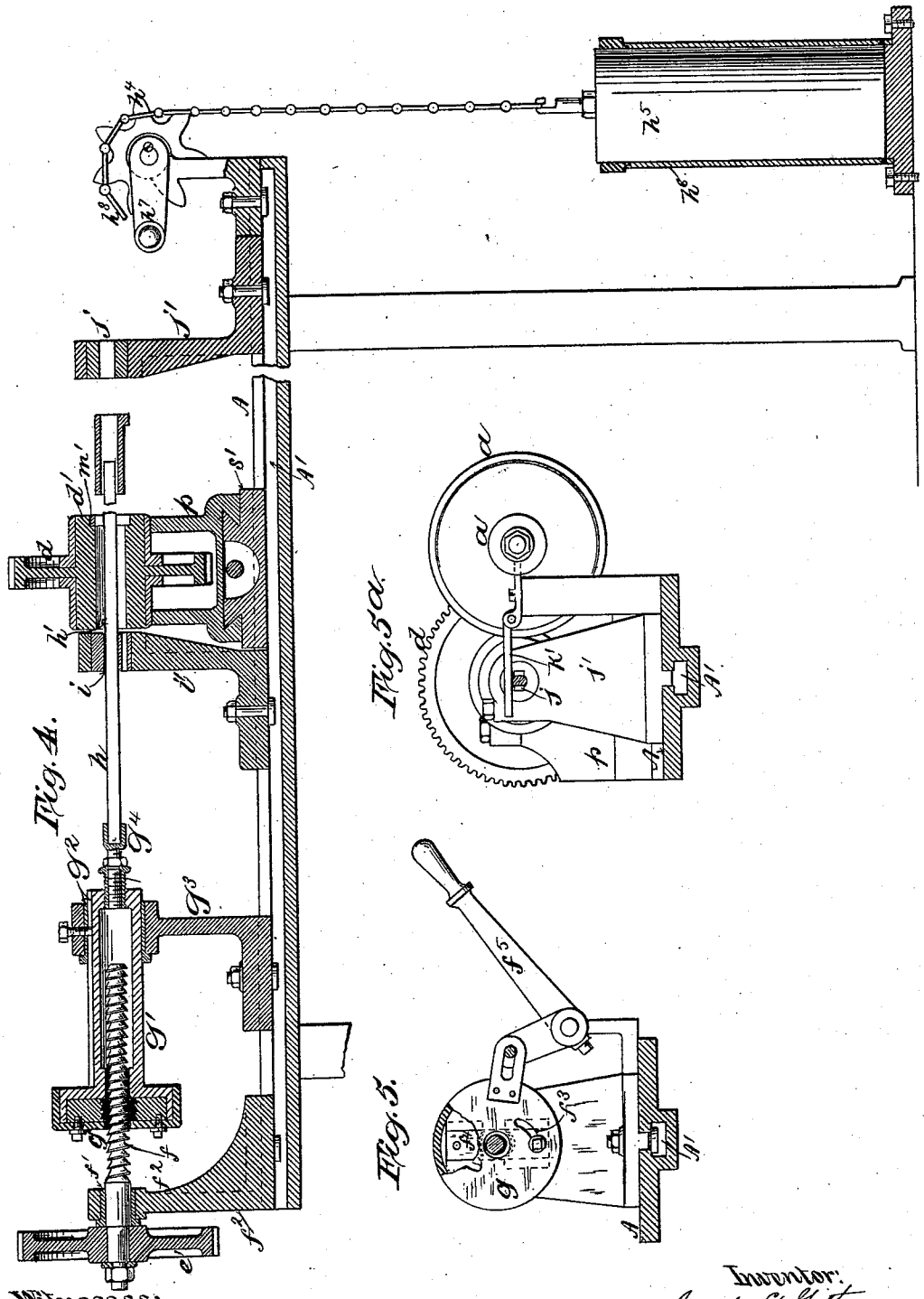

Witnesses:
A. M. Jones.
J. E. Burns

Inventor:
Joseph C. Githens
Per Edw. E. Quimby
Atty

THE NORRIS PETERS CO., PHOTO-LITHO., WASHINGTON, D. C.

(No Model.) 5 Sheets—Sheet 5.

J. C. GITHENS.

NUT THREAD CUTTING MACHINE.

No. 456,324. Patented July 21, 1891.

Fig. 7.

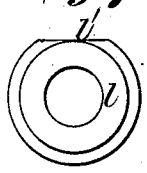

Fig. 6.

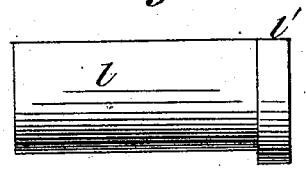

Fig. 8.

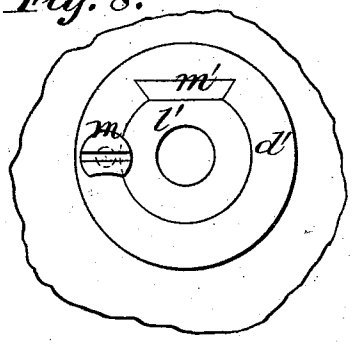

Fig. 9.

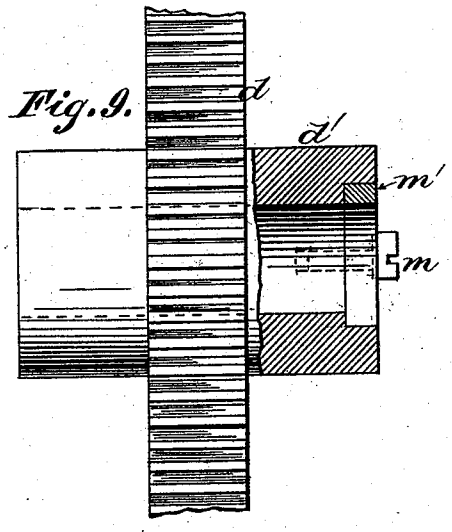

Fig. 10.

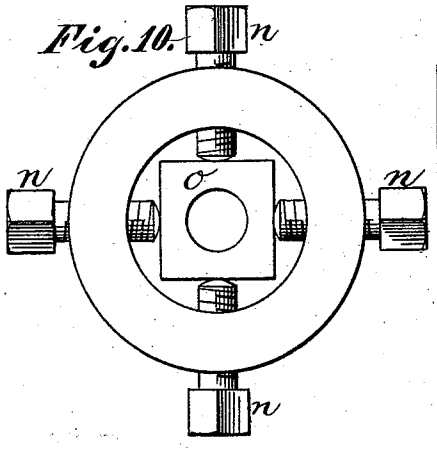

Fig. 11.

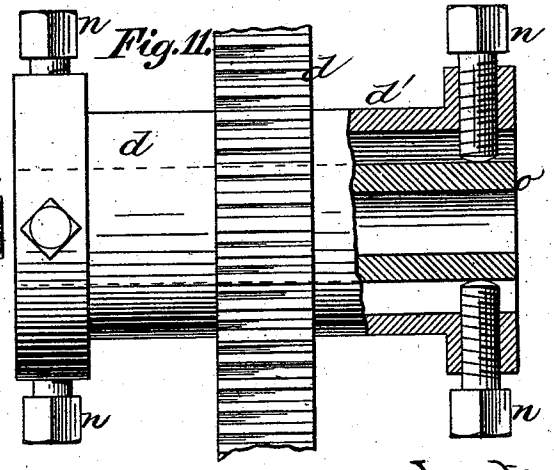

Witnesses:
J. E. Burns.
A. M. Jones.

Inventor:
Joseph C. Githens,
Per Edw. E. Lumby,
Atty.

THE NORRIS PETERS CO., PHOTO-LITHO., WASHINGTON, D. C.

UNITED STATES PATENT OFFICE.

JOSEPH C. GITHENS, OF NEW YORK, N. Y.

NUT-THREAD-CUTTING MACHINE.

SPECIFICATION forming part of Letters Patent No. 456,324, dated July 21, 1891.

Application filed March 14, 1891. Serial No. 385,046. (No model.)

To all whom it may concern:

Be it known that I, JOSEPH C. GITHENS, of the city and State of New York, have invented certain Improvements in Nut-Thread-Cutting Machines, of which the following is a specification.

This invention is especially intended to facilitate the cutting of the threads of the lead-nuts employed in rock-drills and other machines in governing the feeding movements of a drill or other tool.

The invention consists in chucking the nut-blank in the hollow hub of a rotating gear mounted upon a carriage adapted to slide transversely across the bed of the machine for the purpose of permitting the rotating nut-blank to be moved up to a cutter or cutters affixed to a non-rotating cutter-bar extending through the nut-blank and adapted to slide endwise in boxes arranged on either side of and in close proximity to the hollow hub in which the nut-blank is chucked. By means of a lead-screw engaging a parting nut with which one end of the cutter-bar is connected the proper endwise movement is given to the cutter-bar during the cutting operation. At the conclusion of each cut the chuck-carriage is moved back to clear the nut-blank from the tool, and the parting-nut is disengaged from the lead-screw, so that a weight suspended from a chain led over a sprocket-wheel and connected with the adjacent end of the cutter-bar will rapidly return the cutter-bar to its normal position preparatory to making another cut. One of the boxes in which the cutter-bar slides is mounted upon a standard adapted to slide in a longitudinal direction upon the bed-plate of the machine. To extricate the finished nut from the chuck, the chain is unhooked from the cutter-bar after the completion of the last cut, the hook is detached from the end of the cutter-bar, the longitudinally-sliding standard is moved away from the end of the chuck, and the nut, having previously been released from the devices which have held it in the chuck, is then slipped off the end of the cutter-bar, so that another nut-blank can be slipped onto the end of the cutter-bar and fastened in the chuck. The longitudinally-sliding standard is then returned to its position in proximity to the chuck, the hook is attached to the end of the cutter-bar, the chain hung onto the hook, and the parting nut is released from the lead-screw, so that the cutter-bar will be pulled back to its starting-position preparatory to the recommencement of the cutting operation. In operation, when each cut has been completed, the operator shifts the belt from a tight to a loose pulley upon the counter-shaft from which the machine is driven and rearranges the cutter-bar for the next cut. For abundant caution, in case the operator neglects to throw the belt off at the proper time, a removable tappet adjustably mounted upon the sliding cutter-bar stops the machine by striking against the shifting-lever of a clutch splined on the driving-shaft, and thereby disengages the said clutch from the driving-pulley.

The accompanying drawings of a thread-cutting machine embodying the improvements are as follows:

Figure 1 is a top view. Fig. 2 is a side elevation. Fig. 2^a is a transverse vertical section taken through the plane indicated by the dotted line $v\ v$ on Fig. 2. Fig. 3 is a longitudinal section taken through the horizontal plane indicated by the dotted line $u\ u$ on Fig. 1. Fig. 3^a is a transverse vertical section taken through the plane indicated by the dotted line $w\ w$ on Fig. 3. Fig. 4 is a longitudinal section taken through the vertical plane indicated by the dotted line $x\ x$ on Fig. 3, but illustraing the cutter-bar in the position which it occupies at the end of a cut, and illustrating the manner in which, after the finished nut has been withdrawn, a nut blank is slipped over the end of the cutter-bar preparatory to being introduced into the rotating chuck. Fig. 5 is a transverse vertical section taken through the plane indicated by the dotted line $y\ y$ on Fig. 3, showing, partly in section and partly in elevation, the parting-nut holder. Fig. 5^a is a transverse vertical section taken through the plane indicated by the dotted lines $z\ z$ on Fig 3, affording a view in elevation of the clutch and clutch-shifter. Figs. 6 and 7 are respectively a side elevation and end view of a flanged cylindrical nut-blank. Fig. 8 is a view of the face of the rotating hub, showing the manner of securing a flanged cylindrical nut-blank therein. Fig. 9 is an elevation,

partly in section, of the rotating hub and the adjoining portion of the gear-wheel connected to or formed integrally with the hub. Figs. 10 and 11 are respectively a face view and a side elevation, partly in section, illustrating a modification adapting the hub for holding a nut-blank which is square in cross-section.

The machine represented in the drawings is composed of a suitably-supported bed-plate A, provided with a longitudinal undercut groove A′, to receive the heads of the screw-bolts for securing to the bed the various movable standards or carriages for supporting the operating parts of the machine.

The power to drive the machine is supplied by a belt on the loose pulley *a*. By means of the spring-operated clutch *a′* the motion of the driving-pulley is transmitted to the prime shaft *b*, to which the clutch is splined. A pinion *c*, splined to the prime shaft, engages and drives the gear *d*, the somewhat elongated hollow hub *d′* of which serves as the rotating chuck for holding the nut-blank. The prime shaft *b* has also affixed to it the pinion *e* for engaging and driving the gear *e′*, affixed to the shank of the lead-screw *f*, journaled in the box *f′* on the standard f^2. The lead-screw is adapted to engage a parting nut, the two halves f^3 f^4 of which are seated in the head *g* on the outer end of the hollow carrier *g′*, adapted to slide in the bearing g^2, formed in the adjustable standard g^3. The inner end of the sliding carrier *g′* is provided with a holder g^4 for holding the adjacent end of the cutter-bar *h*, which is adapted to slide in the bearing *i*, formed in the upper part of the standard *i′*, and extends therefrom through the hollow hub *d′*, and is also adapted to slide in the bearing *j*, formed in the upper part of the adjustable standard *j′*. The cutter-bar *h* is provided with one or more cutting-teeth *h′*, and has at its free end a detachable hook h^2 for engaging one end of the chain h^3, which is led over a sprocket-wheel h^4, and has its opposite end attached to a suitably-heavy plunger h^5, loosely seated in the dash-pot h^6.

By means of a crank h^7, affixed to the shaft of the sprocket-wheel h^4, the weighted plunger h^5 can be lifted to slacken the chain and release it from the hook h^2. By the engagement of the lead-screw *f* with the parting nut the necessary endwise feed is given to the cutter-bar *h* during the cutting operation, at the conclusion of which the two parts of the parting nut are thrown out of engagement with the lead-screw in the usual manner by pulling over the actuating-lever f^5 into the position in which it is represented in Fig. 7, thus permitting the weighted plunger h^5 to pull back the cutter-bar and carrier *g′* into the positions in which they are represented in Fig. 2.

As a matter of precaution the cutter-bar is provided with a detachable collar or tappet *k*, which may be so adjusted upon the cutter-bar that at any prescribed stage during the feeding movement of the cutter-bar it will strike against the shifting-lever *k′* and throw the clutch *a′* out of engagement with the driving-pulley *a*, and thereby stop the machine.

Lead-nuts are frequently made from cylindrical blanks having a flange extending partly around one end, as illustrated in Figs. 6 and 7. For chucking such blanks the hollow hub *d′* is bored to fit the cylinder *l* of the blank, and at one end is counterbored to afford a seat for the flange of the blank. The flange is held in its seat by the screw *m*, inserted in a hole tapped in the end of the hub in suitable position to enable the head of the screw *m* to lap over the edge of the flange. To prevent the blank from turning in its seat, a flat-faced key *m′* is inserted in the end of the hub in position to engage the flat portion *l′* of the nut-flange, as illustrated in Figs. 8 and 9.

To adapt the rotating chuck for holding and centralizing a polygonal nut-blank, the hollow hub *d′* of the gear *d* is elongated, as illustrated in Fig. 11, and provided with radially-arranged set-screws *n*, the inner ends of which bear, respectively, upon the faces of the polygonal nut-blank *o*, as illustrated in Figs. 10 and 11.

In this machine the work is fed up to the cutter. To accomplish this the chuck-gear *d* and the adjacent portion of the prime shaft *b* are mounted in a transversely-sliding carriage *p*, to which the required feeding movement is from time to time given by the usual worm *q* engaging a nut *q′*, suitably fastened to the carriage *p*. The worm *q* is provided with a fixed collar q^2, which bears against the inner end of the adjustable sleeve *r*, the outer end of which bears against the hub q^3 of the crank-arm q^4, by which the worm is operated. The sleeve *r* is seated in the projecting portion *s* of the bed *s′*, on which the carriage *p* slides. The sleeve *r* has affixed to it the vertical pin *r′*, which extends upward through a slotted aperture in the sway-bar *t*, provided at one end with the handle *t′*, and having its opposite end pivoted to the projecting portion *s* of the bed *s′*. By means of the sway-bar *t* motion can be imparted to the sleeve *r*, and hence to the worm *q* and the carriage *p*. At the conclusion of each cut the sway-bar is pulled outward to withdraw the nut-blank from the path of the cutter while the cutter-bar is being pulled back to its normal position. The sway-bar is then pushed inward and drops into a notch t^2, which serves to hold the sway-bar, and hence the carriage *p*, in the position to which it has thus been moved. A further movement is given to the carriage *p* to the extent equal to the depth of the next cut by turning the worm *q*. Although the required range of transverse movement of the carriage *p* is comparatively small, it is preferable to provide the prime shaft with the knuckle-joints B B, instead of relying merely upon the

spring of the shaft to enable it to accommodate itself to the lateral movement of its bearing in the carriage *p*.

What is claimed as the invention is—

1. In a nut-thread-cutting machine, the combination, as herein described, of a rotating gear provided with a hollow hub for serving as a chuck for a nut-blank and mounted in a carriage adapted to be fed transversely across the bed of said machine, a cutter-bar provided with a cutter or cutters and extending through said hub and sliding endwise in boxes respectively on opposite sides of said hub, a lead-screw for imparting endwise-feeding movement to said cutter-bar, and a standard supporting one of said boxes and adapted to be moved longitudinally along the bed of said machine a sufficient distance to disengage said box from the free end of said cutter-bar, as and for the purposes set forth.

2. The combination, as herein described, of a rotating chuck mounted in a transversely-sliding carriage, an endwise-sliding cutter-bar extending through said chuck and connected at one end to a sliding carrier containing a parting nut, a lead-screw for engaging said parting nut and imparting a prescribed speed of endwise-feeding movement to said cutter-bar, and a weight suitably connected with the opposite end of said cutter-bar for rapidly pulling said cutter-bar back to its normal position when said parting nut has been disengaged from said lead-screw after a cut has been completed and said transversely-sliding carriage has been retracted to afford the necessary clearance for the cutters upon said cutter-bar.

3. The combination, as herein described, of the lead-screw *f*, the parting-nut carrier *g'*, the endwise-moving cutter-bar *h*, and the tappet *k*, fastened upon said cutter-bar with the clutch-shifter *k'*, the clutch *a'*, the driving-pulley *a*, the prime shaft *b*, and gearing for transmitting from the said prime shaft power to rotate said lead-screw, for the purpose of disengaging said clutch from said driving-pulley at a prescribed stage in the feeding movement of said cutter-bar.

JOSEPH C. GITHENS.

Witnesses:
A. M. JONES,
J. E. BURNS.