(19) Europäisches Patentamt
European Patent Office
Office européen des brevets

(11) EP 3 287 851 A1

(12) EUROPEAN PATENT APPLICATION

(43) Date of publication:
28.02.2018 Bulletin 2018/09

(51) Int Cl.:
G03G 21/16 (2006.01)

(21) Application number: **16185118.3**

(22) Date of filing: **22.08.2016**

(84) Designated Contracting States:
AL AT BE BG CH CY CZ DE DK EE ES FI FR GB GR HR HU IE IS IT LI LT LU LV MC MK MT NL NO PL PT RO RS SE SI SK SM TR
Designated Extension States:
BA ME
Designated Validation States:
MA MD

(60) Divisional application:
17171455.3 / 3 287 854

(71) Applicant: **Brother Kogyo Kabushiki Kaisha**
Nagoya-shi, Aichi-ken 467-8561 (JP)

(72) Inventor: **ITABASHI, Nao**
Nagoya-shi, Aichi, 467-8562 (JP)

(74) Representative: **Kuhnen & Wacker**
Patent- und Rechtsanwaltsbüro
Prinz-Ludwig-Straße 40A
85354 Freising (DE)

Remarks:
Amended claims in accordance with Rule 137(2) EPC.

(54) DEVELOPING CARTRIDGE AND IMAGE FORMING APPARATUS INCLUDING THE SAME

(57) A developing cartridge (1) comprising: a casing (10) accommodating developer therein; a developing roller (30) rotatable about an axis extending in a first direction and positioned at one side of the casing (10) in a second direction; a storage medium (61) having an electric contact surface (611); and a holder (62) movable relative to the casing (10) in the second direction with the electric contact surface (611) between a first position and a second position, the holder (62) having an outer surface (620) at which the electric contact surface (611) is positioned.

Fig.4

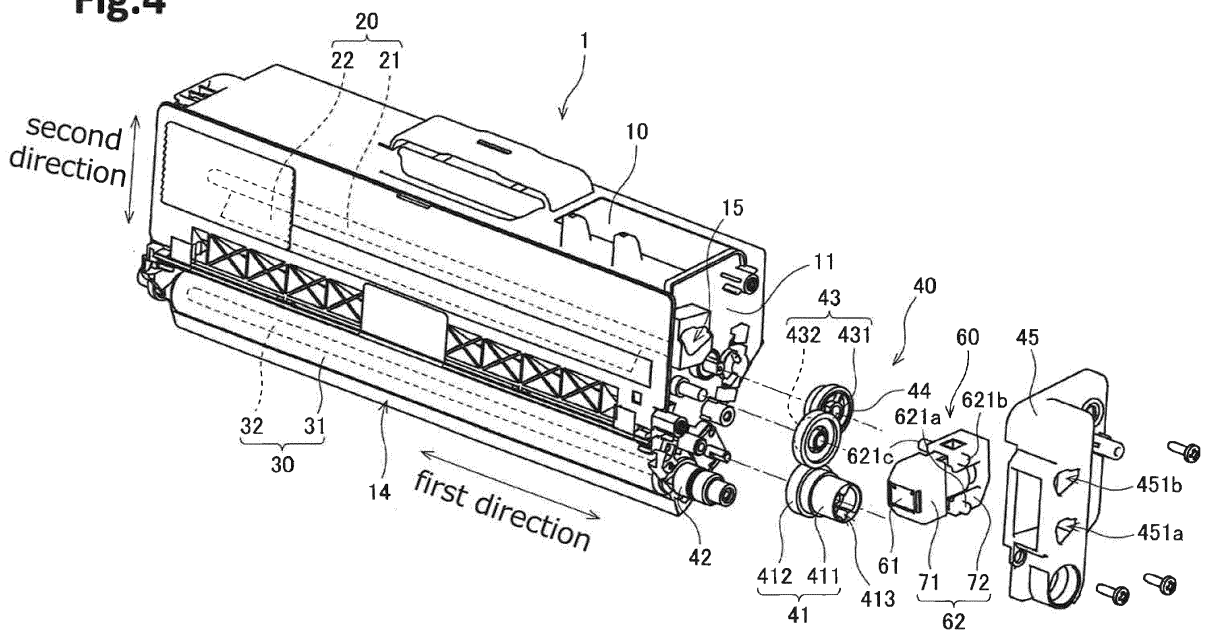

EP 3 287 851 A1

Description

[Field of the Invention]

[0001] The present invention relates to a developing cartridge.

[Description of Related Art]

[0002] An electro-photographic type image forming apparatus such as a laser printer and an LED printer is known. A developing cartridge is used in the image forming apparatus. The developing cartridge includes a developing roller for supplying toner. Patent publication 1 discloses a developing cartridge which is capable of being attached to a drawer unit. The drawer unit is positioned in an interior of the image forming apparatus and can be pulled out from the inside of the image forming apparatus to the outside of the image forming apparatus. The drawer unit includes a photosensitive drum. The photosensitive drum faces the developing roller when the developing cartridge is attached to the drawer unit.

[0003] The developing cartridge is temporarily moved away from the photosensitive drum to have a separate state after the developing cartridge is attached to the drawer unit and the drawer unit is positioned in the interior of the image forming apparatus. For example, in a color printer, each developing roller of a cyan toner developing cartridge, a magenta toner cartridge and a yellow toner cartridge other than a black toner cartridge is moved away from the corresponding photosensitive drum when the image forming apparatus executes a monochromatic printing. In this case, for example, a position of a casing of each of the cyan toner developing cartridge, the magenta toner developing cartridge and the yellow toner developing cartridge may be changed relative to the drawer unit.

[0004] Further, Patent publication 2 discloses a developing cartridge capable of being attached to a drum cartridge. The drum cartridge includes a photosensitive drum. The photosensitive drum faces the developing roller when the developing cartridge is attached to the drum cartridge. When the developing cartridge is attached to the drum cartridge, the photosensitive drum faces a developing roller of the developing cartridge. The developing cartridge is attached to the image forming apparatus in a state where the developing cartridge is attached to the drum cartridge.

[0005] The developing cartridge is temporarily moved away from the photosensitive drum to have a separate state after the developing cartridge is attached to the image forming apparatus. For example, in a color printer, each developing roller of a cyan toner developing cartridge, a magenta toner cartridge and a yellow toner cartridge other than a black toner cartridge are moved away from the each corresponding photosensitive drum when the image forming apparatus executes a monochromatic printing. In this case, for example, a position of a casing of each of the cyan toner developing cartridge, the magenta toner developing cartridge and the yellow toner developing cartridge may be changed relative to the drum cartridges.

[Prior art document]

[Patent publication]

[0006]

[Patent publication 1] Japanese Patent Application Publication No.2011-59510
[Patent publication 2] Japanese Patent Application Publication No.2013-54058

[Summary of the invention]

[0007] Further, a developing cartridge including a storage medium is also known. An IC (Integrated Circuit) chip is an example of the storage medium. The storage medium has an electric contact surface. The electric contact surface is in contact with an electric connector of the image forming apparatus or the drawer unit in a state where the developing cartridge is attached to the image forming apparatus or drawer unit.

[0008] However, a position of the electric contact surface relative to the electric connector of the image forming apparatus may be changed in accordance with the movement of the casing relative to the drum cartridge or the drawer unit for changing the separate state. Accordingly, friction may occur between the electric contact surface and the electric connector whenever the developing cartridge is changed to the separate state.

[0009] It is an object of the present invention to reduce friction between the electric contact surface of the developing cartridge and the electric connector of the image forming apparatus.

[0010] The object is attained by a developing cartridge according to claim 1. According to the invention a developing cartridge comprises: a casing for accommodating developer therein; a developing roller rotatable about an axis extending in a first direction and positioned at one side of the casing in a second direction; a storage medium having an electric contact surface; and a holder movable relative to the casing in the second direction between a first position and a second position, the holder having an outer surface at which the electric contact surface is positioned.

[0011] According to the invention, friction at the electric contact surface can be reduced, because the holder is movable with the electric contact surface relative to the casing in the second direction.

[0012] Further developments of the invention are specified in the dependent claims.

[0013] In a first preferred embodiment as defined in claim 2 the outer surface is positioned at a side of the holder in a third direction crossing the electric contact

surface, and the outer surface is movable relative to the casing in the third direction.

[0014] According to this first preferred embodiment, friction at the electric contact surface can be reduced, because the holder is movable with the electric contact surface relative to the casing in the second direction, and the outer surface is movable in the third direction.

[0015] In a second preferred embodiment as defined in claim 3, the holder includes a first end portion in the third direction including the outer surface, and a second end portion separated from the first end portion in the third direction, the first end portion being movable relative to the second end portion in the third direction.

[0016] In this second preferred embodiment, friction at the electric contact surface can further be reduced, because the first end portion including the outer surface is movable relative to the second end portion in the third direction.

[0017] In a third preferred embodiment as defined in claim 4, the holder includes an elastic member positioned between the first end portion and the second end portion, the elastic member being configured to be stretched or compressed in the third direction between a first state and a second state, wherein a length in the third direction of the elastic member in the first state is greater than a length in the third direction of the elastic member in the second state.

[0018] In this third preferred embodiment a length in the third direction between the first end portion and the second end portion is changeable. Thus, friction at the electric contact surface can further be reduced.

[0019] In a fourth preferred embodiment as defined in claim 5, the holder is movable relative to the casing in the second direction between the first position and the second position in a state where the elastic member is in the second state.

[0020] In this fourth preferred embodiment the holder is movable with the electric contact surface relative to the casing in the second direction even at the second state of the elastic member. Therefore, friction at the electric contact surface can be reduced.

[0021] In a fifth preferred embodiment as defined in claim 6, the elastic member is configured to be changed from the first state to the second state when the developing cartridge is attached to an image forming apparatus, and the electric contact surface is configured to be in contact with an electric connector of the image forming apparatus in a state where the elastic member is in the second state.

[0022] In this fifth preferred embodiment the elastic member is changed from the first state to the second state when the developing cartridge is attached to the image forming apparatus, and the electric contact surface is in contact with the electric connector of the image forming apparatus in a state where the elastic member is in the second state. Therefore, friction at the electric contact surface can be further reduced.

[0023] In a sixth preferred embodiment as defined in claim 7 a length in the third direction of the elastic member in the second state is smaller than a natural length in the third direction of the elastic member.

[0024] In this sixth preferred embodiment the electric contact surface can receive a repulsion force from the elastic member when the elastic member is in the second state.

[0025] In the above preferred embodiments the elastic member may be a spring.

[0026] Preferably, the spring is a coil spring.

[0027] In a seventh preferred embodiment as defined in claim 8, the holder has a remote state in which between the first end portion and the second end portion in the third direction is a first distance and a proximity state in which between the first end portion and the second end portion in the third direction is a second distance which is smaller than the first distance. The holder is urged in a direction such that the first end portion and the second end portion is moved away from each other in a state where the holder is in the proximity position.

[0028] In this seventh preferred embodiment the holder is urged in the direction such that the first end portion and the second end portion is moved away from each other in a state where the holder is in the proximity position. Therefore, friction at the electric contact surface can be reduced, and the first end portion can be urged in the direction away from the second end portion.

[0029] In an eighth preferred embodiment as defined in claim 9, the holder is changed from the remote state to the proximity state when the developing cartridge is attached to the image forming apparatus, and the electric contact surface is in contact with the electric connector of the image forming apparatus when the holder is in the proximity state. Further, the holder is movable relative to the casing between the first position and the second position in the second direction even when the holder is in the proximity state. Therefore, friction at the electric contact surface can be reduced.

[0030] In a ninth preferred embodiment as defined in claim 10 the holder is an elastic member being configured to be stretched or compressed in the third direction.

[0031] In a tenth preferred embodiment as defined in claim 11 the holder is positioned at a side of the casing in the first direction.

[0032] In an eleventh preferred embodiment as defined in claim 12 the developing cartridge further comprises a holder cover positioned at the side of the casing in the first direction, and covering at least a portion of the holder, the holder cover has one of a first recessed portion and a first through-hole, and the holder includes a first boss extending in the first direction and inserted through the one of the first recessed portion and the first through-hole, the first boss being movable in the second direction relative to the one of the first recessed portion and the first through-hole when the holder moves relative to the casing in the second direction between the first position and the second position.

[0033] With this configuration, the holder is movable

with the electric contact surface in the second direction relative to the casing.

[0034] In a twelfth preferred embodiment as defined in claim 13 the one of the first recessed portion and the first through-hole has a dimension in the second direction greater than a dimension of the first boss in the second direction.

[0035] Preferably, according to a thirteenth preferred embodiment based on the eleventh or twelfth preferred embodiment, the casing has one of a second recessed portion and a second through-hole at the side of the casing in the first direction. The holder includes a second boss extending in the first direction and positioned opposite to the first boss relative to the holder, the second boss being inserted through the one of the second recessed portion and the second through-hole, the second boss being movable in the second direction relative to the one of the second recessed portion and the second through-hole when the holder moves relative to the casing in the second direction between the first position and the second position.

[0036] Preferably, according to a fourteenth preferred embodiment based on the thirteenth preferred embodiment the one of the second recessed portion and the second through-hole has a dimension in the second direction greater than a dimension of the second boss in the second direction.

[0037] Preferably, according to a fifteenth preferred embodiment based on any one of the eleventh to fourteenth preferred embodiment, the holder is movable relative to the casing in the third direction between a third position and a fourth position, and the first boss is movable in the third direction relative to the one of the first recessed portion and the first through-hole when the holder moves relative to the casing in the third direction between the third position and the fourth position.

[0038] Preferably, according to a sixteenth preferred embodiment based on the fourteenth or fifteenth preferred embodiment, the holder is movable relative to the casing in the third direction between the third position and the fourth position, the first boss is movable in the third direction relative to the one of the first recessed portion and the first through-hole when the holder moves relative to the casing in the third direction between the third position and the fourth position, and the second boss is movable in the third direction relative to the one of the second recessed portion and the second through-hole when the holder moves relative to the casing in the third direction between the third position and the fourth position.

[0039] Preferably, according to a seventeenth preferred embodiment based on the sixteenth preferred embodiment, the one of the second recessed portion and the second through-hole has a dimension in the third direction greater than a dimension of the second boss in the third direction.

[0040] Preferably, according to an eighteenth preferred embodiment based on any one of the fifteenth to seventeenth preferred embodiment, the one of the first recessed portion and the first through-hole has a dimension in the third direction greater than a dimension of the first boss in the third direction.

[0041] Preferably, according to a nineteenth preferred embodiment based on the tenth preferred embodiment, the casing further includes a holder cover positioned at the side of the casing in the first direction and covering at least a portion of the holder, and a boss extending in the first direction and positioned between the side of the casing and the holder cover, and the holder has one of a recessed portion and a through-hole through which the boss is inserted, the boss being movable in the second direction relative to the one of the recessed portion and the through-hole when the holder moves relative to the casing in the second direction between the first position and the second position.

[0042] Preferably, according to a twentieth preferred embodiment based on the nineteenth preferred embodiment, one of the recessed portion and the through-hole has a length in the second direction greater than a length of the boss in the second direction.

[0043] Preferably, according to a twenty-first preferred embodiment based on the nineteenth or twentieth preferred embodiment, the holder is movable relative to the casing in the third direction between a third position and a fourth position, and the boss is movable in the third direction relative to the one of the recessed portion and the through-hole when the holder moves in the third direction between the third position and the fourth position.

[0044] Preferably, according to a twenty-second preferred embodiment based on the twenty-first preferred embodiment, the one of the recessed portion and the through-hole has a dimension in the third direction greater than a dimension of the boss in the third direction.

[0045] Preferably, according to a twenty-third preferred embodiment based on any one of the nineteenth to twenty-second preferred embodiment, the holder cover includes the boss.

[0046] Preferably, according to a twenty-fourth preferred embodiment based on any one of the nineteenth to twenty-second preferred embodiment, the side of the casing includes the boss.

[0047] Preferably, according to a twenty-fifth preferred embodiment based on the invention as defined in claim 1 or based on the first preferred embodiment, the developing cartridge further comprise an elastic member extending in the third direction between the casing and the holder, the elastic member including a first end portion in the third direction and a second end portion opposite to the first end portion in the third direction, the first end portion being connected to the holder, and the second end portion in the third direction being connected to the casing, the first end portion of the elastic member being movable relative to the second end portion of the elastic member in the second direction.

[0048] Preferably, according to a twenty-sixth preferred embodiment based on the invention as defined in

claim 1 or based on the first preferred embodiment, the developing cartridge further comprises an arm extending in the third direction between the casing and the holder, the arm including a first end portion in the third direction and a second end portion opposite to the first end portion in the third direction, the first end portion being rotatably connected to the casing, and the second end portion in the third direction being rotatably connected to the holder, the second end portion of the arm being movable relative to the first end portion of the arm in the second direction.

[0049] With this configuration, the holder is movable with the electric contact surface in the second direction relative to the casing.

[0050] Preferably, according to a twenty-seventh preferred embodiment based on the invention as defined in claim 1 or based on the first preferred embodiment, the developing cartridge further comprises a lever movable relative to the casing, the holder being movable in the third direction in accordance with movement of the lever.

[0051] With such configuration, the holder is movable with the electric contact surface in the third direction relative to the casing.

[0052] In the above discussed invention and preferred embodiments, the holder may be movable with the storage medium. Throughout the description, if a first element is described to be movable with a second element, then this means that there is a fixed relative position and a fixed orientation between the first and second element.

[0053] In the above discussed invention and preferred embodiments, the outer surface of the holder may hold the electric contact surface.

[0054] In the above discussed invention and preferred embodiments, the storage medium may be positioned at the outer surface of the holder.

[0055] In the above discussed invention and preferred embodiments, the outer surface of the holder may hold the storage medium.

[0056] In the above discussed invention and preferred embodiments, the outer surface may be positioned at a side of the holder in the third direction crossing the electric contact surface.

[0057] In the above discussed invention and preferred embodiments, the developing roller may be positioned at one side of the casing relative to a center of the casing in the second direction.

[0058] In the above discussed invention and preferred embodiments, the second direction may cross the first direction.

[0059] In the above discussed invention and preferred embodiments, the electric contact surface is further movable in a third direction crossing the electric contact surface.

[0060] In the above discussed invention and preferred embodiments, the second direction may be perpendicular to the first direction. [0061] The object of the invention is also attained by an image forming apparatus according to claim 14. Therein, any developing cartridge according to the above discussed preferred embodiments may be used as long as the developing cartridge has all features of the fourth preferred embodiment.

[0061] Herein, if a preferred embodiment is described to be based on another preferred embodiment then the preferred embodiment includes all features of this other preferred embodiment.

[Brief description of the drawings]

[0062]

Fig. 1 is a perspective view of a developing cartridge;
Fig. 2 is a perspective view of the developing cartridge;
Fig. 3 is a perspective view of the developing cartridge;
Fig. 4 is a perspective view of the developing cartridge;
Fig. 5 is a perspective view of the developing cartridge;
Fig. 6 is an exploded perspective view of an IC (Integrated Circuit) chip assembly;
Fig. 7 is a cross-sectional view of the IC chip assembly;
Fig. 8 is a view for description of an attachment of the developing cartridge;
Fig. 9 is a view for description of the attachment of the developing cartridge;
Fig. 10 is a view for description of the attachment of the developing cartridge;
Fig. 11 is a view for description of the attachment of the developing cartridge;
Fig. 12 is a view for description of the attachment of the developing cartridge;
Fig. 13 is a view for description of the attachment of the developing cartridge;
Fig. 14 is a view for description of the attachment of the developing cartridge;
Fig. 15 is a view for description of a separating operation;
Fig. 16 is a partial exploded perspective view of a developing cartridge according to a first modification;
Fig. 17 is a cross-sectional view of an IC (Integrated Circuit) chip assembly according to the first modification;
Fig. 18 is a partial perspective view of a developing cartridge according to a second modification;
Fig. 19 is a view for description of operation of a columnar like elastic member and an IC chip assembly according to the second modification;
Fig. 20 is a view for description of operation of the columnar like elastic member and the IC chip assembly according to the second modification;
Fig. 21 is a view for description of an assembly of a developing cartridge according to the second modification;
Fig. 22 is a view for description of the assembly of the developing cartridge according to the second

modification;

Fig. 23 is a view for description of a separating operation in the developing cartridge according to the second modification;

Fig. 24 is a perspective view of a developing cartridge according to a third modification;

Fig. 25 is a view of the developing cartridge according to the third modification as viewed from one side thereof in a first direction;

Fig. 26 is a view of the developing cartridge according to the third modification as viewed from the one side thereof in the first direction;

Fig. 27 is a view of the developing cartridge according to the third modification as viewed from the one side thereof in the first direction;

Fig. 28 is an exploded perspective view of a first cover and an IC (Integrated Circuit) chip assembly according to a fourth modification;

Fig. 29 is a cross-sectional view of the first cover and the IC chip assembly according to the fourth modification;

Fig. 30 is a perspective view of the IC chip assembly according to the fourth modification;

Fig. 31 is a partial perspective view of a developing cartridge according to a fifth modification;

Fig. 32 is an exploded perspective view of the first cover and the IC chip assembly according to the fifth modification;

Fig. 33 is a perspective view of a developing cartridge and a drum cartridge according to a sixth modification;

Fig. 34 is a view for description of attachment of the drum cartridge to an image forming apparatus according to the sixth modification; and

Fig. 35 is an exploded perspective view of the IC chip assembly and components ambient thereto according to the sixth modification.

Fig. 36 is a cross-sectional view of the first cover, the IC chip assembly and an elastic member according to the fourth modification.

Fig. 37 is a cross-sectional view of the first cover, the IC chip assembly and an elastic member according to the fourth modification.

[Embodiment]

[0063] A preferred embodiment of the present invention will be described with reference to drawings.

[0064] In the following embodiment, an extending direction of a rotation axis of a developing roller will be referred to as "first direction", and a moving direction of a casing in a separating operation will be referred to as "second direction". The second direction crosses the first direction. Preferably, the second direction is perpendicular to the first direction.

1. Overall Structure of Developing Cartridge

[0065] Figs. 1 to 5 are perspective views of a developing cartridge 1. The developing cartridge 1 is used for an electro-photographic type image forming apparatus (for example, a laser printer or a LED printer), and is a unit for supplying developer (toner, for example) to a photosensitive drum. As shown in Fig. 1, the developing cartridge 1 is attached to a drawer unit 90 of the image forming apparatus. When the developing cartridge 1 is replaced, the drawer unit 90 is drawn out from a front surface of the image forming apparatus. The drawer unit 90 includes four cartridge holding portions 91, and the developing cartridge 1 is attached to four cartridge holding portions 91, respectively. Each of four cartridge holding portions 91 includes a photosensitive drum.

[0066] In the present embodiment, four developing cartridges 1 are attached to one drawer unit 90. Each of the four developing cartridges 1 is configured to accommodate developer therein, and the color of the developer is different colors (cyan, magenta, yellow, and black, for example) among the four developing cartridges respectively. However, the number of the developing cartridges 1 that can be attached to the drawer unit 90 may be 1 to 3 or be greater than or equal to 5.

[0067] As shown in Figs. 2 to 5, each developing cartridge 1 according to the present embodiment includes a casing 10, an agitator 20, a developing roller 30, a first gear portion 40, a second gear portion 50, and an IC (Integrated Circuit) chip assembly 60.

[0068] The developing roller 30 is a roller rotatable about a rotation axis extending in the first direction. The developing roller 30 according to the present embodiment includes a roller body 31 and a roller shaft 32. The roller body 31 is a cylinder-shaped member extending in the first direction. The roller body 31 is made of an elastic rubber, for example. The roller shaft 32 is a cylindrical member penetrating through the roller body 31 in the first direction. The roller shaft 32 is made of metal or conductive resin.

[0069] The roller shaft 32 may not penetrate through the roller body 31 in the first direction. For example, each of a pair of roller shafts 32 may extend from each end of the roller body 31 in the first direction.

[0070] The agitator 20 includes an agitator shaft 21 and an agitation blade 22. The agitator shaft 21 extends along the rotation axis extending in the first direction. The agitation blade 22 expands outward from the agitator shaft 21 in a radial direction. The agitation blade 22 is positioned inside a developing chamber 13 of the casing 10. A first agitator gear 44 and a second agitator gear 51 described later are mounted to both end portions in the first direction of the agitator shaft 21, respectively. Accordingly, the agitator shaft 21 and the agitation blade 22 are rotatable with the first agitator gear 44 and the second agitator gear 51. The developer which is accommodated in the developing chamber 13 is agitated by rotation of the agitation blade 22. Instead of the agitation

blade 22, the agitator may include an agitation film.

[0071] The casing 10 is a case configured to accommodate therein developer (toner, for example) for an electro-photographic printing. The casing 10 includes a first outer surface 11 and a second outer surface 12. The first outer surface 11 and the second outer surface 12 are separated from each other in the first direction. The first gear portion 40 and the IC chip assembly 60 are positioned at the first outer surface 11. The second gear portion 50 is positioned at the second outer surface 12. The casing 10 extends in the first direction from the first outer surface 11 to the second outer surface 12. The developing chamber 13 for accommodating the developer is provided in the casing 10.

[0072] The casing 10 has an opening 14. The opening 14 communicates between the developing chamber 13 and an exterior of the developing chamber 13. The opening 14 is positioned at one end portion in the second direction of the casing 10. The developing roller 30 is positioned at the opening 14. That is, the developing roller 30 is positioned closer to one side of the casing 10 than to the center of the casing 10 in the second direction. The roller body 31 is fixed to the roller shaft 32 so as to be incapable of rotating relative to the roller shaft 32. One end portion of the roller shaft 32 in the first direction is mounted to a developing gear 42 described later so as to be incapable of rotating relative to the developing gear 42. When the developing gear 42 rotates, the roller shaft 32 rotates with the developing gear 42 and then the roller body 31 rotates together with the roller shaft 32.

[0073] When the developing cartridge 1 receives a driving force, the developer is supplied from the developing chamber 13 in the casing 10 onto an outer peripheral surface of the developing roller 30 via a supply roller (omitted in the figure). At this time, the developer is tribocharged between the supply roller and the developing roller 30. On the other hand, bias voltage is applied to the roller shaft 32 of the developing roller 30. Accordingly, static electricity between the roller shaft 32 and the developer moves the developer toward the outer peripheral surface of the roller body 31.

[0074] The developing cartridge 1 further includes a layer thickness regulation blade which is omitted in the figure. The layer thickness regulation blade regulates a thin layer of the developer supplied onto the outer peripheral surface of the roller body 31 so that the thickness of the developer becomes constant. Then, the developer on the outer peripheral surface of the roller body 31 is supplied to the photosensitive drum of the drawer unit 90. At this time, the developer moves from the roller body 31 to the photosensitive drum on the basis of an electrostatic latent image formed on the outer peripheral surface of the photosensitive drum. Accordingly, the electrostatic latent image is visualized on the outer peripheral surface of the photosensitive drum.

[0075] The first gear portion 40 is positioned at one end portion in the first direction of the casing 10. That is, the first gear portion 40 is positioned at the first outer surface 11. Fig. 4 is a perspective view of the developing cartridge 1 in a state in which the first gear portion 40 is disassembled. As shown in Fig. 4, the first gear portion 40 includes a coupling 41, a developing gear 42, an idle gear 43, a first agitator gear 44, and a first cover 45. A plurality of gear teeth of each gear are not illustrated in Fig. 4.

[0076] The coupling 41 is a gear for initially receiving the driving force applied from the image forming apparatus. The coupling 41 is rotatable about a rotation axis extending in the first direction. The coupling 41 includes a coupling portion 411 and a coupling gear 412. The coupling portion 411 and the coupling gear 412 are integral with each other and made of a resin, for example. The coupling portion 411 has a coupling hole 413 recessed in the first direction. The coupling gear 412 includes a plurality of gear teeth. The plurality of gear teeth are provided on an entire of an outer peripheral surface of the coupling gear 412 at equal intervals.

[0077] When the drawer unit 90 to which the developing cartridge 1 is attached is accommodated in the image forming apparatus, a drive shaft of the image forming apparatus is inserted into the coupling hole 413 of the coupling portion 411. With this configuration, the drive shaft and the coupling portion 411 are connected so as to be incapable of rotating relative to each other. Accordingly, the coupling portion 411 rotates when the drive shaft rotates, and the coupling gear 412 rotates together with the coupling portion 411.

[0078] The developing gear 42 is a gear for rotating the developing roller 30. The developing gear 42 is rotatable about a rotation axis extending in the first direction. The developing gear 42 includes a plurality of gear teeth. The plurality of gear teeth are provided on an entire of an outer peripheral surface of the developing gear 42 at equal intervals. At least a portion of the plurality of gear teeth of the coupling gear 412 meshes with at least a portion of the plurality of gear teeth of the developing gear 42. Further, the developing gear 42 is mounted to the end portion of the roller shaft 32 in the first direction so as to be incapable of rotating relative to the roller shaft 32. With this construction, when the coupling gear 412 rotates, the developing gear 42 rotates with the coupling gear 412 and the developing roller 30 also rotates with the developing gear 42.

[0079] The idle gear 43 is a gear for transmitting rotational driving force of the coupling gear 412 to the first agitator gear 44. The idle gear 43 is rotatable about a rotation axis extending in the first direction. The idle gear 43 includes a large diameter gear portion 431 and a small diameter gear portion 432. The large diameter gear portion 431 and the small diameter gear portion 432 are arranged in the first direction. The small diameter gear portion 432 is positioned between the large diameter gear portion 431 and the first outer surface 11 of the casing 10. In other words, the large diameter gear portion 431 is farther away from the first outer surface 11 than the small diameter gear portion 432 is. A diameter of the

small diameter gear portion 432 is smaller than a diameter of the large diameter gear portion 431. In other words, a diameter of an addendum circle of the small diameter gear portion 432 is smaller than a diameter of an addendum circle of the large diameter gear portion 431. The large diameter gear portion 431 and the small diameter gear portion 432 are integral with each other and are made of a resin.

[0080] The large diameter gear portion 431 includes a plurality of gear teeth, and the plurality of gear teeth are provided on an entire of an outer peripheral surface of the large diameter gear portion 431 at equal intervals. The small diameter gear portion 432 includes a plurality of gear teeth, and the plurality of gear teeth are provided on an entire of an outer peripheral surface of the small diameter gear portion 432 at equal intervals. The number of gear teeth of the small diameter gear portion 432 is less than the number of gear teeth of the large diameter gear portion 431. At least a portion of the plurality of gear teeth of the coupling gear 412 meshes with at least a portion of the plurality of gear teeth of the large diameter gear portion 431. Further, at least a portion of the plurality of gear teeth of the small diameter gear portion 432 meshes with at least a portion of the plurality of gear teeth of the first agitator gear 44. When the coupling gear 412 rotates, the large diameter gear portion 431 rotates together with the coupling gear 412 and the small diameter gear portion 432 rotates together with the large diameter gear portion 431. Also, the first agitator gear 44 rotates with the rotation of the small diameter gear portion 432.

[0081] The first agitator gear 44 is a gear for rotating the agitator 20 in the developing chamber 13. The first agitator gear 44 is rotatable about a rotation axis extending in the first direction. The first agitator gear 44 includes a plurality of gear teeth, and the plurality of gear teeth are provided on an entire of an outer peripheral surface of the first agitator gear 44 at equal intervals. As described above, at least a portion of the plurality of gear teeth of the small diameter gear portion 432 meshes with the at least a portion of the plurality of gear teeth of the first agitator gear 44. Further, the first agitator gear 44 is mounted to one end portion of the agitator shaft 21 in the first direction so as to be incapable of rotating relative to the agitator shaft 21. With the configuration, when the rotational driving force is transmitted from the coupling 41 to the first agitator gear 44 via the idle gear 43, the first agitator gear 44 rotates and the agitator 20 rotates together with the first agitator gear 44.

[0082] The first cover 45 is fixed to the first outer surface 11 of the casing 10 by screws, for example. The coupling gear 412, the developing gear 42, the idle gear 43, and the first agitator gear 44 are accommodated in a space between the first outer surface 11 and the first cover 45. The coupling hole 413 of the coupling portion 411 is exposed to an outside of the first cover 45. The first cover 45 according to the present embodiment also serves as a holder cover for holding the holder 62 of the IC chip assembly 60 described later. A structure of the first cover 45 as the holder cover will be described later in detail.

[0083] The second gear portion 50 is positioned at the other end portion of the casing 10 in the first direction. In other words, the second gear portion 50 is positioned at the second outer surface 12. Fig. 5 is a perspective view of the developing cartridge 1 in which the second gear portion 50 is exploded. As illustrated in Fig. 5, the second gear portion 50 includes a second agitator gear 51, a detection gear 52, an electrically conductive member 53, and a second cover 54. Note that, in Fig. 5, gear teeth are not illustrated in the second agitator gear 51 and the detection gear 52.

[0084] The second agitator gear 51 is a gear for transmitting rotational driving force of the agitator shaft 21 to the detection gear 52. The second agitator gear 51 is rotatable about a rotation axis extending in the first direction. The second agitator gear 51 includes a plurality of gear teeth, and the plurality of gear teeth are provided on an entire of an outer peripheral surface of the second agitator gear 51 at equal intervals. At least a portion of the plurality of gear teeth of the second agitator gear 51 meshes with at least a portion of a plurality of gear teeth of the detection gear 52. The second agitator gear 51 is mounted to the another end portion of the agitator shaft 21 in the first direction so as to be incapable of rotating relative to the agitator shaft 21. With this configuration, the second agitator gear 51 rotates with rotation of the agitator shaft 21.

[0085] The detection gear 52 is a gear for providing information on the developing cartridge 1 for the image forming apparatus. The information on the developing cartridge 1 includes, for example, information as to whether the developing cartridge 1 is a new (unused) cartridge or a used cartridge. The information on the developing cartridge 1 also includes, for example, a product specification of the developing cartridge 1. The product specification of the developing cartridge 1 includes, for example, the number of sheets that can be printed with the developer accommodated in the developing cartridge 1 (i.e. sheet-yield number).

[0086] The detection gear 52 is rotatable about a rotation axis extending in the first direction. The detection gear 52 includes a plurality of gear teeth, and the plurality of gear teeth are provide on a portion of an outer peripheral surface of the detection gear 52. When the drawer unit 90 to which an unused developing cartridge 1 is attached is attached in the image forming apparatus, the detection gear 52 can rotate by meshing with the second agitator gear 51. When the detection gear 52 is disengaged from the second agitator gear 51, rotation of the detection gear 52 is stopped.

[0087] When the drawer unit 90 to which a used developing cartridge 1 is attached is attached in the image forming apparatus, the detection gear 52 does not mesh with the second agitator gear 51. Thus, the detection gear 52 cannot rotate.

[0088] A gear may be provided between the second

agitator gear 51 and the detection gear 52. For example, the second gear portion 50 may further include a second idle gear meshing with both the second agitator gear 51 and the detection gear 52. In this case, rotational driving force of the second agitator gear 51 may be transmitted to the detection gear 52 via the second idle gear.

[0089] As illustrated in Fig. 5, the detection gear 52 includes a detecting protrusion 521. The detecting protrusion 521 protrudes in the first direction. The detecting protrusion 521 has a circular arc shape extending along a portion of an addendum circle of the detection gear about the rotation axis of the detection gear 52.

[0090] The electrically conductive member 53 is electrically conductive. The electrically conductive member 53 is formed of a material such as electrically conductive metal or electrically conductive resin. The electrically conductive member 53 is positioned at the second outer surface 12 of the casing 10. The electrically conductive member 53 includes a gear shaft 531 protruding in the first direction. The detection gear 52 rotates about the gear shaft 531 in a state where the detection gear 52 is supported by the gear shaft 531. The electrically conductive member 53 further includes a bearing portion 532. The bearing portion 532 is in contact with the roller shaft 32 of the developing roller 30.

[0091] The drawer unit 90 includes an electrically conductive lever (not illustrated) that is in contact with the gear shaft 531 in a state where the developing cartridge 1 is attached to the drawer unit 90. Instead of the drawer unit 90, the image forming apparatus may include the electrically conductive lever. When the lever contacts the gear shaft 531, electrical connection between the lever and the electrically conductive member 53 is established and electrical connection between the electrically conductive member 53 and the roller shaft 32 is also established. When the image forming apparatus is in operation, electric power is supplied to the roller shaft 32 through the lever, and the roller shaft 32 can keep a prescribed bias voltage. Note that the detecting protrusion 521 covers a portion of an outer peripheral surface of the gear shaft 531. Hence, when the detection gear 52 rotates after a new developing cartridge 1 is attached in the drawer unit 90, the contact state between the lever and the gear shaft 531 changes according to the shape of the detection gear 52. More specifically, the contact state between the lever and the gear shaft 531 changes according to the shape of the detecting protrusion 521 because the detecting protrusion 521 pass through between the lever and the gear shaft according to the rotation of the detection gear 52. Alternatively, the contact state between the lever and the gear shaft 531 changes according to the number of the detecting protrusions 521 which are provided with the detection gear 52 because one or more of detecting protrusions 521 pass through between the lever and the gear shaft according to the rotation of the detection gear 52. The image forming apparatus recognizes the change in the contact state between the lever and the gear shaft 531 to identify whether the attached developing cartridge 1 is new or used and/or the product specification of the mounted developing cartridge 1.

[0092] However, the method for detecting the information on the developing cartridge 1 using the detection gear 52 is not limited to detection of electrical conduction. For example, movement of the lever may be optically detected. Further, the detecting protrusion 521 may be formed to have different circumferential position and length from those in the present embodiment. Further, the detection gear 52 may have a plurality of detecting protrusions 521. The shape of the detection gear 52 may vary according to the product specification of the developing cartridge 1 such as the number of printable sheets. More specifically, the number of the detecting protrusions 521 may be differentiated among a plural type of the developing cartridges, and the product specification regarding each of the developing cartridges may be identified based on the number of the detecting protrusions 21. When each of the plural type of the developing cartridges includes the number of the detecting protrusions 521, circumferential intervals between the plurality of detecting protrusions 521 may be differentiated among the plural type of the developing cartridges. In the above-described case, a circumferential length of each detecting protrusion 521 and/or a radial length of each detecting protrusion 521 may be differentiated based on the product specification regarding each of the developing cartridges. In this way, variations in the number of the detecting protrusions 521 and/or circumferential positions of the each of the detecting protrusions 521 enables the image forming apparatus to identify the product specification regarding each of the developing cartridges.

[0093] The detection gear 52 may be configured of a plurality of components. For example, the detecting protrusion 521 and the detection gear 52 may be different components. Further, the detection gear 52 may include a detection gear body and a supplemental member that shifts its position relative to the detection gear body in accordance with rotation of the detection gear body. In this case, the supplemental member changes between a first position in which the supplemental member is in contact with the lever and a second position in which the supplemental member is not in contact with the lever in accordance with shifting the position of the supplemental member relative to the detection gear body. As a result, the supplemental member may change the position of the lever.

[0094] Further, the detection gear 52 may be configured of a movable gear that can move in the first direction. The movable gear may not be limited to a partially toothless gear. In other words, the movable gear includes a plurality of gear teeth, and the plurality of gear teeth are provided on an outer peripheral surface of the movable gear along the circumference of the movable gear. In this case, the movable gear moves in the first direction in accordance with rotation of the movable gear, thereby the movable gear is disengaged from the second agitator

gear 51. The movable gear may be moved in the first direction away from the second outer surface 12 or toward the second outer surface 12.

[0095] Further, the detection gear 52 may include a cam, and the cam may contact the detecting protrusion 521. In this case, the cam rotates together with rotation of the detection gear 52, and the rotating cam contacts the detecting protrusion 521. This causes the detecting protrusion 521 to move relative to the detection gear 52. The detecting protrusion 521 may be rotatably attached to a shaft provided at the second outer surface 12 or the second cover 54. Alternatively, the detecting protrusion 521 may have a shaft, and the shaft of the detecting protrusion 521 may be inserted into a hole formed in the second outer surface 12 or the second cover 54 so that the detecting protrusion 521 is rotatably supported by the second outer surface 12 or the second cover 54.

[0096] Further, in the present embodiment, the gear shaft 531 extends in the first direction from the second outer surface 12. However, the gear shaft 531 does not need to be in direct contact with the second outer surface 12. For example, the casing 10 may have a through-hole penetrating the second outer surface 12 and a cap fitted with the through-hole, and a gear shift may extend from the cap in the first direction. In this case, the cap includes the gear shift protruding in the first direction toward the detection gear 52, and the detection gear 52 rotates about the gear shaft 531 in a state where the detection gear is supported by the gear shaft 531.

[0097] The second cover 54 is fixed to the second outer surface 12 of the casing 10 by a screw, for example. The second agitator gear 51, the detection gear 52, and the electrically conductive member 53 are accommodated in a space between the second outer surface 12 and the second cover 54. The second cover 54 has an opening 541. A portion of the detection gear 52 and a portion of the gear shaft 531 are exposed to an outside through the opening 541. The electrically conductive lever of the drawer unit 90 contacts the detection gear 52 and the gear shaft 531 through the opening 541.

2. IC Chip assembly

[0098] The IC chip assembly 60 is positioned at the first outer surface 11 of the casing 10. Fig. 6 is an exploded perspective view of the IC chip assembly 60. Fig. 7 is a cross-sectional view of the IC chip assembly 60 taken along a plane perpendicular to the first direction. As shown in Figs. 2 through 7, the IC chip assembly 60 includes an IC (Integrated Circuit) chip 61 as a storage medium and a holder 62 for holding the IC chip 61. The holder 62 is held to the first cover 45 at one end of the casing 10 in the first direction. The IC chip 61 stores various information on the developing cartridge 1. The IC chip 61 includes an electric contact surface 611. The electric contact surface 611 is made of electrically conductive metal. Hereinafter, a direction crossing the electric contact surface 611 (in the present embodiment, a direction perpendicular to the electric contact surface 611) is referred to as a "third direction." The IC chip 61 is fixed to an outer surface of the holder 62 in the third direction.

[0099] The drawer unit 90 includes an electric connector. The electric connector is made of metal, for example. The electric connector of the drawer unit 90 contacts the electric contact surface 611 when the developing cartridge 1 is attached to the drawer unit 90. At this time, the image forming apparatus can perform at least one of reading information from the IC chip 61 and writing information in the IC chip 61.

[0100] At least a portion of the holder 62 is covered by the first cover 45. The holder 62 includes a boss 621 a, a boss 621 b, and a boss 621 c. Each of the boss 621 a and boss 621b extends in the first direction toward the first cover 45 from a surface of the holder 62 opposite to a surface thereof facing the casing 10. The boss 621a and boss 621b are aligned in the second direction. As shown in Figs. 2 and 4, the first cover 45 has a through-hole 451 a and a through-hole 451 b. The through-hole 451 a and through-hole 451 b penetrate the first cover 45 in the first direction, respectively. The through-hole 451 a and through-hole 451 b are aligned in the second direction. The boss 621a is inserted into the through-hole 451a. The boss 621b is inserted into the through-hole 451b.

[0101] The boss 621c extends in the first direction toward the casing 10 from the surface of the holder 62 facing the casing 10. On the other hand, the casing 10 includes a recessed portion 15. The recessed portion 15 is recessed in the first direction on the first outer surface 11 of the casing 10. The boss 621c is inserted into the recessed portion 15. The bosses 621a, 621b and 621c may have a circular columnar shape or a rectangular columnar shape, respectively.

[0102] The through-hole 451a has a dimension (inner dimension) in the second direction larger than a dimension (outside dimension) of the boss 621 a in the second direction. The through-hole 451b has a dimension (inner dimension) in the second direction larger than a dimension (outside dimension) of the boss 621b in the second direction. Further, the recessed portion 15 has a dimension (inner dimension) in the second direction larger than a dimension (outer dimension) of the boss 621c in the second direction. Hence, the holder 62 can move with the bosses 621 a, 621 b and 621c in the second direction relative to the casing 10 and the first cover 45. As the holder 62 moves in the second direction, the IC chip 61 having the electric contact surface 611 also moves in the second direction together with the holder 62.

[0103] The through-hole 451a has a dimension (inner dimension) in the third direction larger than a dimension (outer dimension) of the boss 621 a in the third direction. The through-hole 451b has a dimension (inner dimension) in the third direction larger than a dimension (outer dimension) of the boss 621b in the third direction. Further, the recessed portion 15 has a dimension (inner dimen-

sion) in the third direction larger than a dimension (outer dimension) of the boss 621c in the third direction. Hence, the holder 62 can move with the bosses 621 a, 621 b and 621c in the third direction relative to the casing 10 and the first cover 45. As the holder 62 moves in the third direction, the IC chip 61 having the electric contact surface 611 also moves in the third direction together with the holder 62. The holder 62 may be movable in the first direction between the first cover 45 and the first outer surface 11.

[0104] Alternatively, the holder 62 may include a single boss, or equal to or more than three bosses. Likewise, the first cover 45 may have a single through-hole, or equal to or more than three through-holes. Or, instead of the through-holes 451 a and 451b, the first cover 45 may include one or more of recesses to have the bosses 621 a and/or 621 b inserted thereinto.

[0105] As shown in Figs. 6 and 7, the holder 62 includes a first end portion 710 and a second end portion 720. The first end portion 710 is one end portion of the holder 62 in the third direction. The second end portion 720 is another end portion of the holder 62 in the third direction. The first end portion 710 is movable relative to the second end portion 720 in the third direction. More specifically, the holder 62 of the present embodiment includes a first holder member 71, a second holder member 72, and a coil spring 73 positioned between the first holder member 71 and the second holder member 72. The first holder member 71 is made of resin, for example. The second holder member 72 is made of resin, for example. The first holder member 71 includes the first end portion 710. An outer surface of the first holder member 71 includes a holding surface 620. The IC chip 61 is fixed to the holding surface 620. The second holder member 72 includes the second end portion 720. After assembling the first holder member 71, the second holder member 72 and the coil spring 73 as the holder 62, the first end portion 710 and the second end portion 720 are separated from each other in the third direction.

[0106] The coil spring 73 is an elastic member extending in the third direction. The coil spring 73 is positioned between the first end portion 710 and the second end portion 720 in the third direction. The coil spring 73 can be stretched or compressed in the third direction at least between a first state and a second state more compressed than the first state. The coil spring 73 in the first state has a length in the third direction longer than a length of the coil spring 73 in the second state in the third direction. Therefore, a distance between the first end portion 710 and the second end portion 720 in the third direction in the first state is longer than a distance between the first end portion 710 and the second end portion 720 in the third direction in the second state. At least, the coil spring 73 in the second state has a length in the third direction shorter than a natural length of the coil spring 73.

[0107] As shown in Figs. 6 and 7, the first holder member 71 includes a pawl 714a and a pawl 714b. The pawl 714a and the pawl 714b respectively protrude from the first holder member 71 in a direction crossing the third direction. The second holder member 72 has an opening 721a and an opening 721 b. The pawl 714a is inserted into the opening 721a. The pawl 714b is inserted into the opening 721b. In the first state, the pawl 714a is in contact with the second holder member 72 at a periphery of the opening 721 a on a side of the first end portion 710 in the third direction. Also, in the first state, the pawl 714b is in contact with the second holder member 72 at a periphery of the opening 721b on a side of the first end portion 710 in the third direction. With this structure, the length of the coil spring 73 in the third direction is prevented from getting further longer than the length of the coil spring 73 in the first state. Further, the first holder member 71 cannot be detached from the second holder member 72 easily. On the other hand, in the second state, the pawl 714a is separated from the periphery of the opening 721 a on the side of the first end portion 710 in the third direction, and pawl 714b is separated from the periphery of the opening 721b on the side of the first end portion 710 in the third direction.

[0108] Instead of opening 721 a and the opening 721b, one or more of recesses or one or more of steps which is capable of contacting the pawl 714a and the pawl 714b respectively may be provided. Alternatively, the first holder member 71 may have one or more of openings or one or more of recesses or one or more of steps, whereas the second holder member 72 may include one or more of pawls.

[0109] Due to the difference in dimension between the through-hole 451a and boss 621 a, the difference in dimension between the through-hole 451 b and boss 621 b, and stretch or compression of the coil spring 73 described above, the holding surface 620 of the holder 62 can move in the third direction relative to the casing 10. Hereinafter, the position of the holding surface 620 in the third direction relative to the casing 10 will be referred to as an "initial position". Before attaching the developing cartridge 1 to the drawer unit 90, the holding surface 620 is in the initial position. Further, the position of the holding surface 620 in the third direction relative to the casing 10 at a moment when the coil spring 73 is most compressed during attaching the developing cartridge 1 to the drawer unit 90 will be referred to as an "intermediate position." Further, the position of the holding surface 620 in the third direction relative to the casing 10 when the electric contact surface 611 make contact with an electric connector 913 described later will be referred to as a "contact position." And the position of the holding surface 620 in the third direction relative to the casing 10 after attaching the developing cartridge 1 to the drawer unit 90 has been completed will be referred to as a "final position."

[0110] The outer surface of the first end portion 710 further includes a first surface 711, a second surface 712, and third surfaces 713a and 713b, in addition to the holding surface 620 described above.

[0111] The first surface 711 is positioned at one side of the holding surface 620 in the second direction which

is closer to the developing roller 30 than another side of the holding surface 620 in the second direction. The first surface 711 is inclined relative to the electric contact surface 611 of the IC chip 61 held by the holding surface 620. Specifically, the first surface 711 is inclined at an acute angle relative to the relative to the electric contact surface 611.

[0112] Here, one end of the first end portion 710 in the second direction will be defined as a first outer end position 711 a (third position). One end of the holding surface 620 in the second direction is defined as a first inner end position 711 b (fourth position). As illustrated in Fig. 7, the first surface 711 extends from the first outer end position 711a to the first inner end position 711 b toward the electric contact surface 611. The first outer end position 711 a is farther away from the electric contact surface 611 than the first inner end position 711b both in the second direction and the third direction. In addition, as illustrated in Fig. 7, the distance d1 between the first outer end position 711 a and first inner end position 711 b in the third direction is greater than the distance d2 between the electric contact surface 611 and first inner end position 711b in the third direction.

[0113] The second surface 712 is positioned at one side of the holding surface 620 in the second direction which is farther from the developing roller 30 than another side of the holding surface 620 in the second direction. The second surface 712 is inclined relative to the electric contact surface 611 of the IC chip 61 held by the holding surface 620. Specifically, the second surface 712 is inclined at an acute angle relative to the electric contact surface 611.

[0114] Here, another end of the first end portion 710 in the second direction will be defined as a second outer end position 712a (fifth position). Another end of the holding surface 620 in the second direction is defined as a second inner end position 712b (sixth position). As illustrated in Fig 7, the second surface 712 extends from the second outer end position 712a to the second inner end position 712b toward the electric contact surface 611. The second outer end position 712a is farther away from the electric contact surface 611 than the second inner end position 712b both in the second direction and the third direction. In addition, as illustrated in Fig. 7, the distance d3 between the second outer end position 712a and second inner end position 712b in the third direction is greater than the distance d4 between the electric contact surface 611 and second inner end position 712b in the third direction.

[0115] The third surface 713a is positioned at one side of the electric contact surface 611 in the first direction. The third surface 713 b is positioned at another side of the electric contact surface 611 in the first direction. The third surfaces 713a, 713b extend in the second direction respectively. Each of the third surfaces 713a, 713b is farther away from the coil spring 73 than the electric contact surface 611 in the third direction. Therefore, the electric contact surface 611 is positioned at a recessed area which is recessed toward the coil spring 73 side relative to the third surfaces 713a, 713b.

[0116] Each of the first surface 711, second surface 712, and third surfaces 713a, 713b may be planar or curved. However, it is preferable that each of the first surface 711, second surface 712, and third surfaces 713a, 713b is smooth surface without one or more of steps so that each of the first surface 711, second surface 712, and third surfaces 713a, 713b does not hook a portion of the drawer unit 90 when the developing cartridge 1 is attached to the drawer unit 90.

3. Attaching Operation

[0117] Subsequently, operation when each developing cartridge 1 is attached to the drawer unit 90 will be described. Figs. 8 through 14 respectively illustrate how the developing cartridge 1 is attached to one of the cartridge holding portions 91 of the drawer unit 90.

[0118] When the developing cartridge 1 is attached to the cartridge holding portion 91, as illustrated in Fig. 8, the developing roller 30 of the developing cartridge 1 first faces an insertion opening 910 of the cartridge holding portion 91. At this time, the first end portion 710 of the holder 720 and second end portion 720 of the holder 62 are not in contact with the drawer unit 90. Thus, the coil spring 73 is in the first state described above. The position of the holding surface 620 with respect to the casing 10 in the third direction is the initial position described above. The developing cartridge 1 is inserted into the cartridge holding portion 91 in the second direction, as shown by a dashed arrow illustrated in Fig. 8.

[0119] The cartridge holding portion 91 includes a first guide plate 911 and a second guide plate 912. The first guide plate 911 is spaced apart from the second guide plate 912 in the third direction and the first guide plate 91 and the second guide plate 912 face each other. Each of the first guide plate 911 and second guide plate 912 extends along both the first direction and the second direction. The first guide plate 911 includes an electric connector 913 made of metal. The electric connector 913 is contactable with the electric contact surface 611 of the IC chip 61. The electric connector 913 protrudes from the surface of the first guide plate 911 toward the second guide plate 912 in the third direction.

[0120] When the developing cartridge 1 is inserted into the cartridge holding portion 91, the first surface 711 of the holder 62 contacts the end of the first guide plate 911 in the second direction, as illustrated in Fig. 9. Then, the first guide plate 911 presses the first surface 711, thereby the holder 62 moves in the third direction. At this time, the movement of the holder 62 is relative movement with respect to the casing 10. As a result, the holder 62 is positioned between the first guide plate 911 and the second guide plate 912 in the third direction, as illustrated in Fig. 10.

[0121] The first end portion 710 of the first holder member 71 then contacts the first guide plate 911. The second

end portion 720 of the second holder member 72 also contacts the second guide plate 912. The coil spring 73 is more compressed in the third direction than the first state.

[0122] As illustrated in Fig. 11, the first guide plate 911 includes a guide protrusion 914 protruding toward the second guide plate 912. The guide protrusion 914 is positioned closer to the insertion opening 910 than the electric connector 913. The guide protrusion 914 includes a first inclined surface 915. The second guide plate 912 also includes a second inclined surface 916. The distance between the first inclined surface 915 and second inclined surface 916 in the third direction becomes gradually smaller toward the inserting direction of the developing cartridge 1.

[0123] When the developing cartridge 1 is further inserted in the second direction, the first holder member 71 contacts the first inclined surface 915 and the second holder member 72 contacts the second inclined surface 916. As a result, the first holder member 71 and second holder member 72 become closer to each other in the third direction and the length of the coil spring 73 in the third direction becomes shorter gradually. When each of the third surfaces 713a, 713b of the first holder member 71 contacts the top portion of the guide protrusion 914, the length of the coil spring 73 in the third direction becomes shortest. That is, a length of the coil spring 73 in the third direction becomes a shortest state, and a length of the coil spring 73 in the shortest state is shorter than a length of the coil spring 73 in the second state described above. The position of the holding surface 620 relative to the casing 10 in the third direction is the intermediate position described above.

[0124] As described above, the IC chip assembly 60 can change the position of the holding surface 620 in the third direction when the developing cartridge 1 is inserted into the drawer unit 90. As a result, the developing cartridge 1 can be inserted into the drawer unit 90 by changing the position of the holding surface 620 in the third direction along the guide protrusion 914. Therefore, the developing cartridge 1 can be inserted into the drawer unit 90 with suppressing friction of the electric contact surface 611 of the IC chip 61. In addition, as illustrated Figs. 10, 11, and 12, the electric contact surface 611 directly contacts the electric connector 913 after the first surface 711 moves over the guide protrusion 914. As a result, friction of the electric connector 913 can be reduced.

[0125] In particular, in the developing cartridge 1 according to the present embodiment, the electric contact surface 611 of the IC chip 61 is positioned at a recessed area which is recessed relative to the third surfaces 713a, 713b. As a result, the top portion of the guide protrusion 914 contacts only the third surfaces 713a, 713b but does not contact the electric contact surface 611 in the state illustrated in Fig. 11. Therefore, friction of the guide protrusion 914 against the electric contact surface 611 can be prevented.

[0126] When the developing cartridge 1 is further inserted into the second direction, the third surfaces 713a, 713b pass the guide protrusion 914. The second surface 712 then contacts the guide protrusion 914 as illustrated in Fig. 12. With such contact, the coil spring 73 stretches again from the shortest state to the second state described above. As a result, the electric contact surface 611 of the IC chip 61 contacts the electric connector 913 as illustrated in Fig. 13. The length in the third direction of the coil spring 73 in the second state is shorter than the length of the coil spring 73 in the first state and the length in the third direction of the coil spring 73 in the second state is longer than the length of the coil spring 73 in the shortest state. In addition, the length in the third direction of the coil spring 73 in the second state is shorter than the natural length of the coil spring 73. The relative position of the holding surface 620 with respect to the casing 10 in the third direction corresponds to the contact position described above.

[0127] Consequently, the IC chip assembly 60 is fixed in a state where the IC chip assembly 60 is nipped between the electric connector 913 and second guide plate 912. In the present embodiment, the casing 10 is then inclined in the third direction as shown by a dashed arrow illustrated in Fig. 14. As a result, the developing roller 30 contacts the photosensitive drum 92 in the drawer unit 90. At this time, the position of the holding surface 620 relative to the casing 10 in the third direction changes from the contact position to the final position described above. The boss 621 a moves inside of the through-hole 451 a in the third direction and the boss 621 b moves inside of the through-hole 451 b in the third direction. As a result, the boss 621 a is not in contact with the edge of the through-hole 451a of the first cover 45, and the boss 621b is not in contact with the edge of the through-hole 451b of the first cover 45. Thus, the IC chip assembly 60 and first cover 45 are not in contact with each other. Accordingly, oscillation of the drive unit such as the first gear portion 40 and the like is difficult to be transmitted to the IC chip assembly 60 when the image forming apparatus executes the print process. Therefore, the contact state of the electric contact surface 611 and electric connector 913 can be sufficiently maintained.

4. Separating operation

[0128] After the developing cartridge 1 is attached to the drawer unit 90, the drawer unit 90 can perform a "separating operation" in which the developing roller 30 is temporarily separated from the photosensitive drum 92. As illustrated in Fig. 2, the first cover 45 of the developing cartridge 1 includes a first columnar protrusion 46 extending in the first direction. As illustrated in Fig. 3, the second cover 54 of the developing cartridge 1 includes a second columnar protrusion 55 extending in the first direction. As illustrated in Fig. 1, the drawer unit 90 includes a pressure member 93. The pressure member 93 is positioned at one side portion of the cartridge holding

portion 91 in the first direction, and another pressure member (not shown in the Fig. 1) is positioned at another side portion of the cartridge holding portion 91 in the first direction. The another pressure member has same structures of the pressure member 93 and same functions of the pressure member 93. Each of four cartridge holding portions 91 includes the pressure member 93 and the another pressure member.

[0129] In the motion indicated by the dashed arrow in Fig. 14, the pressure member 93 presses the first columnar protrusion 46 and the another pressure member 93 presses the second columnar protrusion 55 in the same manner as the pressure member 93 presses the first columnar protrusion 46 as shown in Fig. 14, and the casing 10 is thus inclined in the third direction. Accordingly, the position of the holding surface 620 in the third direction relative to the casing 10 is changed from the contact position to the final position, described above.

[0130] Fig. 15 illustrates the developing cartridge 1 in the separating operation. During the separating operation, the driving force from the image forming apparatus changes the positions of the first columnar protrusion 46 and the second columnar protrusion 55. Specifically, the lever of the drawer unit 90 (not illustrated) presses each of the first columnar protrusion 46 and the second columnar protrusion 55, and each of the first columnar protrusion 46 and the second columnar protrusion 55 thus moves against the pressing force of the pressure member 93. Consequently, as shown by a dashed arrow illustrated in Fig. 15, the casing 10 and the developing roller 30 of the developing cartridge 1 move in the second direction so as to separate away from the photosensitive drum 92.

[0131] Meanwhile, the IC chip assembly 60 is fixed in a state where the IC chip assembly 60 is nipped between the electric connector 913 and the second guide plate 912. Accordingly, the position of the IC chip assembly 60 is not changed relative to the drawer unit 90, when the casing 10 and the developing roller 30 move in the second direction so that the developing roller 30 is separated from the photosensitive drum 92. Further, the state of the coil spring 73 does not change from the second state. As a result, the position of the holder 62 relative to the casing 10 in the second direction changes from a standard position (first position) to a separation position (second position). The boss 621a then moves inside of the through-hole 451a in the second direction and the boss 621b then moves inside of the through-hole 451b in the second direction.

[0132] As described above, the developing cartridge 1 can change the position of the casing 10 relative to the drawer unit 90 in the second direction, without changing the position of the electric contact surface 611 in the second direction relative to the drawer unit 90. Accordingly, the developing cartridge 1 can maintain the contacting state between the electric contact surface 611 and the electric connector 913 during the separating operation. The contacting state between the electric contact surface 611 and the electric connector 913 can also be maintained during the shipment of the image forming apparatus in which the developing cartridge 1 is attached to the drawer unit 90. Accordingly, abrasion or wear of the electric contact surface 611 can be suppressed.

5. Modifications

[0133] While the description has been made in detail with reference to specific embodiment thereof, it would be apparent to those skilled in the art that various changes and modifications may be made therein without departing from the spirit and scope of the above described embodiment. In the following description, differences between the above embodiment and the modifications are mainly explained.

[0134] 5-1. First Modification

[0135] In the following a first modification of the main embodiment is discussed. Due to the many similarities between the first modification and the main embodiment only differences between the main embodiment and the first modification will be discussed. With regard to all other features it is referred to the discussion of the main embodiment above.

[0136] Fig. 16 is a partial exploded perspective view of the developing cartridge 1A according to a first modification. In the first modification, at least a portion of the holder 62A holding the IC chip 61A is covered by the first cover 45A, as illustrated in Fig. 16. As illustrated in Fig. 16, the first cover 45A includes a boss 451aA and a boss 451bA. The boss 451aA and the boss 451bA are arrayed in the second direction. Each of the boss 451aA and the boss 451bA extends from the first cover 45A toward the casing 10A in the first direction. The holder 62A has a through-hole 621A that penetrates the holder 62A in the first direction. Both of the boss 451aA and the boss 451 bA are inserted in the through-hole 621 A.

[0137] The boss 451aA includes one edge of the boss 451aA and another edge of the boss 451aA in the second direction, and the boss 451bA includes one edge of the boss 451bA facing the another edge of the boss 451aA in the second direction and another edge of the boss 451bA in the second direction. The through-hole 621A has a dimension in the second direction greater than the distance between the one edge of the boss 451aA and the another edge of the boss 451bA in the second direction. Specifically, the distance between the one edge of the boss 451aA and the another edge of the boss 451bA in the second direction is the longest distance of the boss 451aA and the boss 451bA in the second direction, and the dimension of the through-hole 621A in the second direction is greater than the longest distance. The holder 62A can move together with the through-hole 621A in the second direction relative to both the casing 10A and the first cover 45A. When the holder 62A moves in the second direction, the IC chip 61A having the electric contact surface 611A moves in the second direction together with the holder 62A.

[0138] The dimension of the through-hole 621A in the third direction is greater than each dimension of the boss 451aA and the boss 451bA in the third direction. Accordingly, the holder 62A, can move together with the through-hole 621A in the third direction relative to both the casing 10A and the first cover 45A. When the holder 62A moves in the third direction, the IC chip 61A having the electric contact surface 611A moves in the third direction together with the holder 62A. The holder 62A may be movable in the first direction between the first cover 45A and the first outer surface 11 A.

[0139] As described above, the first cover 45A may include the boss 451aA and boss 451bA, and the holder 62A may have the through-hole 621A, so that the electric contact surface 611 can move relative to the casing 10A in the second and third directions. In accordance with the configuration, the boss 451aA and the boss 451bA can be moved in the third direction inside of the through-hole 621A when the casing 10A is inclined in the third direction during the attachment of the developing cartridge 1A to the drawer unit 90. When the separating operation is performed after the developing cartridge 1A is attached to the drawer unit 90, the boss 451aA and the boss 451bA can move in the second direction inside of the through-hole 621 A. As a result, the position of the casing 10A can be changed in a state where the contact state of the electric contact surface 611A and the electric connecter is satisfactorily maintained.

[0140] Instead of the 451aA and the boss 451bA, the number of the bosses may be one or more than or equal to three. The number of the through-holes 621A formed on the holder 62A may be more than or equal to two. Instead of the through-hole 621A, the holder 62A may have a recessed portion in which the boss 451aA and the boss 451bA can be inserted. Further, the first outer surface of the casing may have a boss and the holder has the through-hole or the recessed portion through which the boss of the casing is inserted. Each of the boss 451aA and the boss 451bA may have either a cylindrical shape or a prism shape.

[0141] Fig. 17 is a cross-sectional view of the IC chip assembly 60A indicated in Fig. 16 taken along a plane orthogonal to the first direction. As illustrated in Fig. 17, the holder 62A of the IC chip assembly 60A includes a holder member 74A made of resin and a leaf spring 75A fixed to the holder member 74A. The holder member 74A includes a first end portion 740A that is positioned at one end portion of the holder 62A in the third direction. The IC chip 61A is fixed to the holding surface 620A that is portion of the outer surface of the first end portion 740A. The leaf spring 75A includes a second end portion 750A that is positioned at the another end portion of the holder 62A in the third direction. The first end portion 740A and the second end portion 750A are separated from each other in the third direction in the assembled holder 62A.

[0142] The leaf spring 75A is made of a bent elastic metal plate, for example. The leaf spring 75A can be stretched or compressed in the third direction between a first state, and a second state in which the leaf spring 75A is bent more than in the first state. The length in the third direction of the leaf spring 75A in the first state is larger than the length in the third direction of the leaf spring 75A in the second state. That is, the distance in the third direction between the first end portion 740A and the second end portion 750A in the first state is longer than the distance in the third direction between the first end portion 740A and the second end portion 750A in the second state. The length in the third direction of the leaf spring 75A in the second state is smaller than the natural length of the leaf spring 75A.

[0143] As described above, instead of the coil spring, the leaf spring 75A may be used so that the IC chip assembly 60A can be stretched or compressed in the third direction. Further, as described above, the dimensional difference between the boss 451aA and the through-hole 621A, the dimensional difference between the boss 451bA and the through-hole 621A and stretch or compression of the leaf spring 75A enable the electric contact surface 611A to move in the third direction relative to the casing 10A, when the developing cartridge 1A is being attached to the drawer unit 90.

5-2. Second Modification

[0144] In the following a second modification of the main embodiment is discussed. Due to the many similarities between the second modification and the main embodiment only differences between the main embodiment and the second modification will be discussed. With regard to all other features it is referred to the discussion of the main embodiment above.

[0145] Fig. 18 is a partial perspective view illustrating a developing cartridge 1B according to a second modification. In the second modification depicted in Fig. 18, the electric contact surface 611B of an IC chip 61B is oriented to face in the first direction. Accordingly, in the second modification, the third direction orthogonal to the electric contact surface 611 B is the same direction as the first direction. In the second modification depicted in Fig. 18, a columnar elastic body 63B is positioned between a casing 10B and an IC chip assembly 60B. As the columnar elastic body 63B, for example, a coil spring extending in the third direction may be used. The columnar elastic body 63B includes one end portion in the first direction, and the one end portion is fixed to a holder 62B of the IC chip assembly 60B. The columnar elastic body 63B includes another end portion in the first direction, and the another end portion is fixed to a first outer surface of the casing 10B. That is, the casing 10B and the IC chip assembly 60B are connected to each other by the columnar elastic body 63B.

[0146] Figs. 19 and 20 are explanatory diagrams illustrating movement of the IC chip assembly 60B in accordance with deformation of the columnar elastic body 63B. As illustrated in Fig. 19, the columnar elastic body 63B is capable of being stretched or compressed in the third

direction. As the columnar elastic body 63B is stretched or compressed, the position of the electric contact surface 611 B relative to the casing 10B in the third direction also changes. Further, as illustrated in Fig. 20, the columnar elastic body 63B can deform in a direction diagonal to the third direction. As the columnar elastic body 63B diagonally deforms, the position of the one end of the columnar elastic body 63B also changes relative to another end of the columnar elastic body 63B in a direction perpendicular to the third direction.

[0147] Figs. 21 and 22 are explanatory diagrams illustrating how the developing cartridge 1B according to the second modification is attached to a drawer unit 90B. As illustrated in Figs. 21 and 22, a first cover 45B includes a first frame portion 456B and a second frame portion 457B, and the first frame portion 456B and the second frame portion 457B are arranged with a gap between the first frame portion 456B and the second frame portion 457B in the second direction. The IC chip assembly 60B and the columnar elastic body 63B are accommodated in an accommodating portion 452B which defines a space between the first frame portion 456B and the second frame portion 457B. The first cover 45B further includes a pawl 453B protruding from the first frame portion 456B toward the accommodating portion 452B. As illustrated in Fig. 21, before the developing cartridge 1B is attached to the drawer unit 90B, a portion of the IC chip assembly 60 is in contact with the pawl 453B. Hence, the columnar elastic body 63B is maintained in a more compressed state than the natural length of the columnar elastic body 63B in the third direction.

[0148] When the developing cartridge 1B has been attached to the drawer unit 90B, as illustrated in Fig. 22, the electric contact surface 611B of the IC chip 61B contacts an electric connector 913B. In this state, a length of the columnar elastic body 63B in the third direction is shorter than that the length in the third direction of the columnar elastic body 63B in the compressed state illustrated in Fig. 21. Thus, due to a repulsion force of the columnar elastic body 63B, a contact state between the electric contact surface 611B and the electric connector 913B is maintained.

[0149] Fig. 23 is an explanatory diagram illustrating a state where the separating operation is performed after the developing cartridge 1B is attached to the drawer unit 90B. When the separating operation is performed, as illustrated in Fig. 23, the columnar elastic body 63B is deformed diagonally with respect to the third direction. Thus, the IC chip assembly 60B connected to the one end of the columnar elastic body 63B moves in the second direction relative to the casing 10B connected to the another end of the columnar elastic body 63B. Thus, the position of the casing 10B in the second direction can be changed without changing the position of the electric contact surface 611B in the second direction relative to the drawer unit 90B. That is, the separating operation can be performed in a state where the contact state between the electric contact surface 611B and the electric connector 913B is maintained.

5-3. Third Modification

[0150] In the following a third modification of the main embodiment is discussed. Due to the many similarities between the third modification and the main embodiment only differences between the main embodiment and the third modification will be discussed. With regard to all other features it is referred to the discussion of the main embodiment above.

[0151] Fig. 24 is a perspective view of a developing cartridge 1C according to a third modification. In the third modification depicted in Fig. 24, an IC chip assembly 60C includes an IC chip 61C, a holder 62C, a shaft portion 66C, and a lever 67C. The shaft portion 66C extends in the second direction within a first cover 45C. The shaft portion 66C includes one end portion in the second direction, and the one end portion of the shaft portion 66C is mounted to the holder 62C so as to be incapable of rotating relative to the holder 62C. The shaft portion 66C includes another end portion in the second direction, and the another end portion is mounted to the lever 67C positioned outside the first cover 45C so as to be incapable of rotating relative to the lever 67C. Accordingly, as the lever 67C pivots about the shaft portion 66C as indicated by a dashed line arrow depicted in Fig. 24, the shaft portion 66C and the holder 62C also pivots about the shaft portion 66C. In the third modification, the third direction orthogonal to the electric contact surface 611C of the IC chip 61C is the same direction as the first direction. Accordingly, a position of the holder 62C in the third direction is changed.

[0152] Figs. 25 through 27 are views of the developing cartridge 1C according to the third modification as viewed in the first direction. Before the developing cartridge 1C is attached to the drawer unit, as illustrated in Figs 24 and 25, the IC chip 61C and the holder 62C are accommodated inside the first cover 45C. When the developing cartridge 1C is attached to the drawer unit and then the drawer unit is accommodated in the image forming apparatus, the lever 67C pivots about the shaft portion 66C. As a result, a portion of the holder 62C and the IC chip 61C protrude from the first cover 45C. Further, as illustrated in Fig. 27, the electric contact surface 611C of the IC chip 61C are in contact with an electric connector 913C of the drawer unit.

[0153] The lever 67C may be manually operated by a user after the developing cartridge 1C is attached to the drawer unit. Alternatively, the lever 67C may pivot by a guide surface provided at a main body of the image forming apparatus when the drawer unit is attached into the main body of the image forming apparatus.

[0154] The first cover 45C includes a support surface 454C that can contact the lever 67C before the lever 67C pivots. In a state depicted in Fig. 25, one surface of the lever 67C in the second direction is in contact with the support surface 454C. Accordingly, the lever 67C, the

shaft portion 66C, the holder 62C and the IC chip 61C as a whole are supported by the first cover 45C in the second direction. However, as illustrated in Fig. 26, as the lever 67C pivots, the lever 67C moves outside the support surface 454C. Accordingly, the one surface of the lever 67C in the second direction and the support surface 454C are not in contact with each other. Further, the holder 62C is held at a position depicted in Fig. 26, by a positioning member of the drawer unit. As a result, a state in which the electric contact surface 611C of the IC chip 61C and the electric connector 913C are in contact with each other is maintained.

[0155] Further, in the state depicted in Fig. 26, the one surface of the holder 62C in the second direction is not in contact with the first cover 45C. Accordingly, the lever 67C, the shaft portion 66C, the holder 62C and the IC chip 61C as a whole can move relative to the first cover 45C in the second direction. Consequently, as illustrated in Fig. 27, when the separating operation is performed, the casing 10C and the first cover 45C can move in the second direction in a state where the contact state between the electric contact surface 611C of the IC chip 61C and the electric connector 913C is maintained.

5-4. Fourth Modification

[0156] In the following a fourth modification of the main embodiment is discussed. Due to the many similarities between the fourth modification and the main embodiment only differences between the main embodiment and the fourth modification will be discussed. With regard to all other features it is referred to the discussion of the main embodiment above.

[0157] Fig. 28 is an exploded perspective view illustrating a first cover 45D and an IC chip assembly 60D of the developing cartridge according to a fourth modification. Fig. 29 is a cross-sectional view illustrating the first cover 45D and the IC chip assembly 60D. In the fourth modification depicted in Figs 28 and 29, the electric contact surface 611D of the IC chip 61D are oriented to face in the first direction. Accordingly, the third direction orthogonal to the electric contact surfaces 611 D is the same direction as the first direction.

[0158] As illustrated in Fig. 28 and 29, the IC chip assembly 60D according to the fourth modification includes the IC chip 61D, the holder 62D holding the IC chip 61D, and a joint member 63D. The holder 62D includes a plurality of pawls 622D, and each of the plurality of pawls 622D extends away from the electric contact surfaces 611 D in the third direction. In the fourth modification depicted in Fig. 28, the holder 62D includes four pawls 622D. The joint member 63D includes a fixing portion 631D fixed to the first cover 45D, and an arm 632D extending from the fixing portion 631D toward the holder 62D in the third direction.

[0159] The arm 632D includes a distal end in the third direction, and a spherical portion 633D whose diameter is larger than a thickness of the arm 632D. The spherical portion 633D is positioned at the distal end of the arm 632D. The spherical portion 633D is held at a position inside of the holder 62D by the plurality of pawls 622D. With this configuration, as illustrated in Fig. 30, the arm 632D and the holder 62D are connected to each other so as to be rotatable relative to each other. That is, the IC chip 61D and the holder 62D are rotatable relative to each other about the spherical portion 633D. Accordingly, the position of the electric contact surfaces 611 D of the IC chip 61D relative to the fixing portion 631D can be moved in the second direction. Therefore, when the separating operation of the developing cartridge is performed, the casing and the first cover 45D can move in the second direction in a state where the contact state between the electric contact surfaces 611 D of the IC chip 61 D and the electric connector is maintained.

[0160] Further, with the configuration depicted in Figs. 28 through 30, the plurality of pawls 622D of the holder 62D and the arm 632D of the joint member 63D are movable relative to each other in the third direction. Thus, when the developing cartridge is inserted into the drawer unit, the IC chip 61D and the holder 62D can move relative to the fixing portion 631D in the third direction. Accordingly, the developing cartridge can be inserted, while the electric contact surfaces 611D of the IC chip 61D can be suppressed from being rubbed.

[0161] As shown in Fig. 36, an elastic member such as a coil spring 66D1 being stretched or compressed in the third direction may be positioned between the fixing portion 631D of the joint member 63D and the plurality pawls 622D. Specifically the coil spring 66D1 being stretched or compressed in the third direction may be positioned between the first cover 45D and the plurality pawls 622D. The coil spring 66D1 shown in Fig. 36 extends through the circular opening in the first cover 45D, through which the arm 632D is extending. Accordingly, a repulsion force by the coil spring 66D1 allows the electric contact surface 611D to reliably contact to the electric connector. As shown in Fig. 37, an elastic member such as a coil spring 66D2 being stretched or compressed in the third direction may not be positioned between the first cover 45D and the plurality pawls 622D. One end of the coil spring 66D2 contacts the fixing portion 631D, on the other hand, another end of the coil spring 662D contacts the first outer surface 11.

[0162] Further, the arm 632D may be rotatably connected to the fixing portion 631D or the first cover 45D. For example, the arm 632D includes one spherical portion at one end of the arm 632D and another spherical portion at another end of the arm 632D. Either the one spherical portion or the another spherical portion may be rotatably held by a plurality of pawls of the first cover 45D. In this manner, when both ends of the arm 632D are rotatably connected, the position of the electric contact surface 611D in the second direction may be changed more flexibly.

5-5. Fifth Modification

[0163] In the following a fifth modification of the main embodiment is discussed. Due to the many similarities between the fifth modification and the main embodiment only differences between the main embodiment and the fifth modification will be discussed. With regard to all other features it is referred to the discussion of the main embodiment above.

[0164] Fig. 31 is a partial perspective view of a developing cartridge 1E of the fifth modification. In the embodiment shown in Fig. 31, the holder 62E holding the IC chip 61E has a plate shape which has been deformed in a circular manner and whose ends are connected to each other. The holder 62E is made of a flexible resin, for example. Accordingly, in the embodiment shown in Fig. 31, the holder 62E itself is an elastic member which is stretched or compressed in the third direction. With this structure, a distance between both ends of the holder 62E in the third direction is changeable. Accordingly, when the developing cartridge 1E is inserted into the drawer unit, abrasion or wear of the electric contact surface 611E of the IC chip 61E can be suppressed.

[0165] In the embodiment shown in Fig. 31, the holder 62E is not necessary to be configured by a plurality of members due to stretch or compression of the holder 62E in the third direction. The holder 62E is not necessary to be comprised by an elastic member which is different from the member for holding the IC chip 61E.

[0166] Fig. 32 is an exploded perspective view showing a first cover 45E and an IC chip assembly 60E of the fifth modification. As shown in Fig. 32, the first cover 45E includes a boss 451aE extending in the first direction and a boss 451bE extending in the first direction. The boss 451aE and the boss 451bE are aligned in the second direction. And, the first cover 45E includes a connecting portion 455E which connects a top of the boss 451aE and a top of the boss 451bE to each other.

[0167] The holder 62E extends in a ring shape surrounding the boss 451 aE and the boss 451bE. And one pawl 623E positioned at one end of the holder 62E and another pawl 623E positioned at another end of the holder 62E are engaged with each other. Accordingly, a through-hole 621E is positioned at the inside of the holder 62E and the through-hole 621E penetrates through the holder 62E in the first direction. The boss 451aE and the boss 451bE are positioned inside of the through-hole 621E. The holder 62E further includes a plate portion 624E protruding from an inner surface of the holder 62E toward the through-hole 621E. The plate portion 624E is inserted between the boss 451aE and the boss 451bE.

[0168] The distance between the boss 451aE and the boss 451bE in the second direction is greater than the thickness of the plate portion 624E in the second direction. Therefore, the holder 62E is able to relatively move together with the plate portion 624E with respect to the casing 10E and the first cover 45E in the second direction. When the holder 62E moves in the second direction, the IC chip 61 E having the electric contact surface 611 E moves together with the holder 62E in the second direction.

[0169] The size of the through-hole 621E in the third direction is greater than the sizes of each of the boss 451aE and the boss 451bE in the third direction. Therefore, the holder 62E is movable with respect to the casing 10E and the first cover 45E in the third direction. When the holder 62E moves in the third direction, the IC chip 61E having the electric contact surface 611E moves together with the holder 62E in the third direction.

[0170] When the developing cartridge 1E is attached to the drawer unit, the holder 62E is nipped by the guide plates of the drawer unit and the holder 62E is compressed in the third direction. Specifically, by approaching both of the one pawl 623E and the another pawl 623E to each other, an urging force exerting in the direction to separate the both of the one pawl 623E and the another pawl 623E from each other is generated. The electric contact surface 611E of the IC chip 61E is in contact with the electric connector in a state where the holder 62E is elastically deformed. The electric contact surface 611E is fixed to the electric connector due to the urging force in a state where the electric contact surface 611E is in contact with the electric connector. And, in the separating operation, the casing 10E moves in the second direction in a state where the contact between the electric contact surface 611 E and the electric connector is maintained.

[0171] With the above configuration, when the developing cartridge 1E is attached to the drawer unit and the casing 10E is inclined in the third direction, the boss 451aE and the boss 451bE are able to move in the third direction inside the through-hole 621E. After the developing cartridge 1E is attached to the drawer unit and the separating operation is performed, the boss 451aE and the boss 451bE are able to move in the second direction inside the through-hole 621E. As a result, the position of the casing 10E can be changed in a state where the contact condition between the electric contact surface 611E and the electric connector is maintained in a good manner.

[0172] The number of the bosses provided at the first cover 45E may be one, two, three or more than three.

5-6. Sixth Modification

[0173] In the following a sixth modification of the main embodiment is discussed. Due to the many similarities between the sixth modification and the main embodiment only differences between the main embodiment and the sixth modification will be discussed. With regard to all other features it is referred to the discussion of the main embodiment above.

[0174] Fig. 33 is a perspective view showing a developing cartridge 1F and a drum cartridge 80F of the sixth modification. The developing cartridge 1F shown in Fig. 33 includes a casing 10F, a developing roller 30F, an IC chip assembly 60F, and a first cover 45F. In the embod-

iment shown in Fig. 33, the developing cartridge 1F is attached to the drum cartridge 80F instead of the drawer unit. The drum cartridge 80F includes one developing cartridge holding portion 81F holding the developing cartridge 1F. The developing cartridge holding portion 81F includes a photosensitive drum 82F. When the developing cartridge 1F is attached to the drum cartridge 80F, the developing roller 30F of the developing cartridge 1F is in contact with the photosensitive drum 82F.

[0175] Fig. 34 is a view showing how to attach the drum cartridge 80F to an image forming apparatus 100F in a state where the developing cartridge 1F is attached to the drum cartridge 80F. As shown in Fig. 34, the drum cartridge 80F is attached to a drum cartridge holding portion 101F provided in the image forming apparatus 100F in a state where the developing cartridge 1F is attached to the drum cartridge 80F.

[0176] In the above manner, the similar structure to that of the IC chip assemblies according to the above embodiment or the first to fifth modifications respectively can be applied to the developing cartridge 1F to be attached to the drum cartridge 80F. Fig. 35 is an exploded perspective view showing a detail of the IC chip assembly 60F of the developing cartridge 1F. As shown in Fig. 35, the IC chip assembly 60F of the developing cartridge 1F includes an IC chip 61F as a storage medium and a holder 62F holding the IC chip 61F. The first cover holds the holder 62F at a side of the casing 10F in the first direction.

[0177] The holder 62F includes a first holder member 71F, a second holder member 72F, and a coil spring 73F. The coil spring 73F is an elastic member that can be stretched or compressed in the third direction.

[0178] The first holder member 71F includes a boss 621aF, a boss 621bF, and a boss 621 cF. The boss 621 aF extends in the first direction toward the first cover 45F from a certain surface of the first holder member 71F, and the certain surface faces the first cover 45F. On the other hand, the first cover 45F has a through-hole 451F. The through-hole 451F penetrates through the first cover 45F in the first direction. The boss 621 aF is inserted through the through-hole 451 F.

[0179] Each of the boss 621bF and the boss 621 cF extends in the first direction toward the casing 10F from a certain surface of the first holder member 71F, and the certain surface faces casing 10F. On the other hand, the casing 10F includes a recessed portion 15aF and a recessed portion 15bF. Each of the recessed portion 15aF and the recessed portion 15bF is recessed from the first outer surface 11F of the casing 10F in the first direction. The boss 621bF is inserted through the recessed portion 15aF. The boss 621 cF is inserted through the recessed portion 15bF.

[0180] The through-hole 451F has a size (inner dimension) in the second direction greater than a size (outer dimension) of the boss 621aF in the second direction. The recessed portion 15aF has a size (inner dimension) in the second direction greater than a size (outer dimension) of the boss 621bF in the second direction. Further, the recessed portion 15bF has a size (inner dimension) in the second direction greater than a size (outer dimension) of the boss 621cF in the second direction. Hence, the holder 62F can move in the second direction relative to the casing 10F and the first cover 45F, together with the bosses 621 aF, 621bF, and 621 cF. As the holder 62F moves in the second direction, the IC chip 61F including the electric contact surface 611F also moves in the second direction, together with the holder 62F.

[0181] The through-hole 451F has a size (inner dimension) in the third direction greater than a size (outer dimension) of the boss 621aF in the third direction. The recessed portion 15aF has a size (inner dimension) in the third direction greater than a size (outer dimension) of the boss 621bF in the third direction. Further, the recessed portion 15bF has a size (inner dimension) in the third direction greater than a size (outer dimension) of the boss 621cF in the third direction. Hence, the holder 62F can move in the third direction relative to the casing 10F and the first cover 45F, together with the boss 621 aF, boss 621bF, and boss 621 cF. As the holder 62F moves in the third direction, the IC chip 61F including the electric contact surface 611F also moves in the third direction, together with the holder 62F.

[0182] As shown in Fig. 34, the second holder member 72F includes a recess portion 625F. On the other hand, the drum cartridge 80F includes a convex portion 83F. The recess portion 625F and the convex portion 83F face each other in the third direction. The size of the recess portion 625F gradually enlarges while progressing away from the IC chip 61F in the third direction. The size of the convex portion 83F gradually diminishes while progressing toward a top of the convex portion 83F in the third direction.

[0183] As shown in Fig. 34, the image forming apparatus 100F includes an electric connector 102F. When the drum cartridge 80F is inserted into the image forming apparatus 100F in a state where the developing cartridge 1F is attached to the drum cartridge 80F, the first holder member 71F is brought into contact with a component of the image forming apparatus 100F. The convex portion 83F of the drum cartridge 80F is fitted in the recess portion 625F of the second holder member 72F. Therefore, the position of the second holder member 72F relative to the drum cartridge 80f is fixed. As a result, the holder 62F is nipped between the component of the image forming apparatus 100F and the drum cartridge 80F, whereby the coil spring 73F is compressed in the third direction. When the drum cartridge 80F is further inserted into the image forming apparatus 100F, the electric contact surfaces 611F of the IC chip 61F are brought into contact with the one or more of electric connectors 102F.

[0184] The IC chip 61F is brought into contact with the electric connector 102F, while receiving a repulsion force from the coil spring 73F. The holder 62F is nipped between the electric connector 102F and the convex portion 83F. In this way, the holder 62F is positioned relative to the image forming apparatus 100F and the drum car-

tridge 80F.

[0185] As shown in Fig. 35, the second holder member 72F includes a pawl 714F. The pawl 714F protrudes from the second holder member 72F in a direction that crosses the third direction. In the example of Fig. 35, the pawl 714F protrudes in the first direction from the second holder member 72F. The first holder member 71F has an opening 721F. The pawl 714F is inserted through the opening 721F. This prevents the first holder member 71F from being detached from the second holder member 72F.

[0186] The casing 10F of the developing cartridge 1F includes a first rib 46F and a second rib 55F. The first rib 46F protrudes from the first outer surface 11F in the first direction. The second rib 55F protrudes from the second outer surface 12F in the first direction. The drum cartridge 80F includes a first lever 84F and a second lever 85F. During the separating operation, the first lever 84F and second lever 85F are operated by a driving force supplied from the image forming apparatus, whereupon the first rib 46F is pushed by the first lever 84F and the second rib 55F is pushed by the second lever 85F. This operation changes the positions of the first rib 46F and second rib 55F. As a result, the casing 10F of the developing cartridge 1F and the developing roller 30F move in the second direction and move away from the photosensitive drum 92.

[0187] As described above, also in the developing cartridge 1F, the position of the holder 62F can be changed in the second direction relative to the casing 10F. Accordingly, the position of the casing 10F in the second direction can be changed, while the positions of the electric contact surface 611F relative to the electric connector 102F in the second direction being maintained, that is, the positions of the electric contact surface 611F relative to the electric connector 102F in the second direction being unchanged. Therefore, it is possible to perform the separating operation, while maintaining the electric contact surface 611F and electric connector 102F in contact with each other. Accordingly, abrasion or wear of the electric contact surface 611F can be suppressed.

[0188] Also in the developing cartridge 1F, the electric contact surfaces 611F are movable relative to the casing 10F in the third direction. Accordingly, when the drum cartridge 80F is attached to the image forming apparatus 100F, abrasion or wear of the electric contact surface 611F can be suppressed.

5-7. Other Modifications

[0189] In the above-described embodiments, the IC chip including the electric contact surfaces is fixed to the outer surface of the holder. However, only the electric contact surfaces of the IC chip that serve to contact the electric connectors may be fixed to the outer surface of the holder, but portions of the IC chip other than the electric contact surfaces may be positioned at other portions of the developing cartridge.

[0190] According to the above-described embodiments, the plural gears provided within each of the first gear portion and the second gear portion are engaged with one another through meshing engagement of the gear teeth. However, the plural gears provided within each of the first gear portion and the second gear portion may be engaged with one another through a frictional force. For example, instead of the plural gear teeth, frictional members, such as rubber members, may be provided to the outer circumferences of two gears that engage with each other.

[0191] Shapes of the details in the developing cartridge may differ from those shown in the drawings attached to this application. The respective components employed in the above-described embodiment and modifications can be selectively combined together within an appropriate range so that no inconsistency will arise.

Claims

1. A developing cartridge comprising:

a casing (10; 10A; 10B; 10C; 10E; 10F) for accommodating developer therein;
a developing roller (30; 30F) rotatable about an axis extending in a first direction and positioned at one side of the casing (10; 10A; 10B; 10C; 10E; 10F) in a second direction;
a storage medium (61; 61A; 61B; 61C; 61D; 61E; 61F) having an electric contact surface (611; 611 A; 611 B; 611C; 611 D; 611 E; 611F); and
a holder (62; 62A; 62B; 62C; 62D; 62E; 62F) movable relative to the casing (10; 10A; 10B; 10C; 10E; 10F) in the second direction between a first position and a second position, the holder (62; 62A; 62B; 62C; 62D; 62E; 62F) having an outer surface (620; 620A) at which the electric contact surface (611; 611 A; 611B; 611C; 611 D; 611 E; 611F) is positioned.

2. The developing cartridge according to claim 1, wherein the outer surface (620; 620A) is positioned at a side of the holder (62; 62A; 62B; 62C; 62D; 62E; 62F) in a third direction crossing the electric contact surface (611; 611 A; 611 B; 611C; 611 D; 611 E; 611F), and the outer surface (620; 620A) is movable relative to the casing (10; 10A; 10B; 10C; 10E; 10F) in the third direction.

3. The developing cartridge according to claim 2, wherein the holder (62; 62A; 62E; 62F) includes:

a first end portion (710; 740A; 71 F) in the third direction including the outer surface (620; 620A), and
a second end portion (720; 750A; 72F) separat-

ed from the first end portion (710; 740A; 71F) in the third direction, the first end portion (710; 740A; 71F) being movable relative to the second end portion (720; 750A; 72F) in the third direction.

4. The developing cartridge according to claim 3, wherein the holder (62; 62A; 62F) includes:

an elastic member (73; 75A; 73F) positioned between the first end portion (710; 740A; 71F) and the second end portion (720; 750A; 72F),
the elastic member (73; 75A; 73F) being configured to be stretched or compressed in the third direction between a first state and a second state, a length in the third direction of the elastic member (73; 75A; 73F) in the first state being greater than a length in the third direction of the elastic member (73; 75A; 73F) in the second state.

5. The developing cartridge according to claim 4, wherein the holder (62; 62A; 62F) is movable relative to the casing (10; 10A; 10F) in the second direction between the first position and the second position in a state where the elastic member (73; 75A; 73F) is in the second state.

6. The developing cartridge according to claim 5, wherein the elastic member (73; 75A; 73F) is configured to be changed from the first state to the second state when the developing cartridge (1; 1 A; 1F) is attached to an image forming apparatus,
wherein the electric contact surface (611; 611 A; 611F) is configured to be in contact with an electric connector (913; 102F) of the image forming apparatus in a state where the elastic member (73; 75A; 73F) is in the second state.

7. The developing cartridge according to any one of claims 4 to 6, wherein a length in the third direction of the elastic member (73; 75A; 73F) in the second state is smaller than a natural length in the third direction of the elastic member (73; 75A;73F).

8. The developing cartridge according to any one of claims 3 to 7, wherein the holder (62; 62F) has a remote state in which between the first end portion (710; 740A; 71F) and the second end portion (720; 750A; 72F) in the third direction is a first distance and a proximity state in which between the first end portion (710; 740A; 71F) and the second end portion (720; 750A; 72F) in the third direction is a second distance which is smaller than the first distance, the holder (62; 62A; 62F) being urged in a direction such that the first end portion (710; 740A; 71F) and the second end portion (720; 750A; 72F) is moved away from each other in a state where the holder (62; 62A; 62F) is in the proximity position.

9. The developing cartridge according to claim 8, wherein the holder (62; 62A; 62F) is changed from the remote state to the proximity state when the developing cartridge (1; 1A; 1F) is attached to an image forming apparatus,
wherein the electric contact surface (611; 611A; 611F) is in contact with an electric connector (913; 102F) of the image forming apparatus when the holder (62; 62A; 62F) is in the proximity state, and
wherein the holder (62; 62A; 62F) is movable relative to the casing (10; 10A; 10F) between the first position and the second position in the second direction in a state where the holder (62; 62A; 62F) is in the proximity state.

10. The developing cartridge according to claim 3, wherein the holder (62E) is an elastic member being configured to be stretched or compressed in the third direction.

11. The developing cartridge according to any one of claims 1 to 10, wherein the holder (62; 62A; 62B; 62C; 62D; 62E; 62F) is positioned at a side of the casing (10; 10A; 10B; 10C; 10E; 10F) in the first direction.

12. The developing cartridge according to claim 11, further comprising:

a holder cover (45; 45F) positioned at the side of the casing (10; 10F) in the first direction, and covering at least a portion of the holder (62; 62F),
wherein the holder cover (45; 45F) has one of a first recessed portion and a first through-hole (451 a, 451 b; 451 F), and
wherein the holder (62; 62F) includes a first boss (621a, 621b; 621aF) extending in the first direction and inserted through one of the first recessed portion and the first through-hole (451a, 451b; 451F), the first boss (621a, 621b; 621aF) being movable in the second direction relative to one of the first recessed portion and the first through-hole (451 a, 451 b; 451F) when the holder (62; 62F) moves relative to the casing (10; 10F) in the second direction between the first position and the second position.

13. The developing cartridge according to claim 12, wherein said one of the first recessed portion and the first through-hole (451 a, 451 b; 451F) has a dimension in the second direction greater than a dimension of the first boss (621 a, 621 b; 621 aF) in the second direction.

14. An image forming apparatus including:

an electric connector;
a developing cartridge holding portion (91; 81F) and
a developing cartridge according to claim 5, wherein:

the developing cartridge is configured to be removably attached to the cartridge holding portion (91; 81F),
the elastic member (73; 75A; 73F) is configured to be changed from the first state to the second state when the developing cartridge (1; 1A; 1F) is attached to the cartridge holding portion (91; 81F), and
the electric contact surface (611; 611 A; 611F) is configured to be in contact with the electric connector (913; 102F) in a state in which the developing cartridge (1; 1 A; 1F) is attached to the cartridge holding portion (91; 81F).

15. Image forming apparatus according to claim 14, wherein:

the holder (62; 62F) has a remote state in which between the first end portion (710; 740A; 71F) and the second end portion (720; 750A; 72F) in the third direction is a first distance and a proximity state in which between the first end portion (710; 740A; 71F) and the second end portion (720; 750A; 72F) in the third direction is a second distance which is smaller than the first distance, the holder (62; 62A; 62F) being urged in a direction such that the first end portion (710; 740A; 71F) and the second end portion (720; 750A; 72F) is moved away from each other in a state where the holder (62; 62A; 62F) is in the proximity position
the developing cartridge is configured to be changed from the remote state to the proximity state when the developing cartridge (1; 1A; 1F) is attached to the cartridge holding portion (91; 81F),
wherein the electric contact surface (611; 611 A; 611F) is configured to be in contact with the electric connector (913; 102F) of the image forming apparatus when the holder (62; 62A; 62F) is in the proximity state, and
wherein the holder (62; 62A; 62F) is movable relative to the casing (10; 10A; 10F) between the first position and the second position in the second direction in a state where the holder (62; 62A; 62F) is in the proximity state.

Amended claims in accordance with Rule 137(2) EPC.

1. A developing cartridge comprising:

a casing (10; 10A; 10B; 10C; 10E; 10F) for accommodating developer therein;
a developing roller (30; 30F) rotatable about an axis extending in a first direction and positioned at one side of the casing (10; 10A; 10B; 10C; 10E; 10F) in a second direction;
a storage medium (61; 61A; 61B; 61C; 61D; 61E; 61F) having an electric contact surface (611; 611A; 611B; 611C; 611D; 611E; 611F); and
a holder (62; 62A; 62B; 62C; 62D; 62E; 62F) positioned at a side of the casing (10; 10A; 10B; 10C; 10E; 10F) in the first direction and movable relative to the casing (10; 10A; 10B; 10C; 10E; 10F) in the second direction between a first position and a second position, the holder (62; 62A; 62B; 62C; 62D; 62E; 62F) having an outer surface (620; 620A) at which the electric contact surface (611; 611A; 611B; 611C; 611D; 611E; 611F) is positioned, and
a holder cover (45; 45F) positioned at the side of the casing (10; 10F) in the first direction, and covering at least a portion of the holder (62; 62F), wherein the holder cover (45; 45F) has one of a first recessed portion and a first through-hole (451a, 451b; 451F), and
wherein the holder (62; 62F) includes a first boss (621a, 621b; 621aF) extending in the first direction and inserted through one of the first recessed portion and the first through-hole (451a, 451b; 451F), the first boss (621a, 621b; 621aF) being movable in the second direction relative to one of the first recessed portion and the first through-hole (451a, 451b; 451F) when the holder (62; 62F) moves relative to the casing (10; 10F) in the second direction between the first position and the second position,
characterized in that said one of the first recessed portion and the first through-hole (451a, 451b; 451F) has a dimension in the second direction greater than a dimension of the first boss (621a, 621b; 621aF) in the second direction and the first through-hole (451a, 451b; 451F) has a dimension in the third direction greater than a dimension of the first boss (621a, 621b; 621aF) in the third direction.

2. The developing cartridge according to claim 1, wherein the outer surface (620; 620A) is positioned at a side of the holder (62; 62A; 62B; 62C; 62D; 62E; 62F) in a third direction crossing the electric contact surface (611; 611A; 611B; 611C; 611D; 611E; 611F), and the outer surface (620; 620A) is movable

relative to the casing (10; 10A; 10B; 10C; 10E; 10F) in the third direction.

3. The developing cartridge according to claim 2, wherein the holder (62; 62A; 62E; 62F) includes:

a first end portion (710; 740A; 71F) in the third direction including the outer surface (620; 620A), and
a second end portion (720; 750A; 72F) separated from the first end portion (710; 740A; 71F) in the third direction, the first end portion (710; 740A; 71F) being movable relative to the second end portion (720; 750A; 72F) in the third direction.

4. The developing cartridge according to claim 3, wherein the holder (62; 62A; 62F) includes:

an elastic member (73; 75A; 73F) positioned between the first end portion (710; 740A; 71F) and the second end portion (720; 750A; 72F),
the elastic member (73; 75A; 73F) being configured to be stretched or compressed in the third direction between a first state and a second state, a length in the third direction of the elastic member (73; 75A; 73F) in the first state being greater than a length in the third direction of the elastic member (73; 75A; 73F) in the second state.

5. The developing cartridge according to claim 4, wherein the holder (62; 62A; 62F) is movable relative to the casing (10; 10A; 10F) in the second direction between the first position and the second position in a state where the elastic member (73; 75A; 73F) is in the second state.

6. The developing cartridge according to claim 5, wherein the elastic member (73; 75A; 73F) is configured to be changed from the first state to the second state when the developing cartridge (1; 1A; 1F) is attached to an image forming apparatus,
wherein the electric contact surface (611; 611A; 611F) is configured to be in contact with an electric connector (913; 102F) of the image forming apparatus in a state where the elastic member (73; 75A; 73F) is in the second state.

7. The developing cartridge according to any one of claims 4 to 6, wherein a length in the third direction of the elastic member (73; 75A; 73F) in the second state is smaller than a natural length in the third direction of the elastic member (73; 75A;73F).

8. The developing cartridge according to any one of claims 3 to 7, wherein the holder (62; 62F) has a remote state in which between the first end portion (710; 740A; 71F) and the second end portion (720; 750A; 72F) in the third direction is a first distance and a proximity state in which between the first end portion (710; 740A; 71F) and the second end portion (720; 750A; 72F) in the third direction is a second distance which is smaller than the first distance, the holder (62; 62A; 62F) being urged in a direction such that the first end portion (710; 740A; 71F) and the second end portion (720; 750A; 72F) is moved away from each other in a state where the holder (62; 62A; 62F) is in the proximity position.

9. The developing cartridge according to claim 8, wherein the holder (62; 62A; 62F) is changed from the remote state to the proximity state when the developing cartridge (1; 1A; 1F) is attached to an image forming apparatus,
wherein the electric contact surface (611; 611A; 611F) is in contact with an electric connector (913; 102F) of the image forming apparatus when the holder (62; 62A; 62F) is in the proximity state, and
wherein the holder (62; 62A; 62F) is movable relative to the casing (10; 10A; 10F) between the first position and the second position in the second direction in a state where the holder (62; 62A; 62F) is in the proximity state.

10. The developing cartridge according to claim 3, wherein the holder (62E) is an elastic member being configured to be stretched or compressed in the third direction.

11. An image forming apparatus including:

an electric connector;
a developing cartridge holding portion (91; 81F) and
a developing cartridge according to claim 5, wherein:

the developing cartridge is configured to be removably attached to the cartridge holding portion (91; 81F),
the elastic member (73; 75A; 73F) is configured to be changed from the first state to the second state when the developing cartridge (1; 1A; 1F) is attached to the cartridge holding portion (91; 81F), and
the electric contact surface (611; 611A; 611F) is configured to be in contact with the electric connector (913; 102F) in a state in which the developing cartridge (1; 1A; 1F) is attached to the cartridge holding portion (91; 81F).

12. Image forming apparatus according to claim 11, wherein:

the holder (62; 62F) has a remote state in which between the first end portion (710; 740A; 71F) and the second end portion (720; 750A; 72F) in the third direction is a first distance and a proximity state in which between the first end portion (710; 740A; 71F) and the second end portion (720; 750A; 72F) in the third direction is a second distance which is smaller than the first distance, the holder (62; 62A; 62F) being urged in a direction such that the first end portion (710; 740A; 71F) and the second end portion (720; 750A; 72F) is moved away from each other in a state where the holder (62; 62A; 62F) is in the proximity position

the developing cartridge is configured to be changed from the remote state to the proximity state when the developing cartridge (1; 1A; 1F) is attached to the cartridge holding portion (91; 81F),

wherein the electric contact surface (611; 611A; 611F) is configured to be in contact with the electric connector (913; 102F) of the image forming apparatus when the holder (62; 62A; 62F) is in the proximity state, and

wherein the holder (62; 62A; 62F) is movable relative to the casing (10; 10A; 10F) between the first position and the second position in the second direction in a state where the holder (62; 62A; 62F) is in the proximity state.

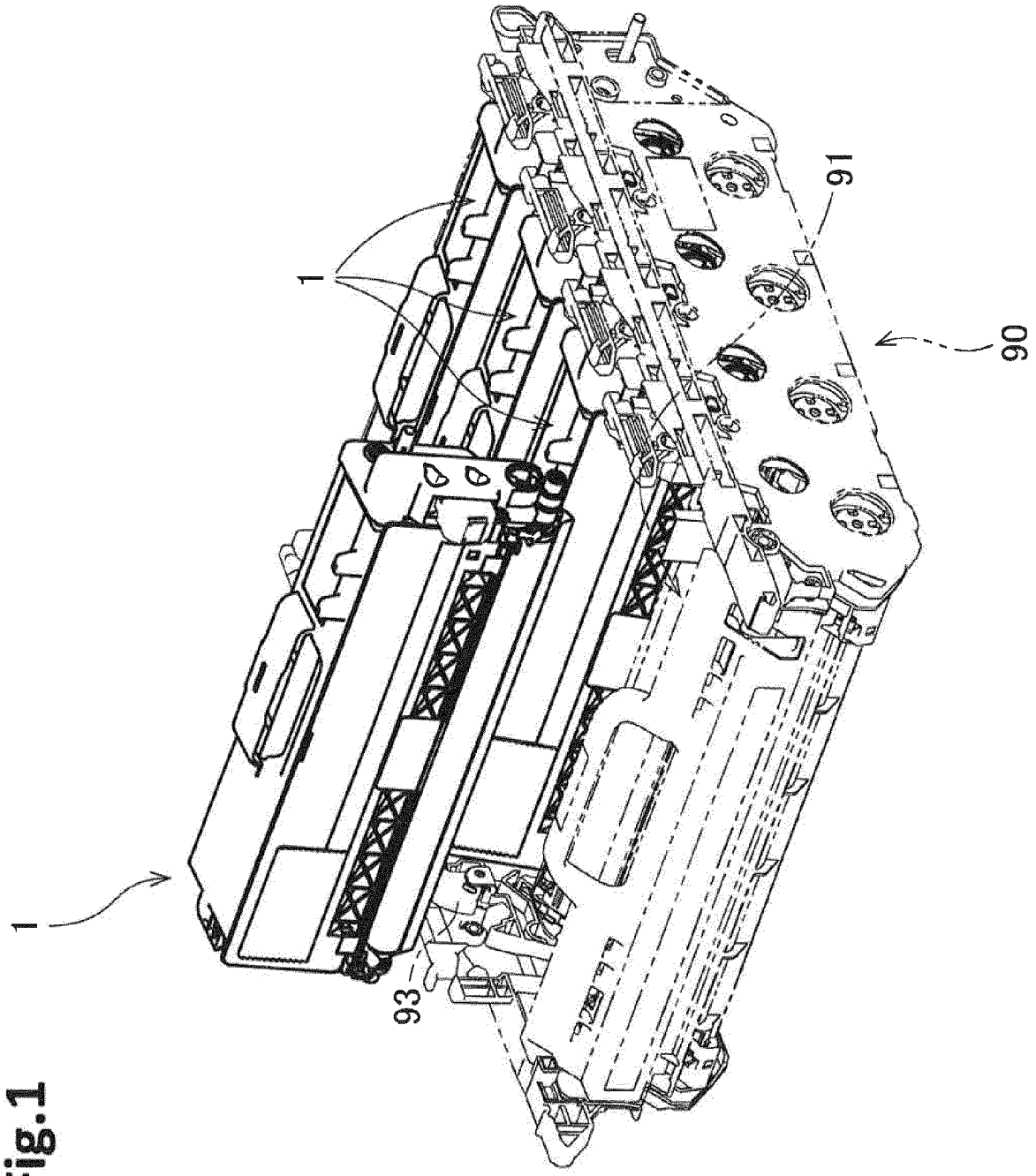

Fig.1

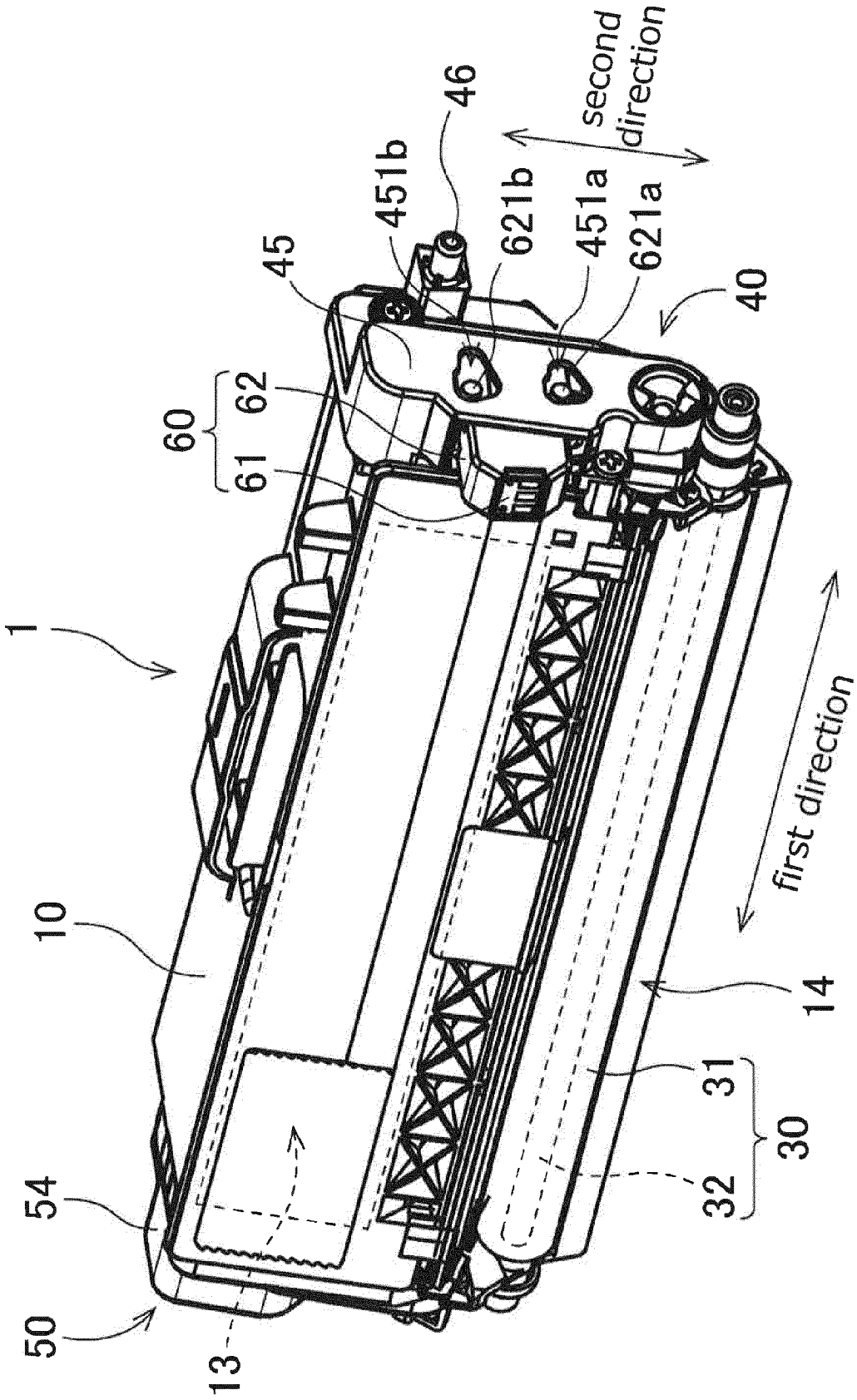
1
10
54
50
13
60
61
62
45
451b
46
621b
451a
621a
40
second direction
first direction
14
31
30
32

Fig.2

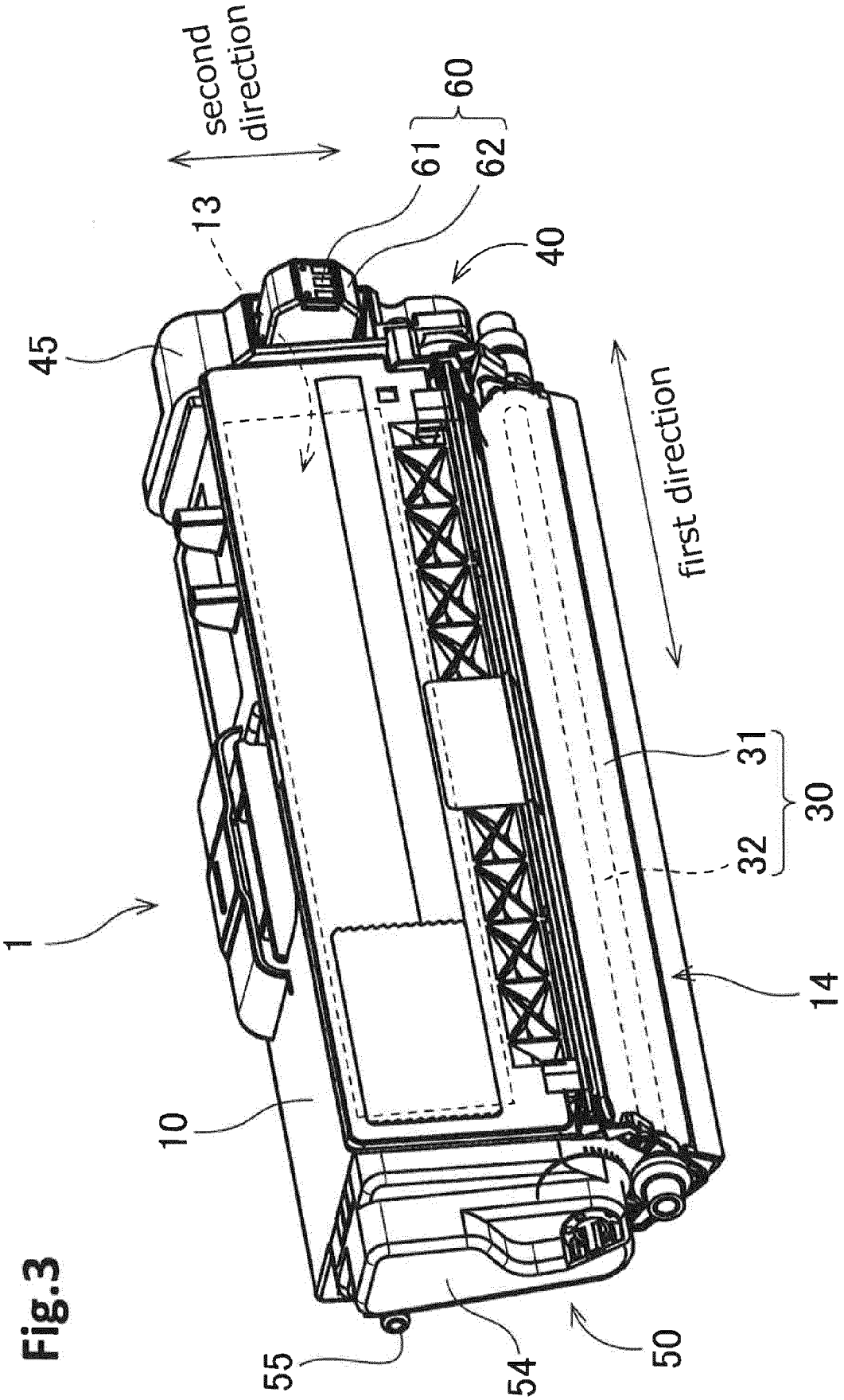
second direction
60
61
62
13
40
45
first direction
31
30
32
1
14
10
55
54
50

Fig.3

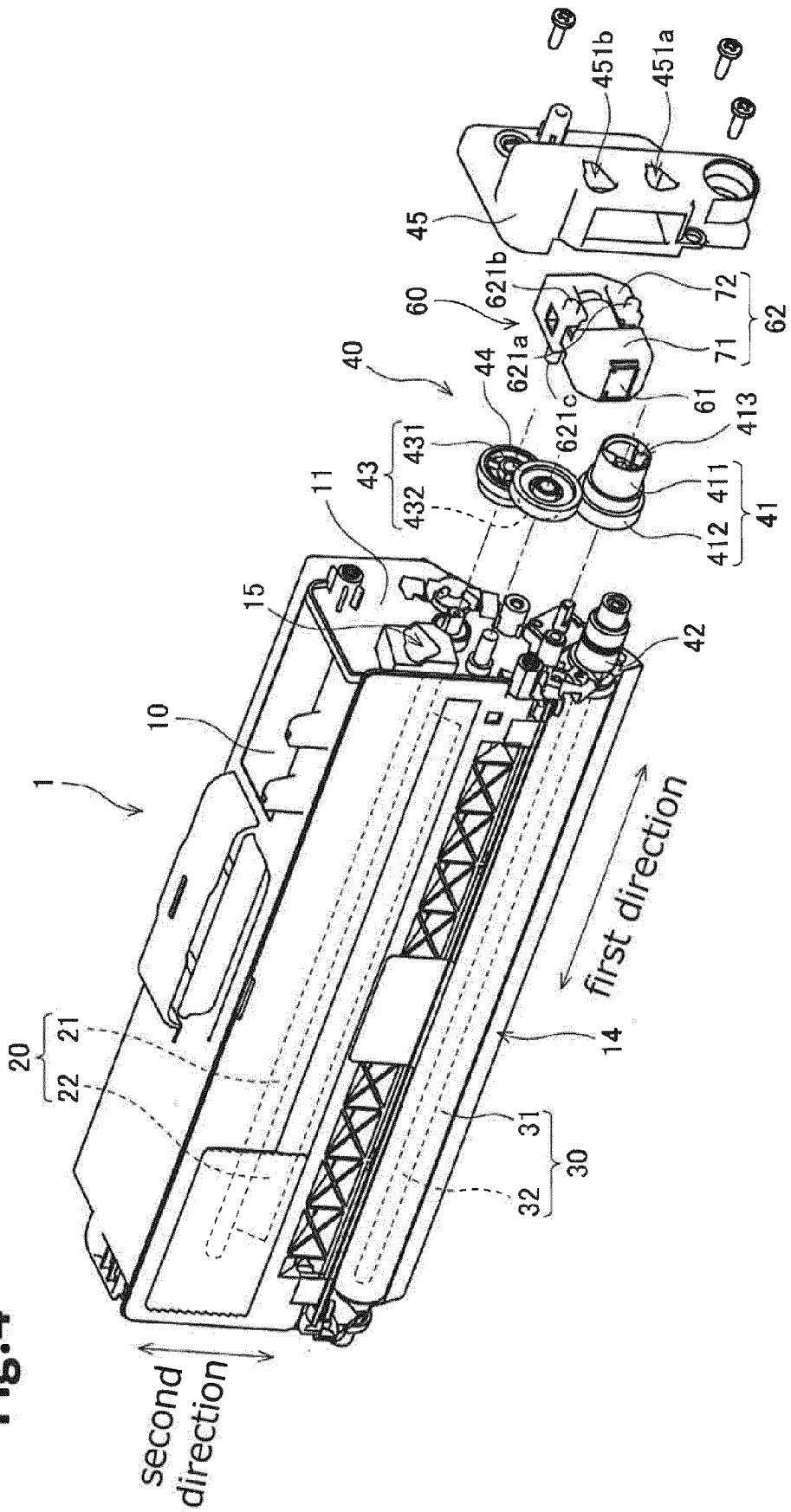
1
10
11
15
20
21
22
30
31
32
14
first direction
second direction
40
41
411
412
413
42
43
431
432
44
45
451a
451b
60
61
621a
621b
621c
62
71
72

Fig.4

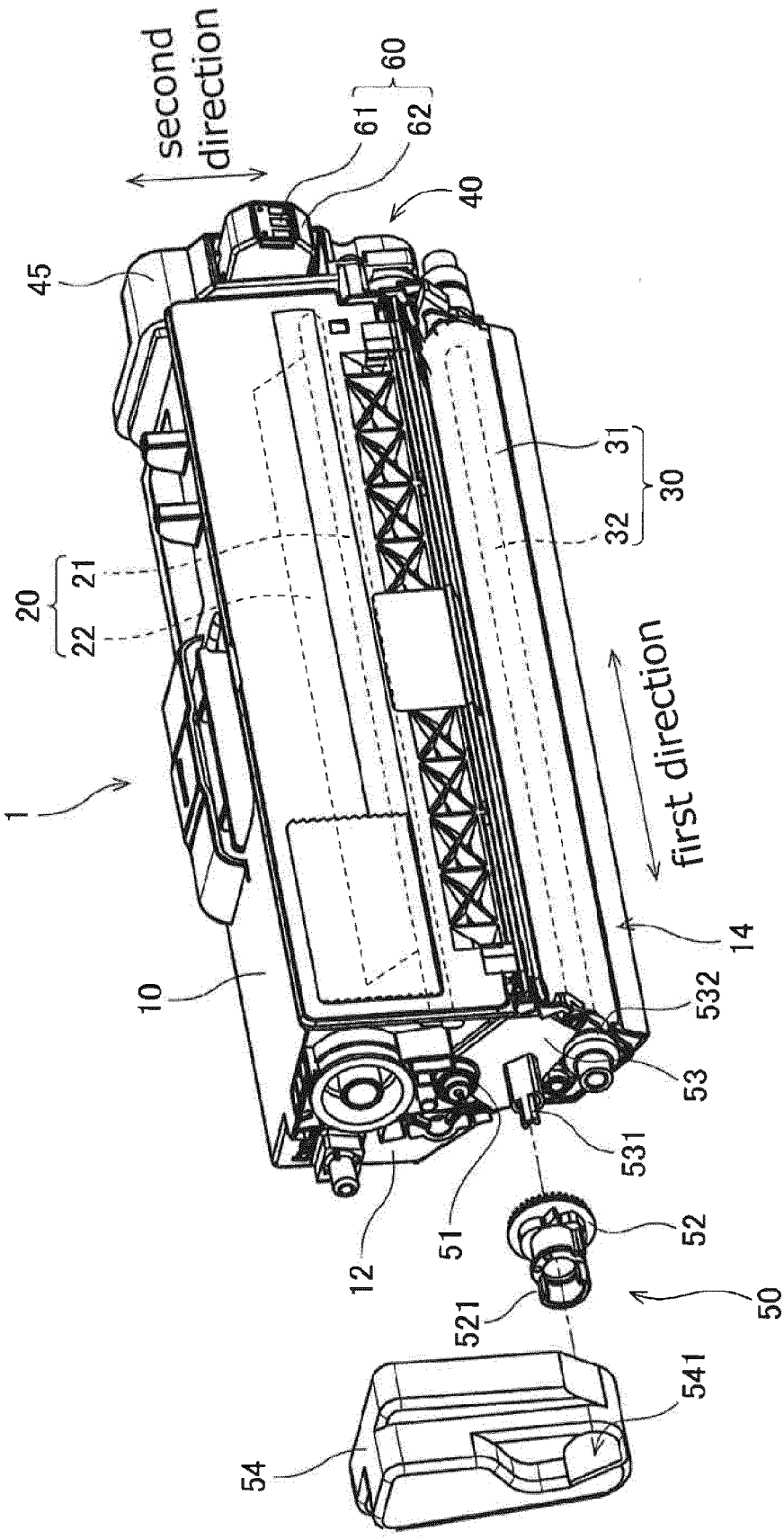
second direction
60
61
62
40
45
31
30
32
20
21
22
1
first direction
14
10
532
53
531
52
51
12
521
50
541
54

Fig.5

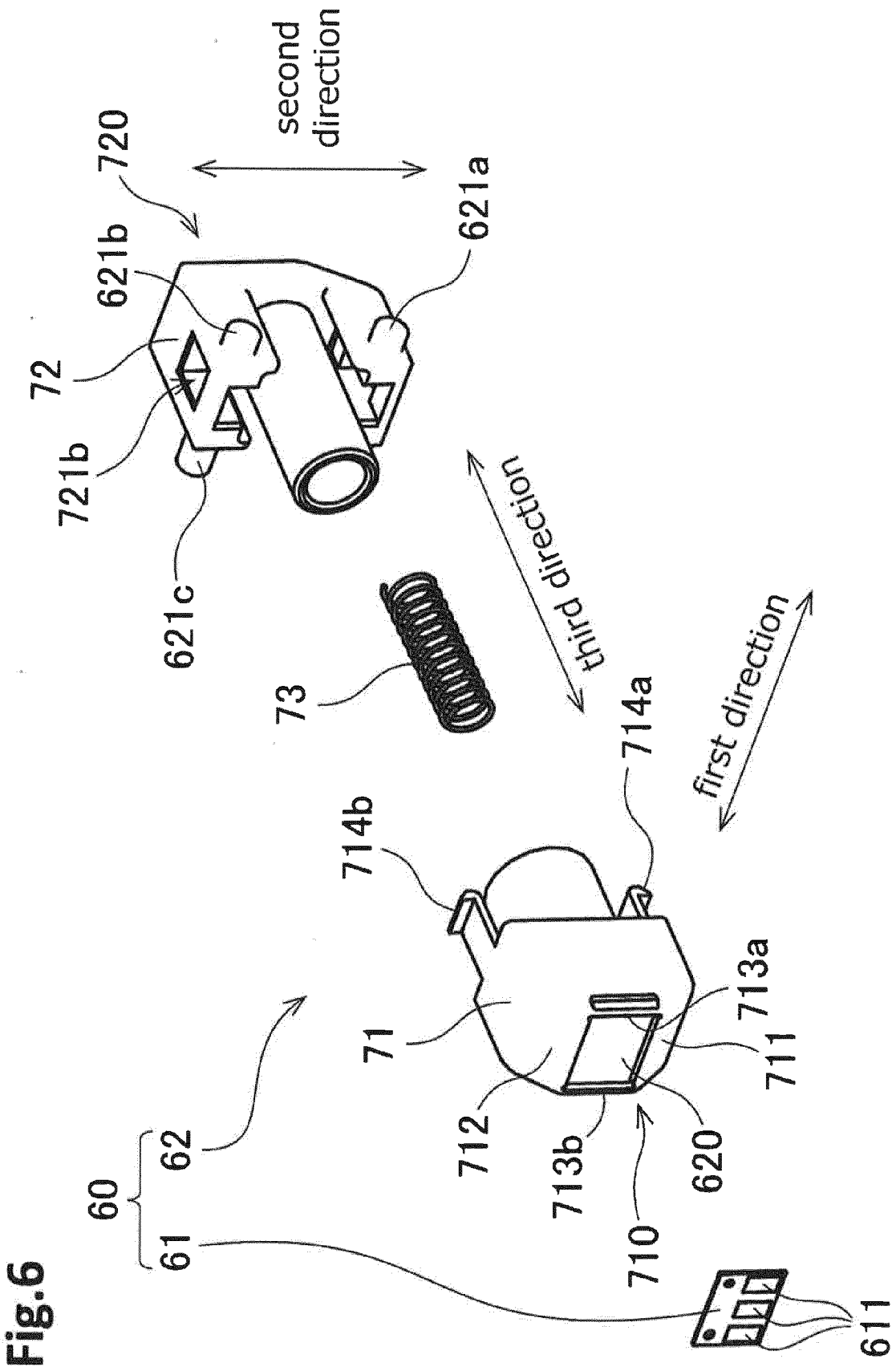
second direction
720
621b
621a
72
721b
621c
third direction
73
714a
first direction
714b
713a
71
711
712
713b
620
710
60
62
61
611

Fig.6

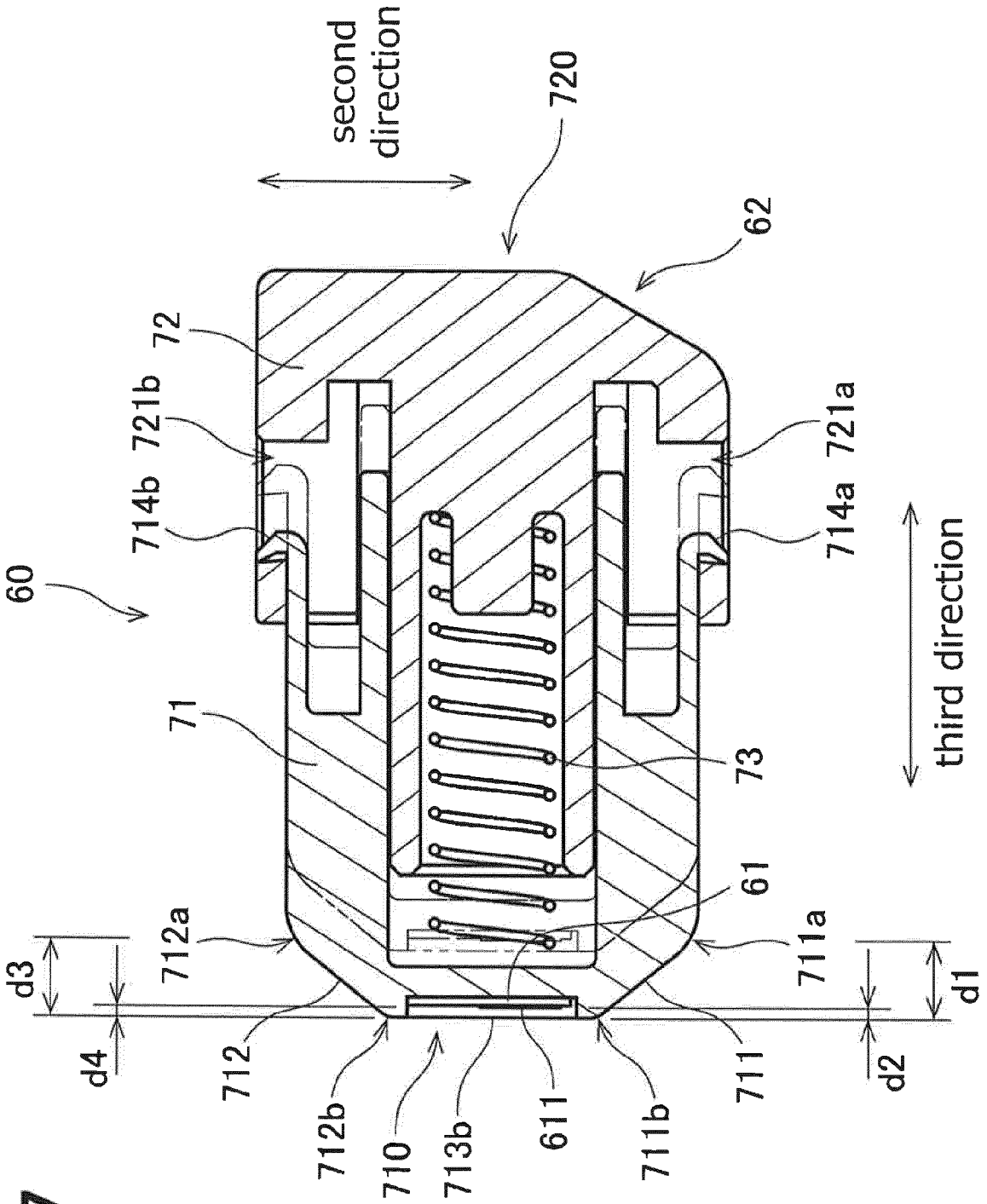
second direction
720
62
72
721b
721a
714b
714a
60
third direction
71
73
61
712a
711a
d3
d1
d4
d2
712
711
712b
710
713b
611
711b

Fig.7

Fig.8

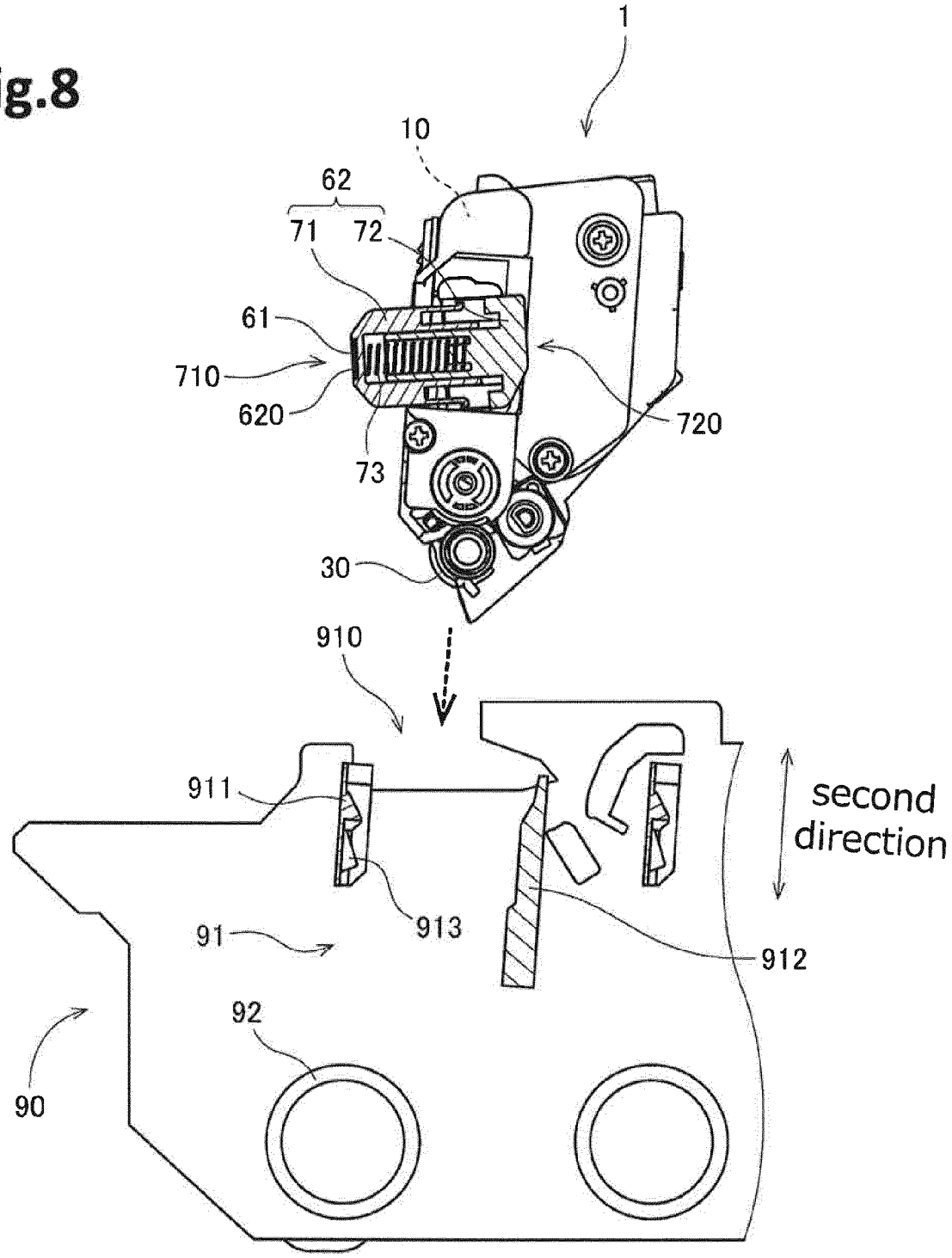
1
10
62
71
72
61
710
620
720
73
30
910
911
913
91
912
92
90
second direction

Fig.9

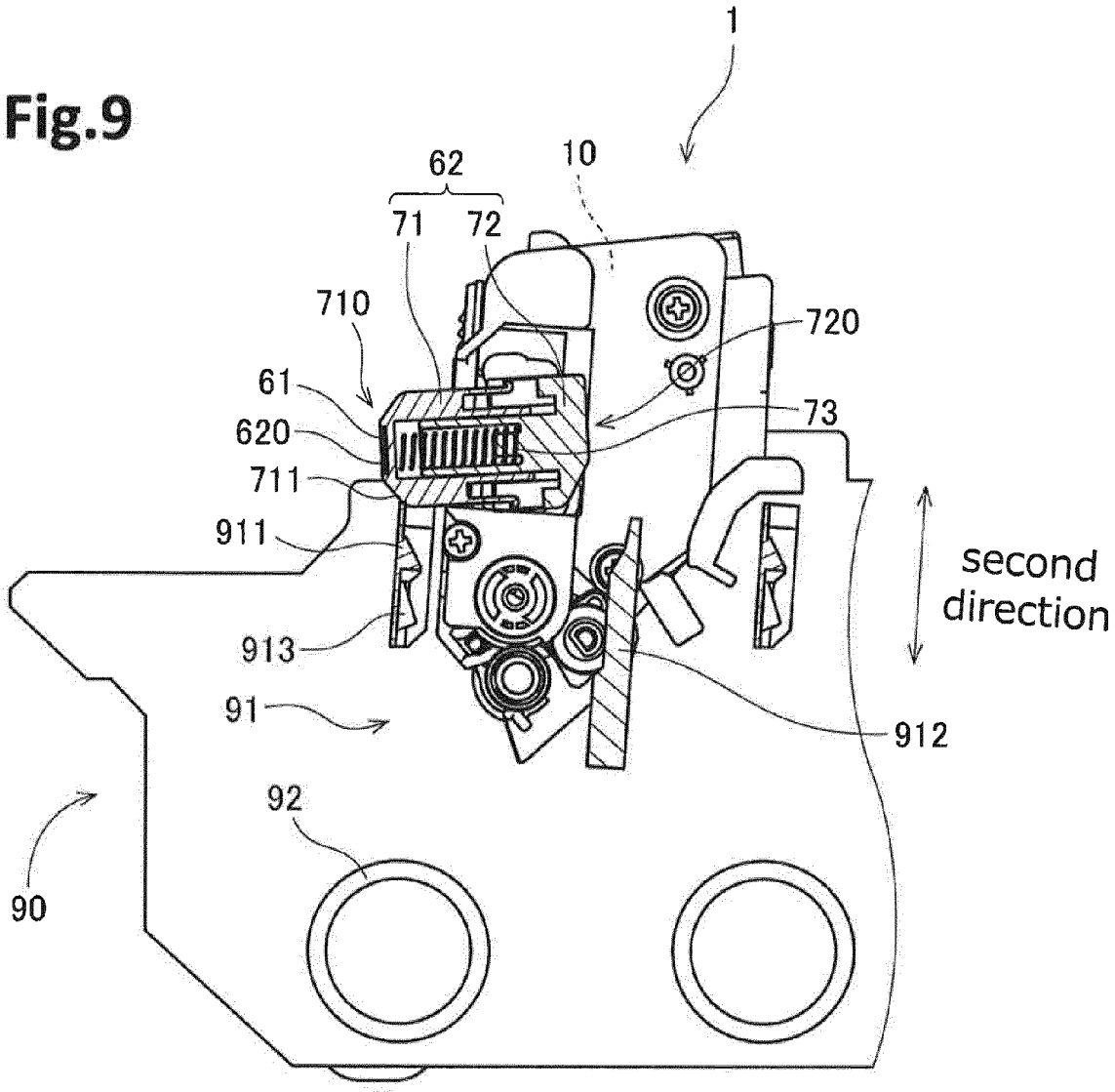
1
62
10
71
72
710
720
61
73
620
711
911
second direction
913
91
912
92
90

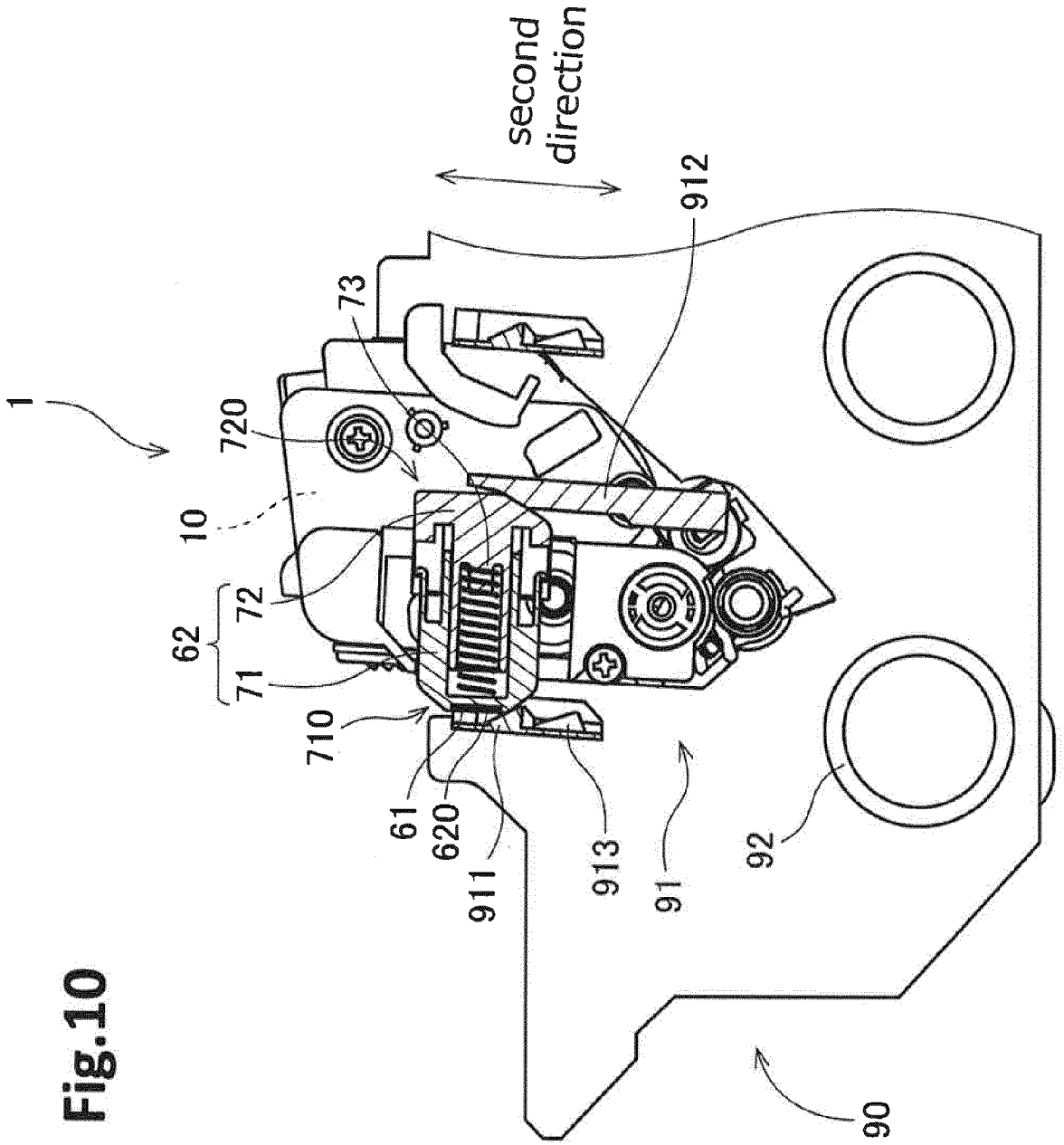
second direction
1
720
73
912
10
62
72
71
710
61
620
911
913
91
92
90

Fig.10

Fig.11

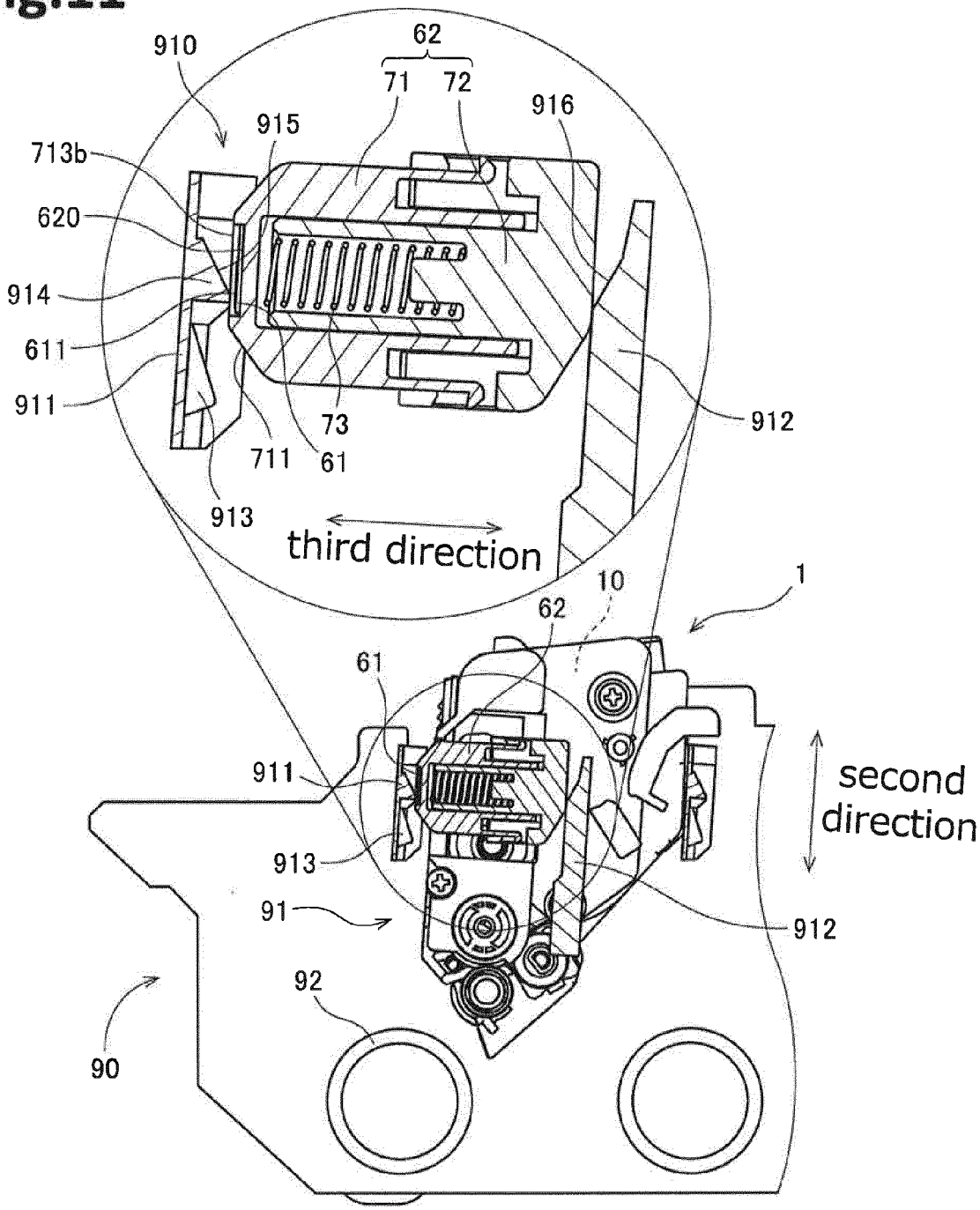
910
62
71
72
916
915
713b
620
914
611
911
912
73
711
61
913
third direction
1
10
62
61
911
second direction
913
91
912
92
90

Fig.12

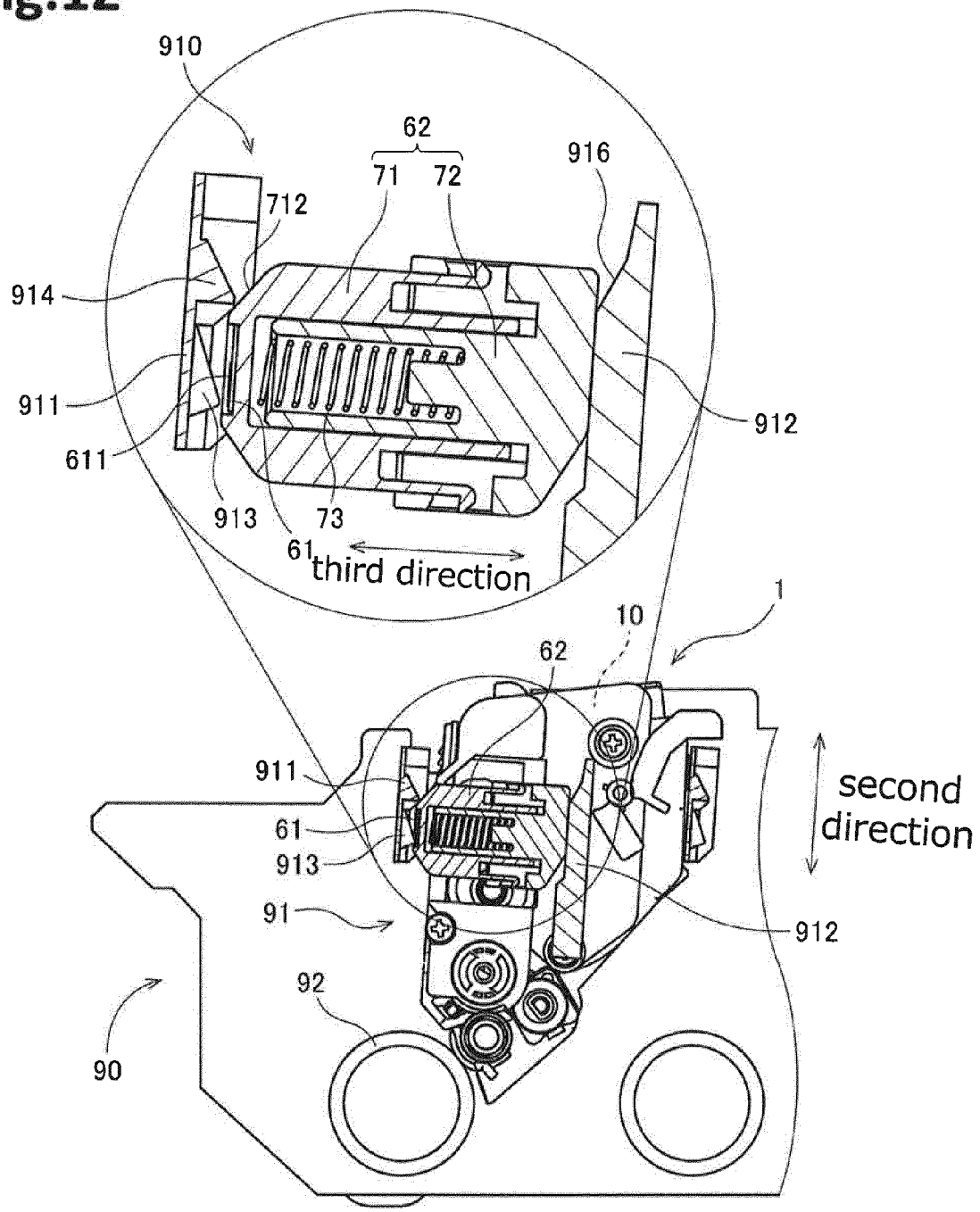
910
62
71
72
916
712
914
911
611
913
73
61
third direction
912
1
10
62
911
61
913
91
92
90
second direction
912

Fig.13

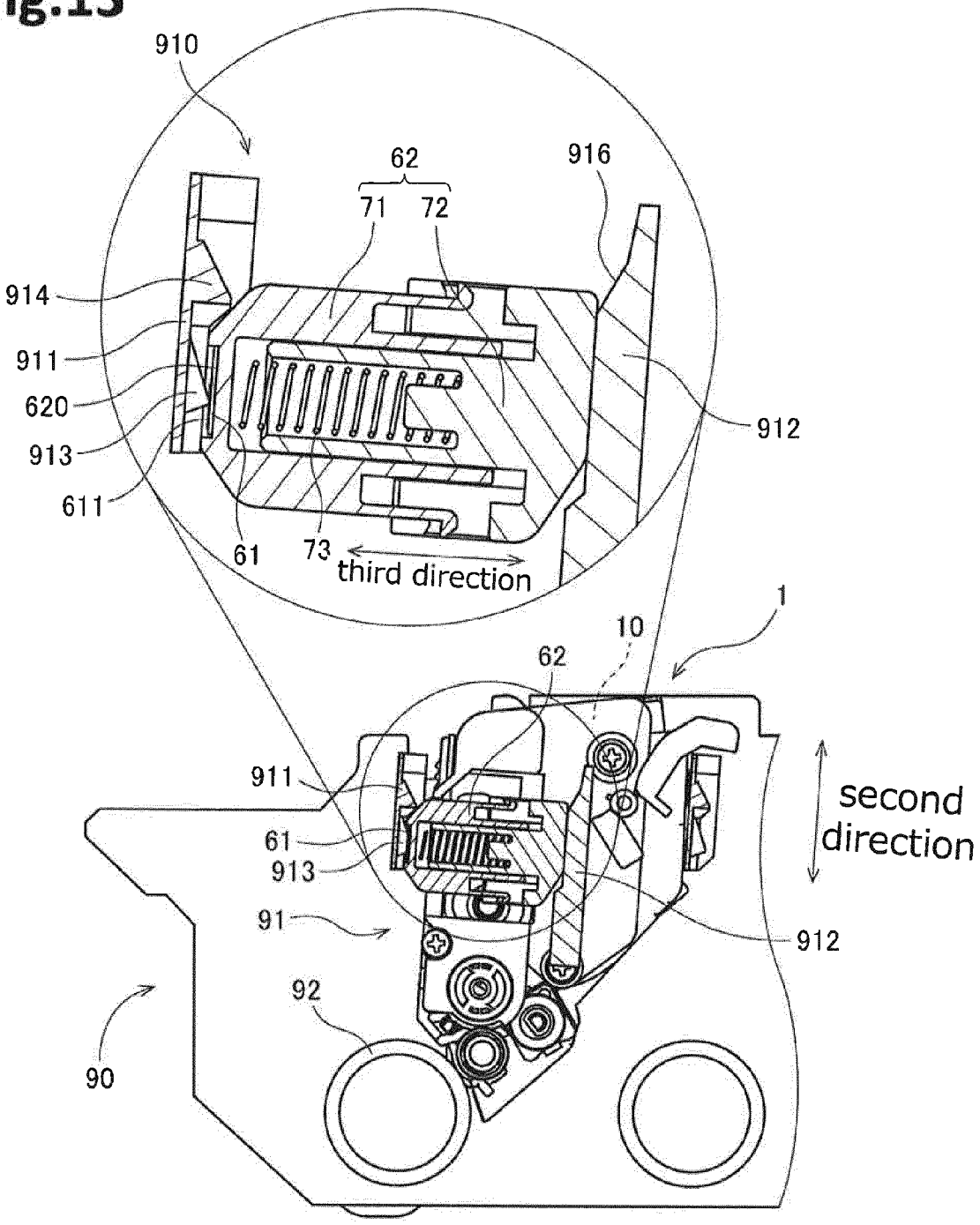
910
62
71
72
916
914
911
620
913
611
912
61
73
third direction
1
10
62
911
61
913
91
92
90
912
second direction

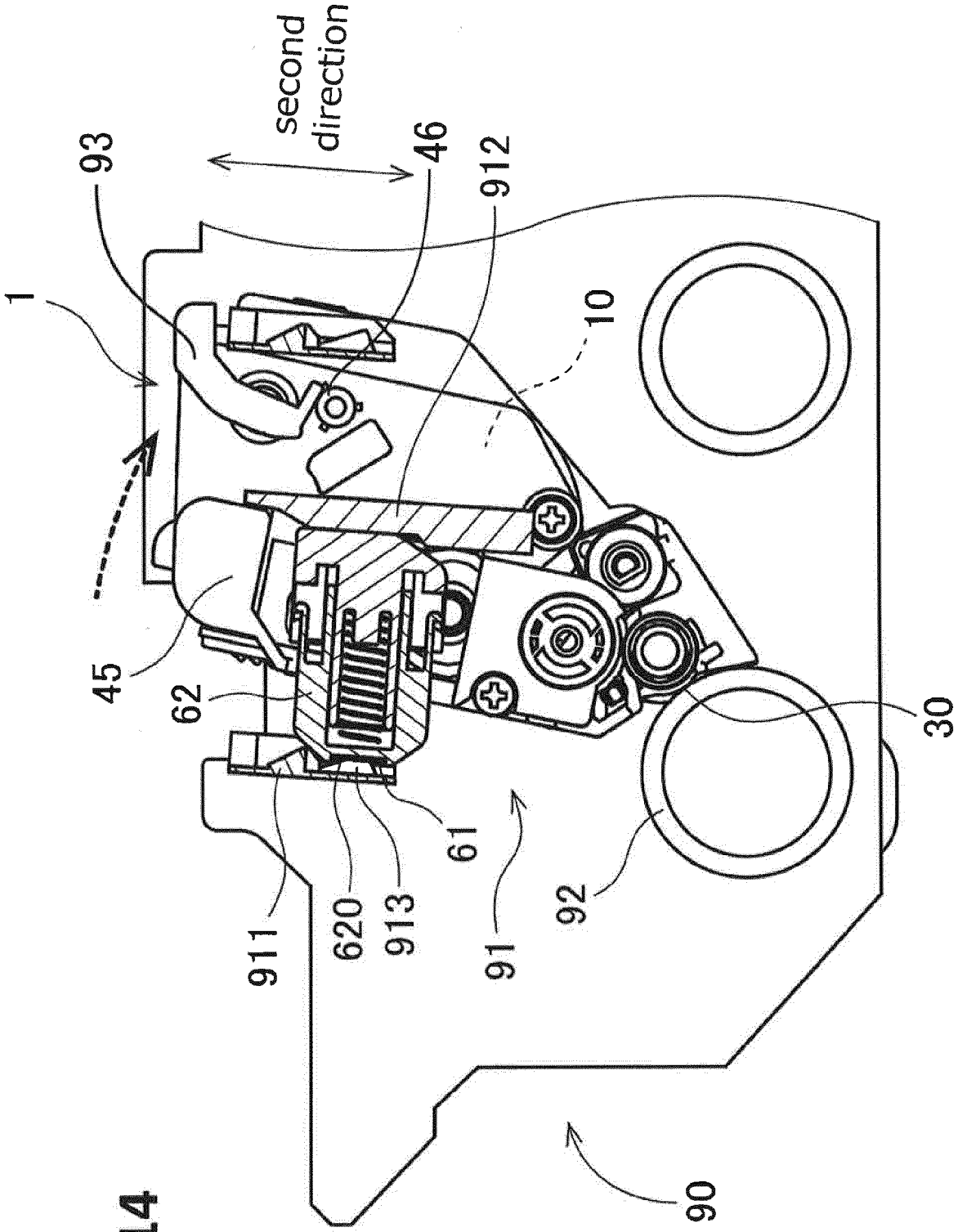

Fig.14

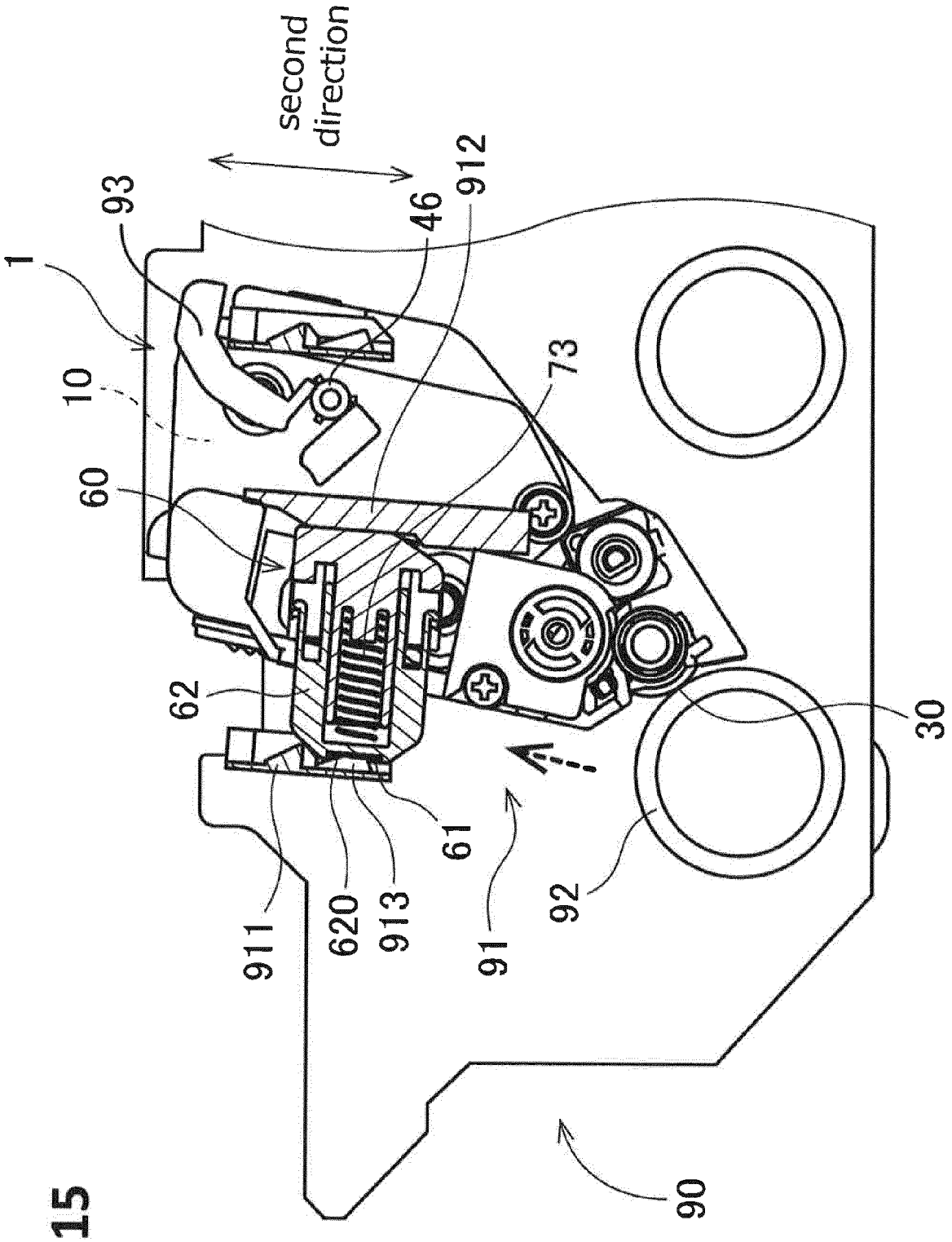
second direction
1
93
46
912
10
73
60
62
30
61
911
620
913
91
92
90

Fig.15

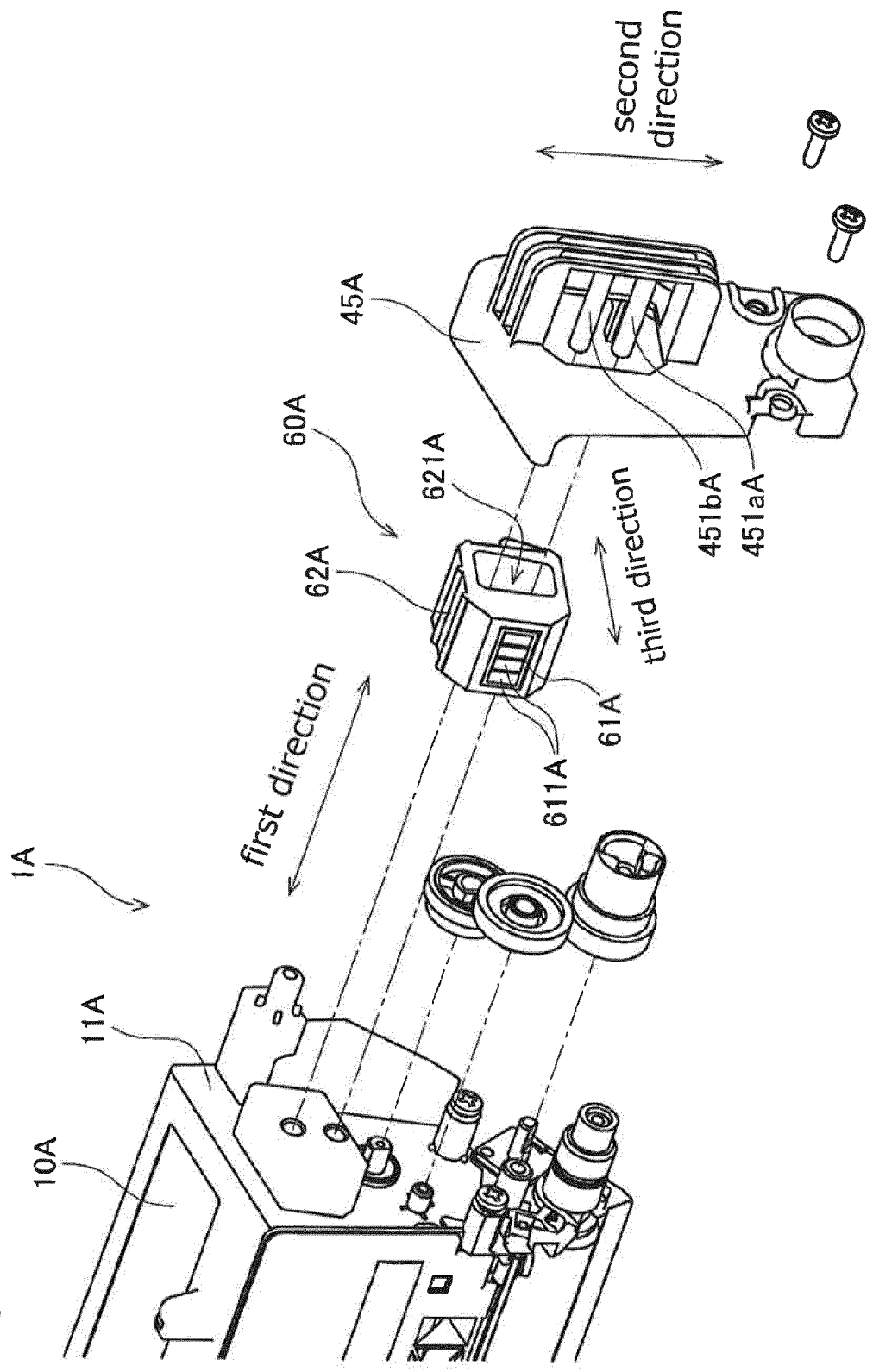
second direction
45A
60A
621A
451bA
451aA
third direction
62A
first direction
61A
611A
1A
11A
10A

Fig.16

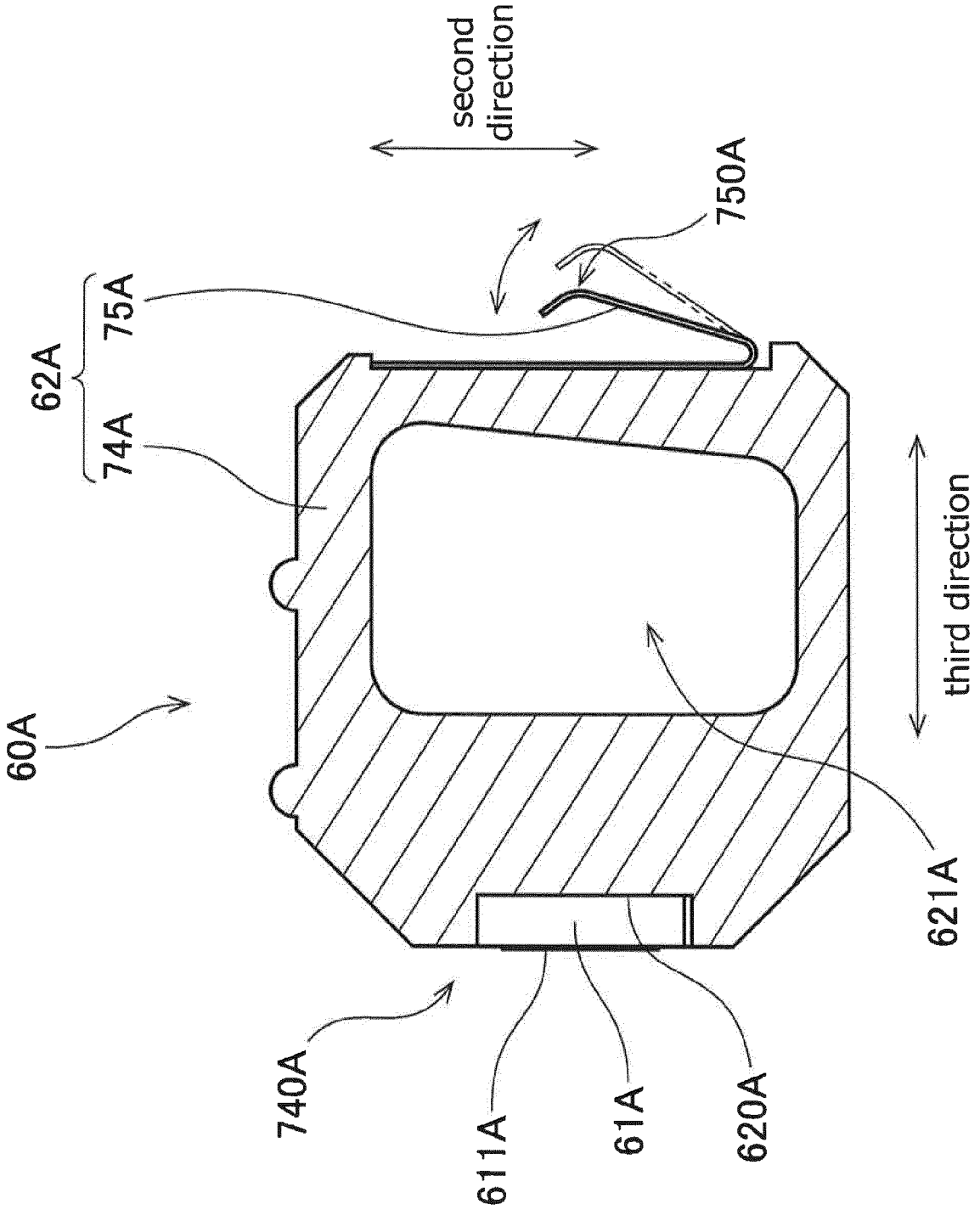
second direction
750A
62A
75A
74A
60A
third direction
621A
740A
611A
61A
620A

Fig.17

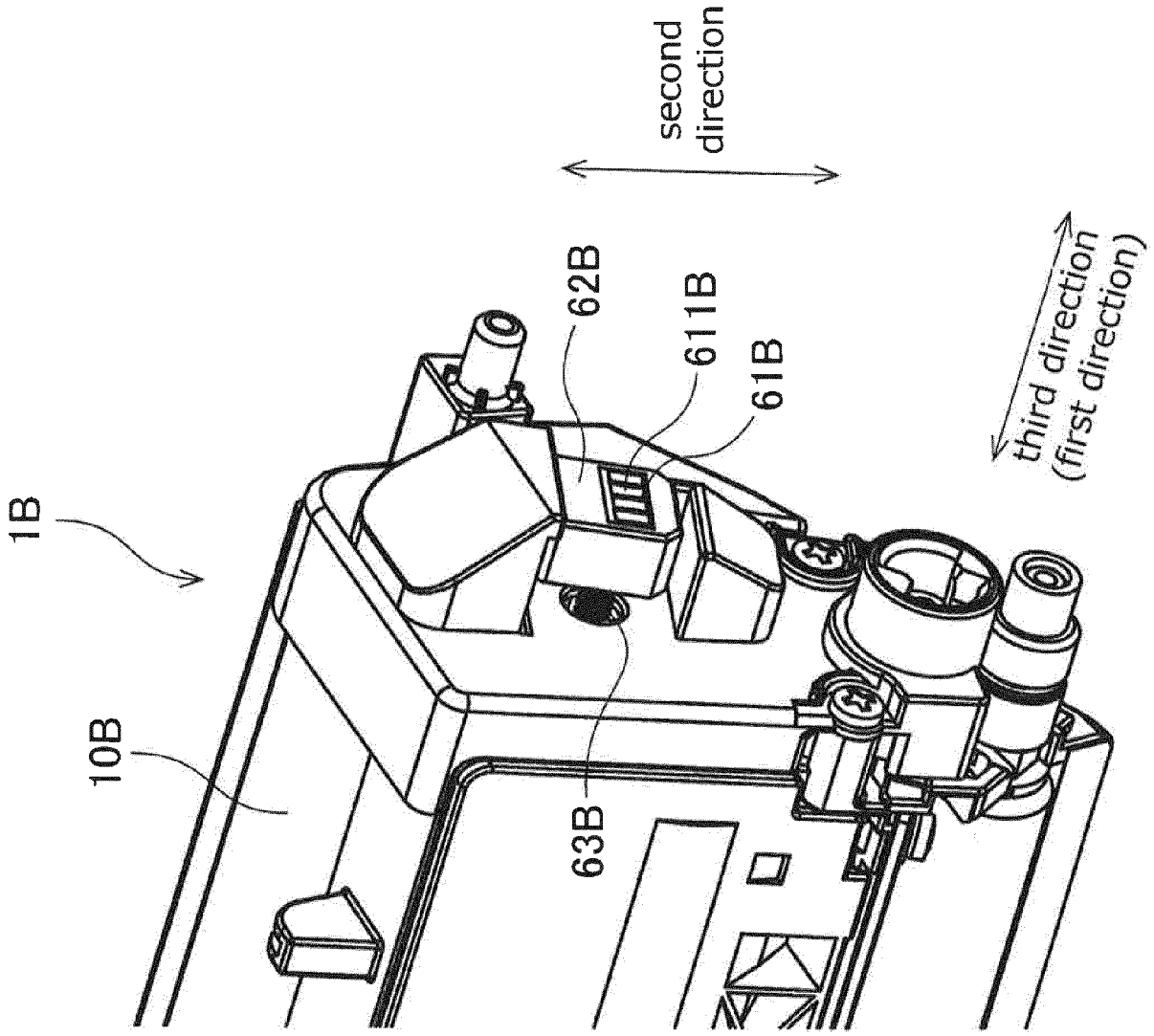
1B
10B
62B
611B
61B
63B
second direction
third direction (first direction)

Fig.18

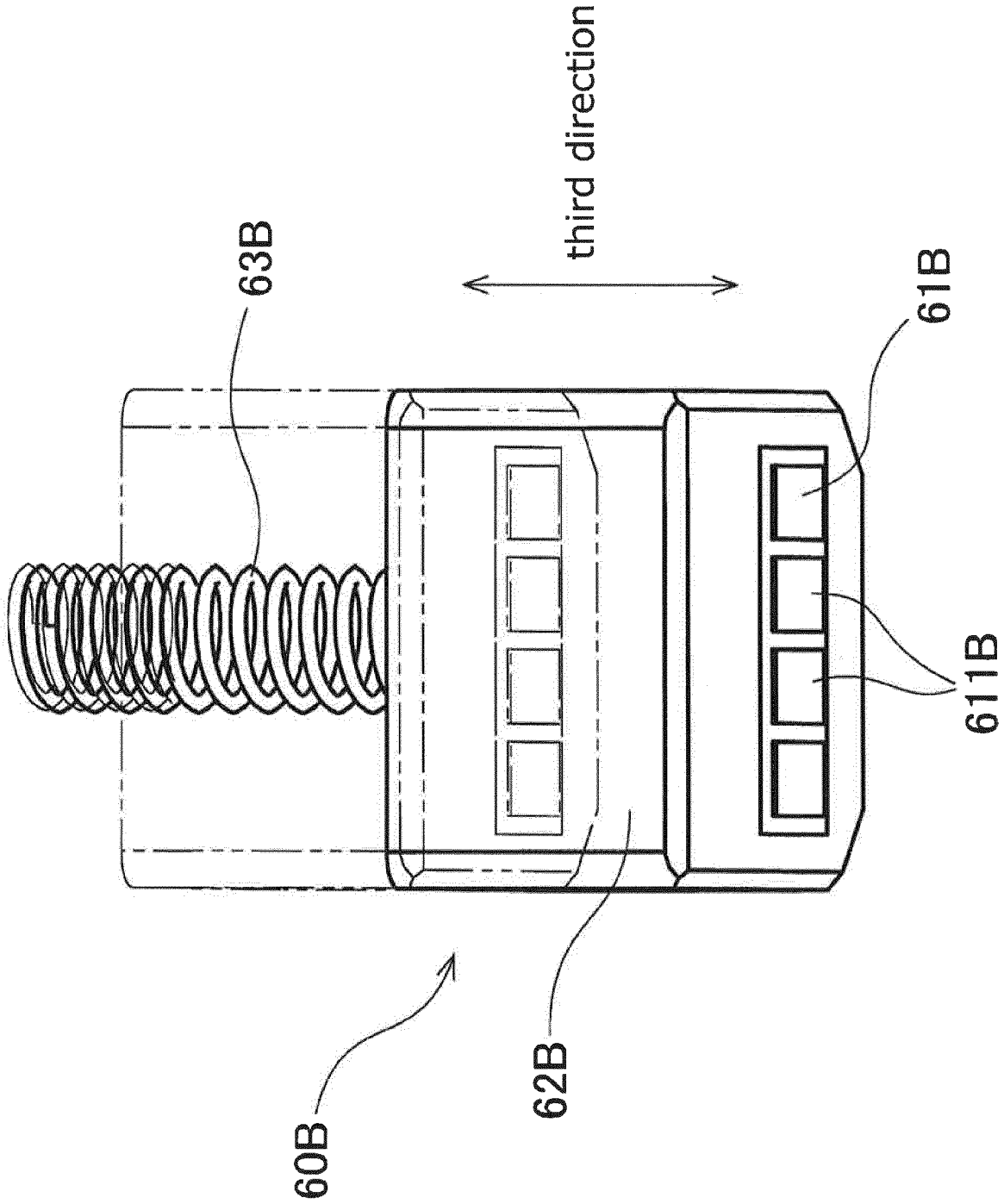

Fig.19

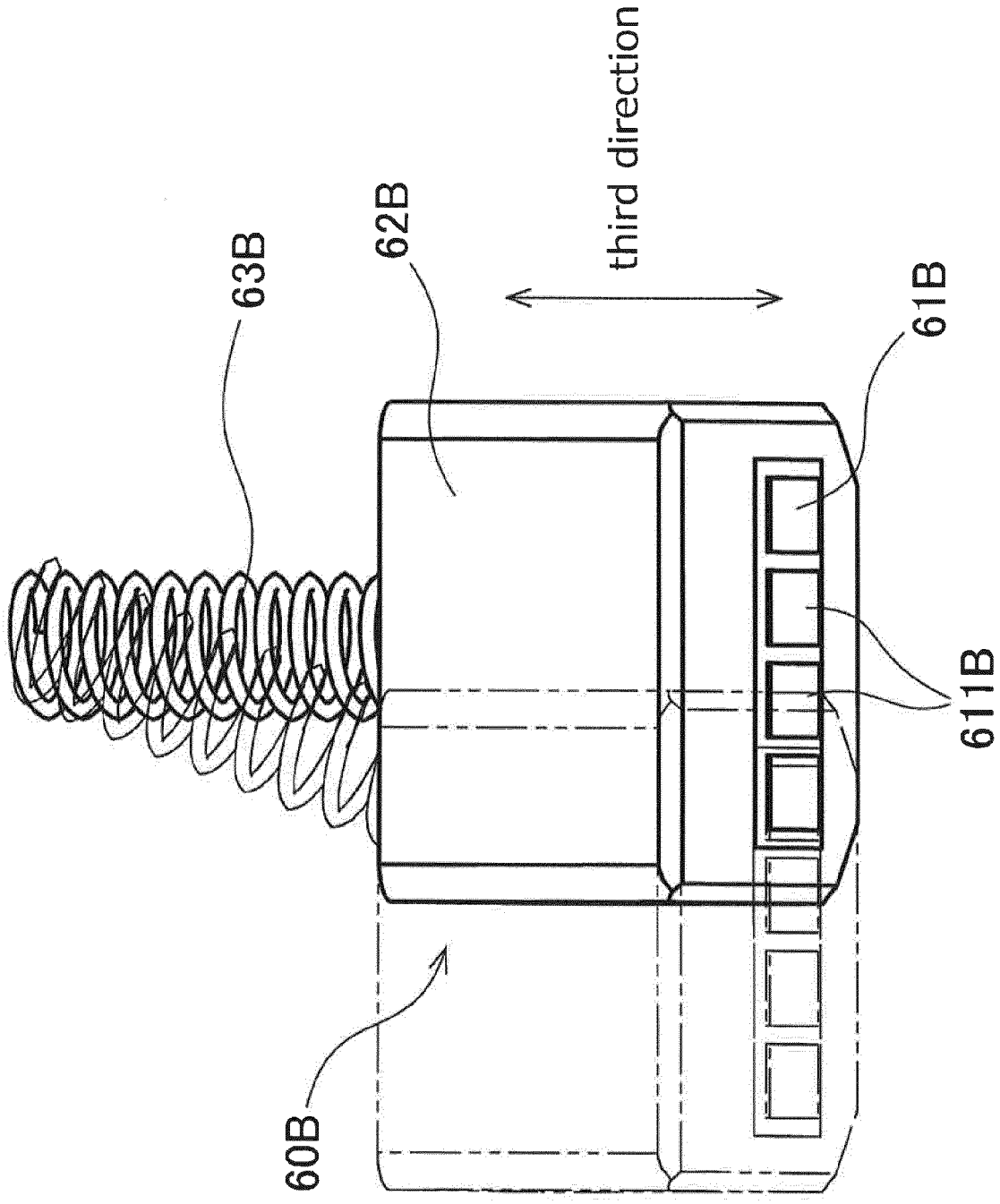

Fig.20

Fig.21

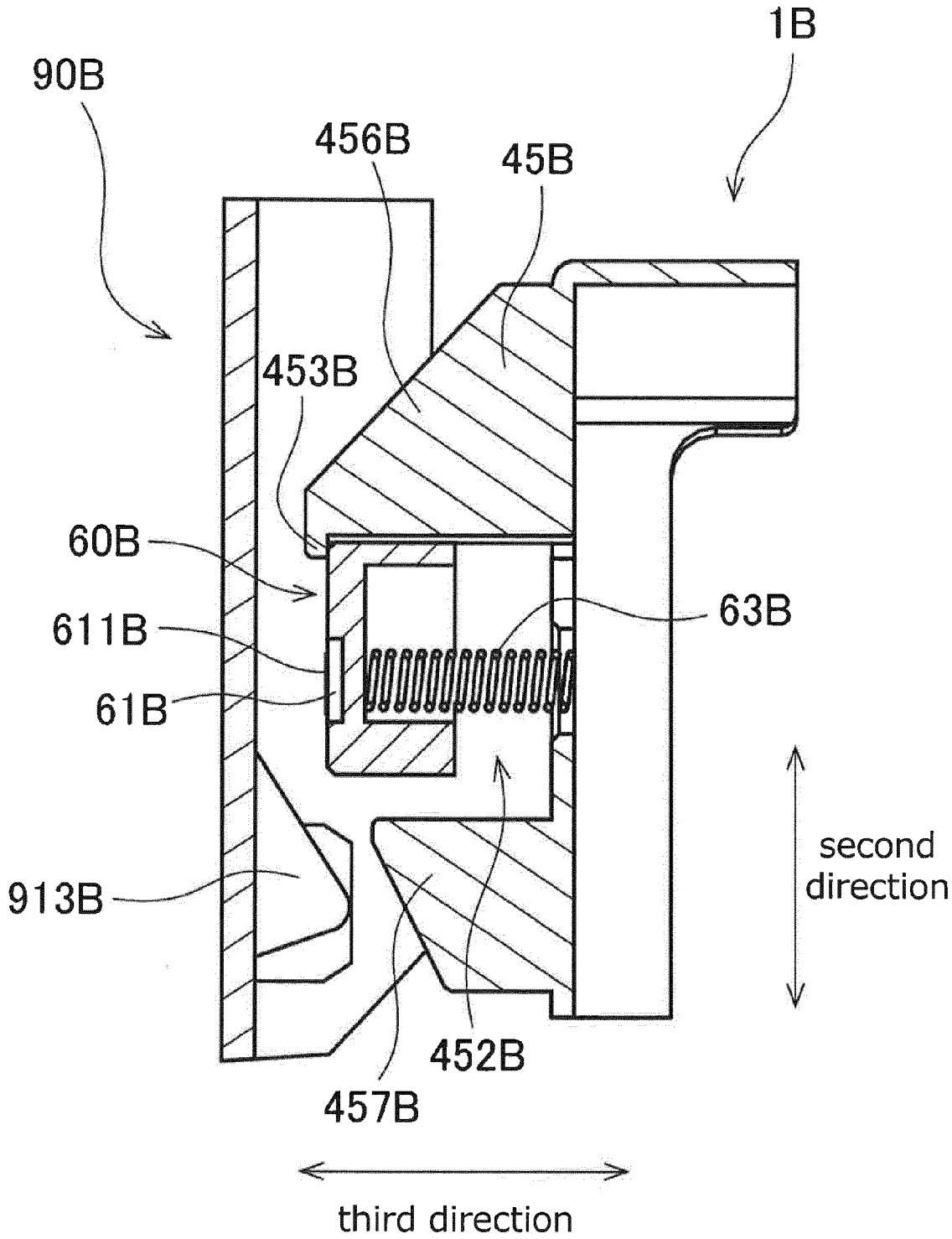
1B
90B
456B
45B
453B
60B
611B
61B
63B
913B
second direction
452B
457B
third direction

Fig.22

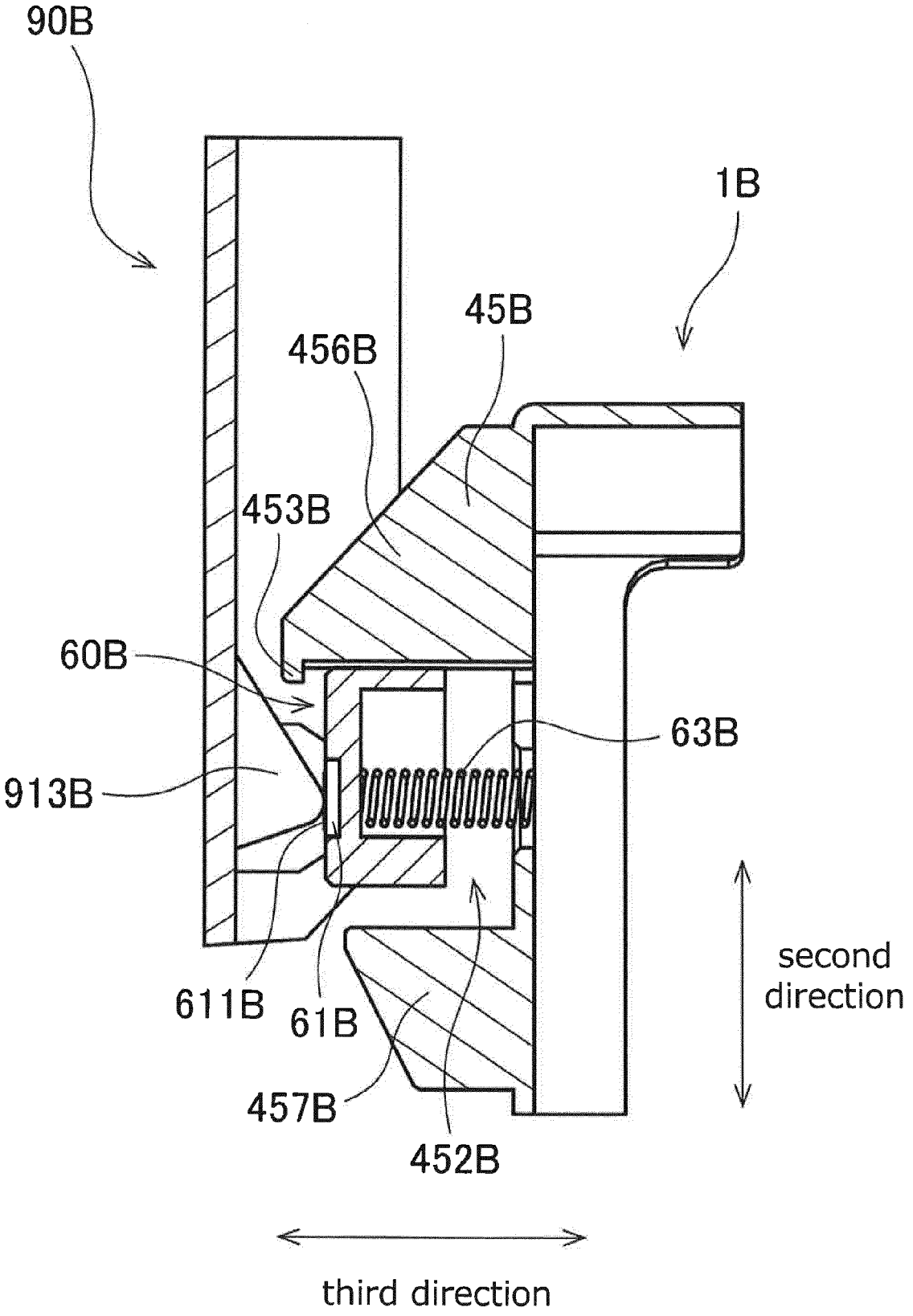
90B
1B
45B
456B
453B
60B
63B
913B
611B
61B
457B
452B
second direction
third direction

Fig.23

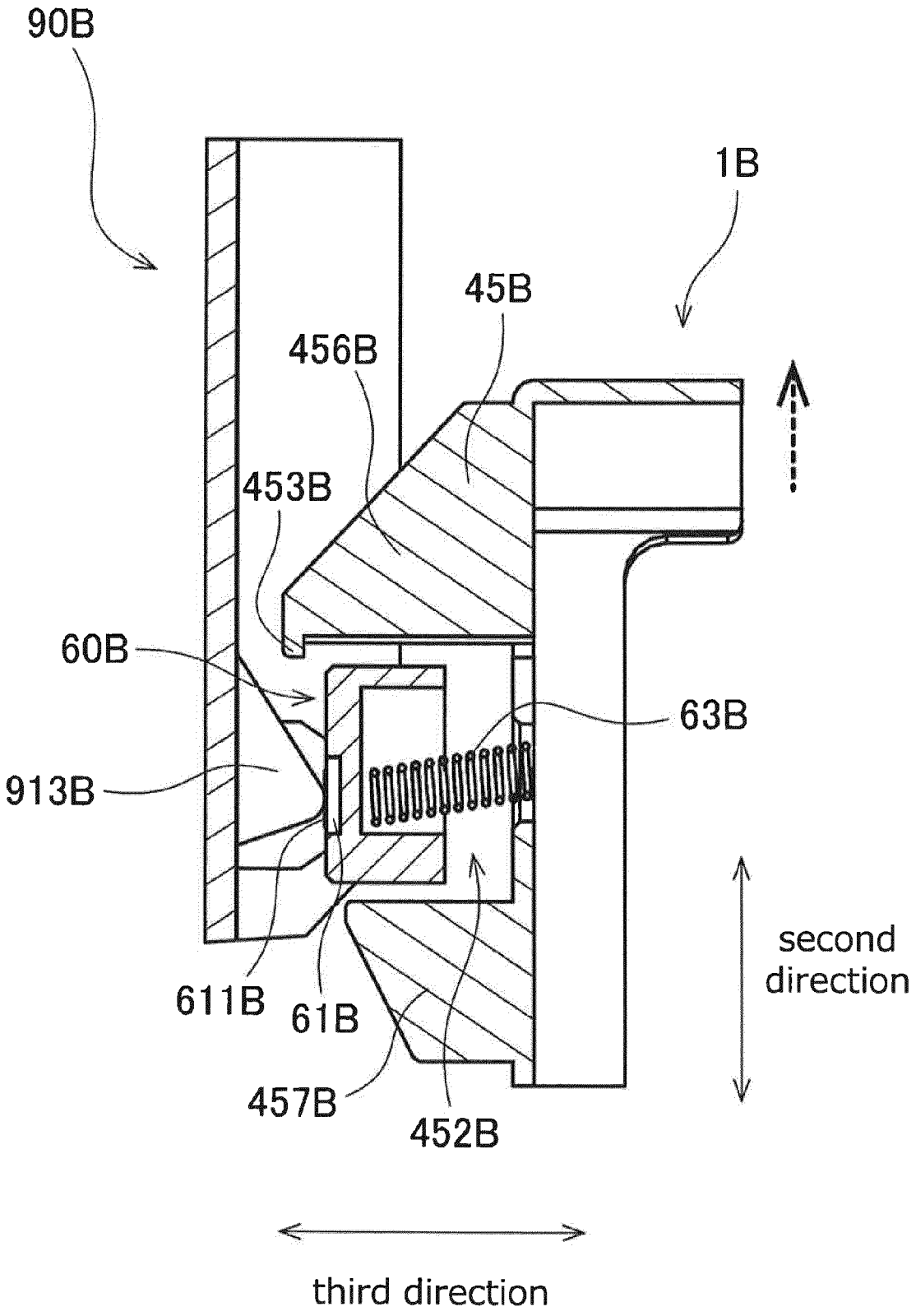
90B
1B
45B
456B
453B
60B
63B
913B
611B
61B
457B
452B
second direction
third direction

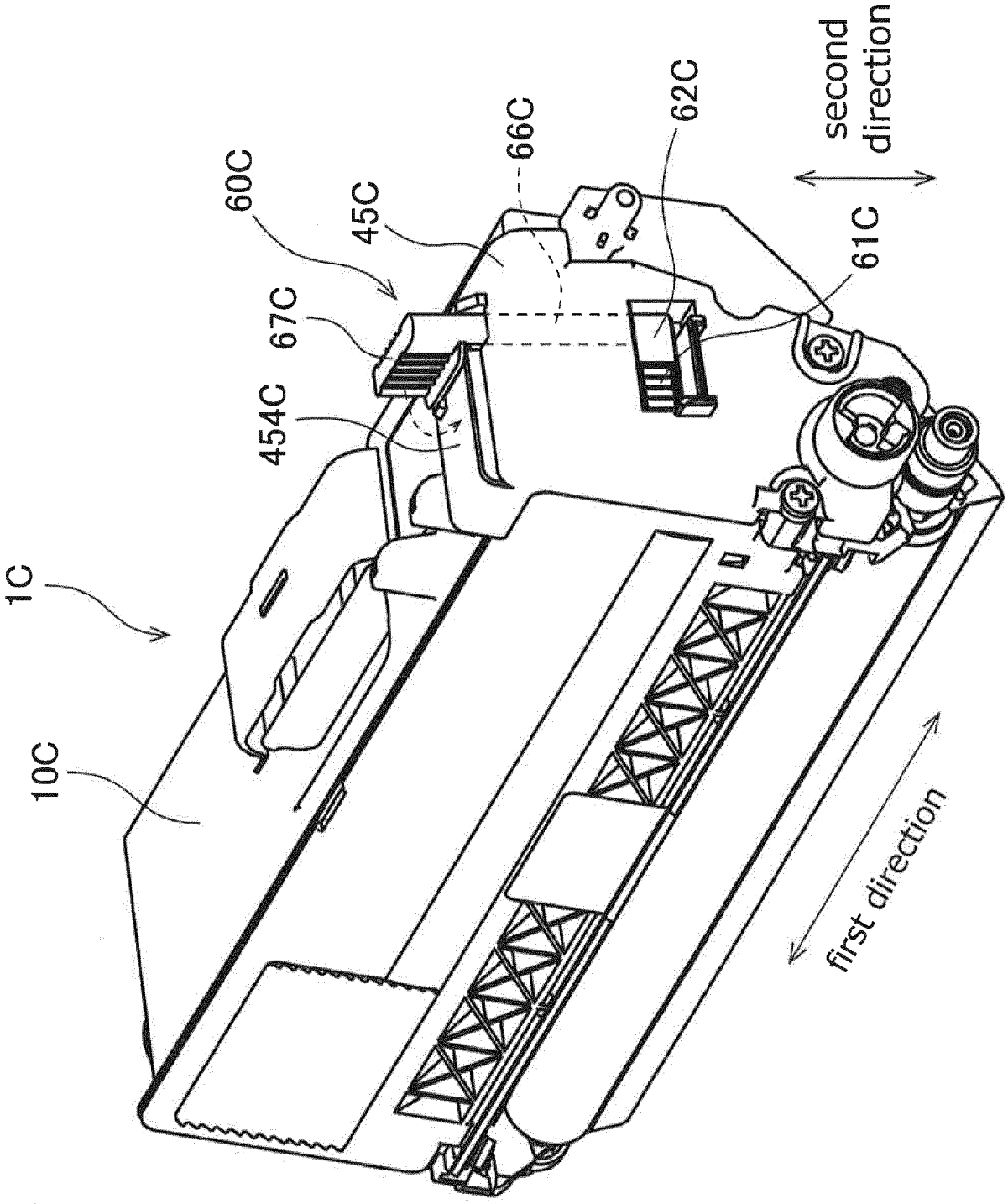
1C
10C
60C
45C
66C
62C
61C
67C
454C
second direction
first direction

Fig.24

Fig.25

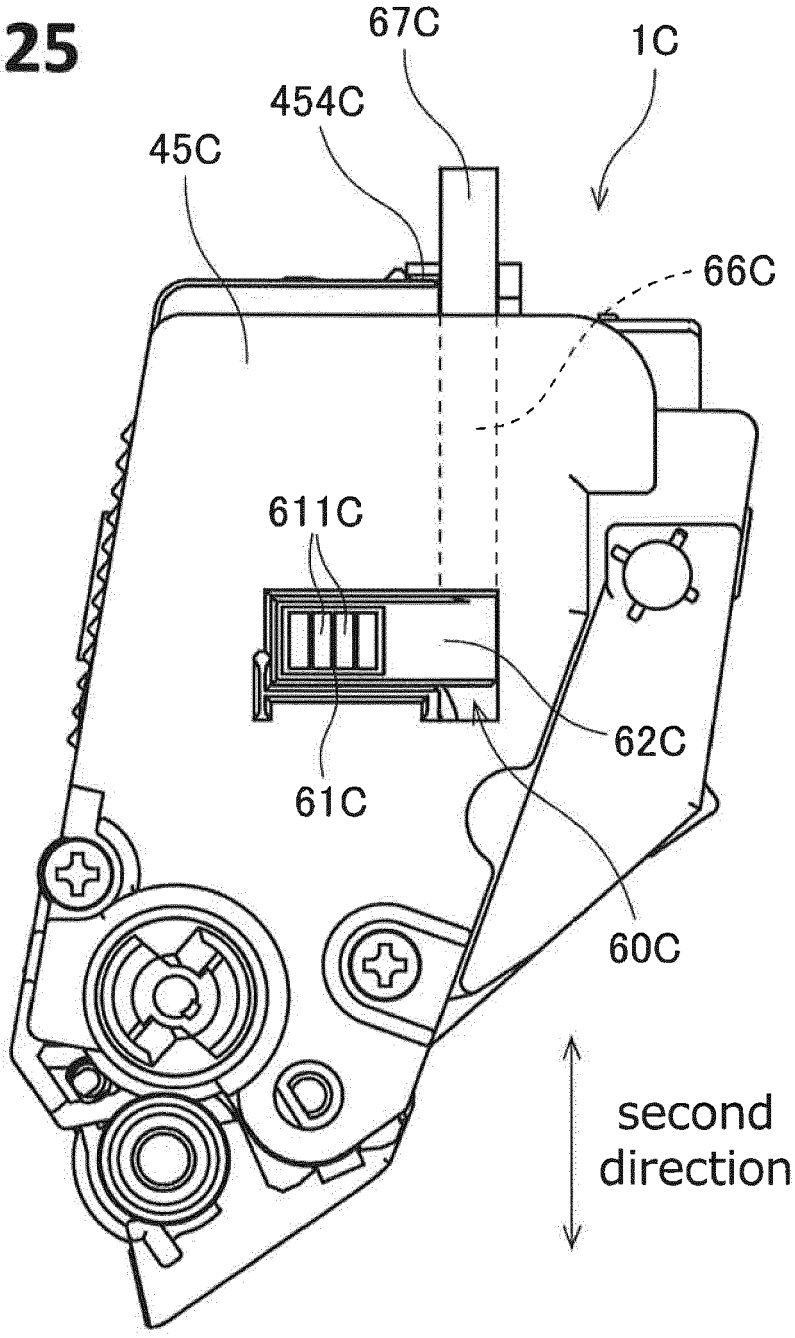

Fig.26

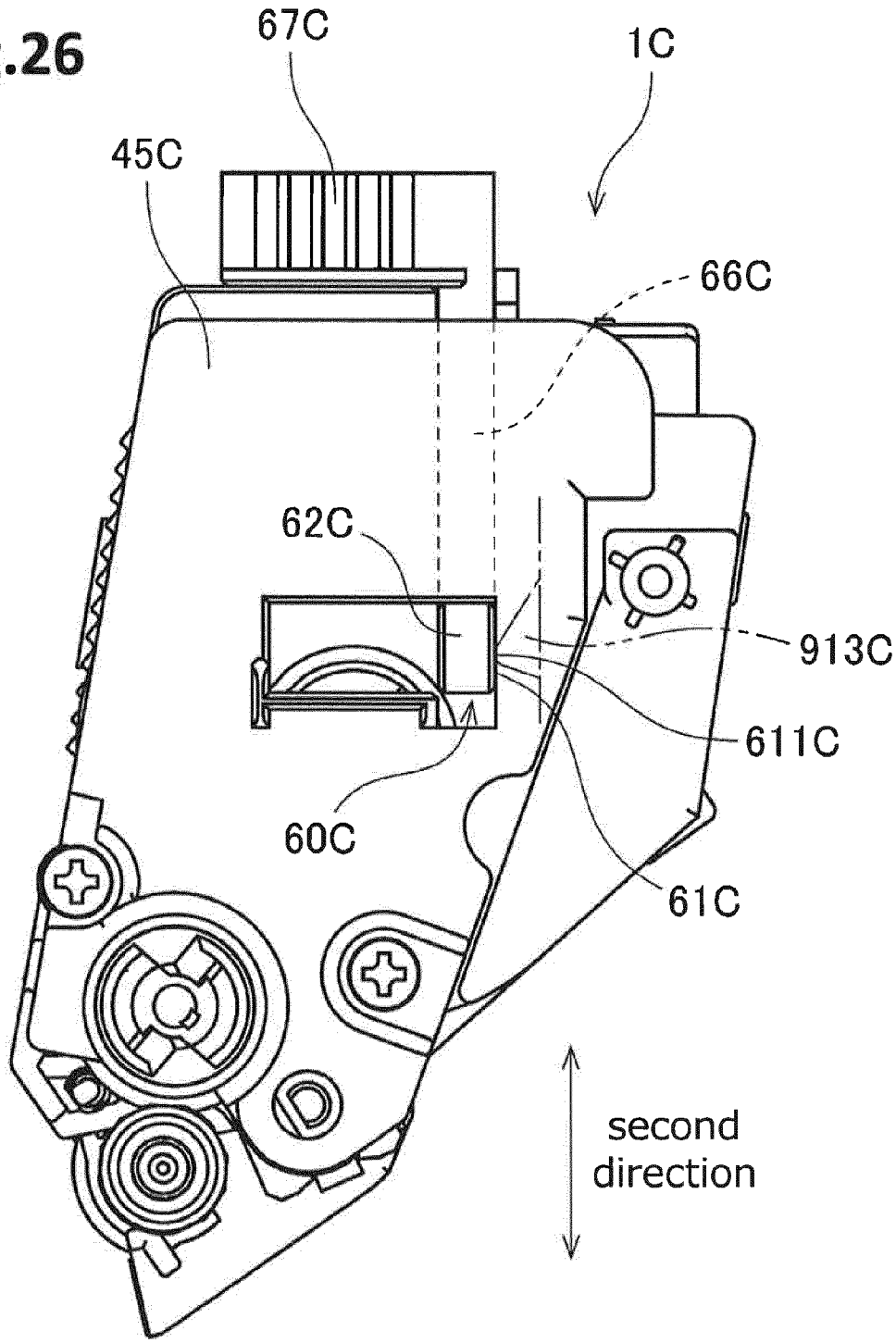

Fig.27

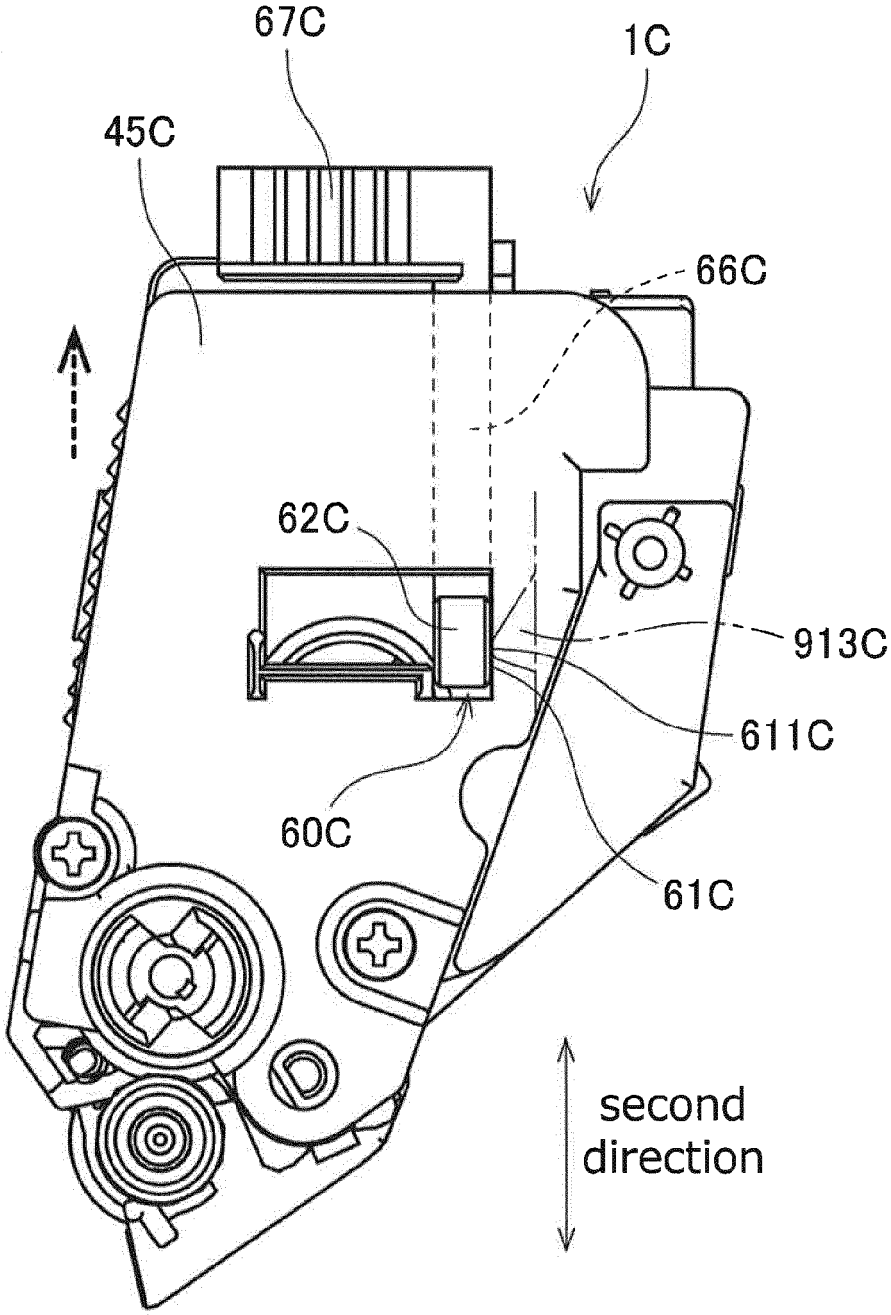

Fig.28

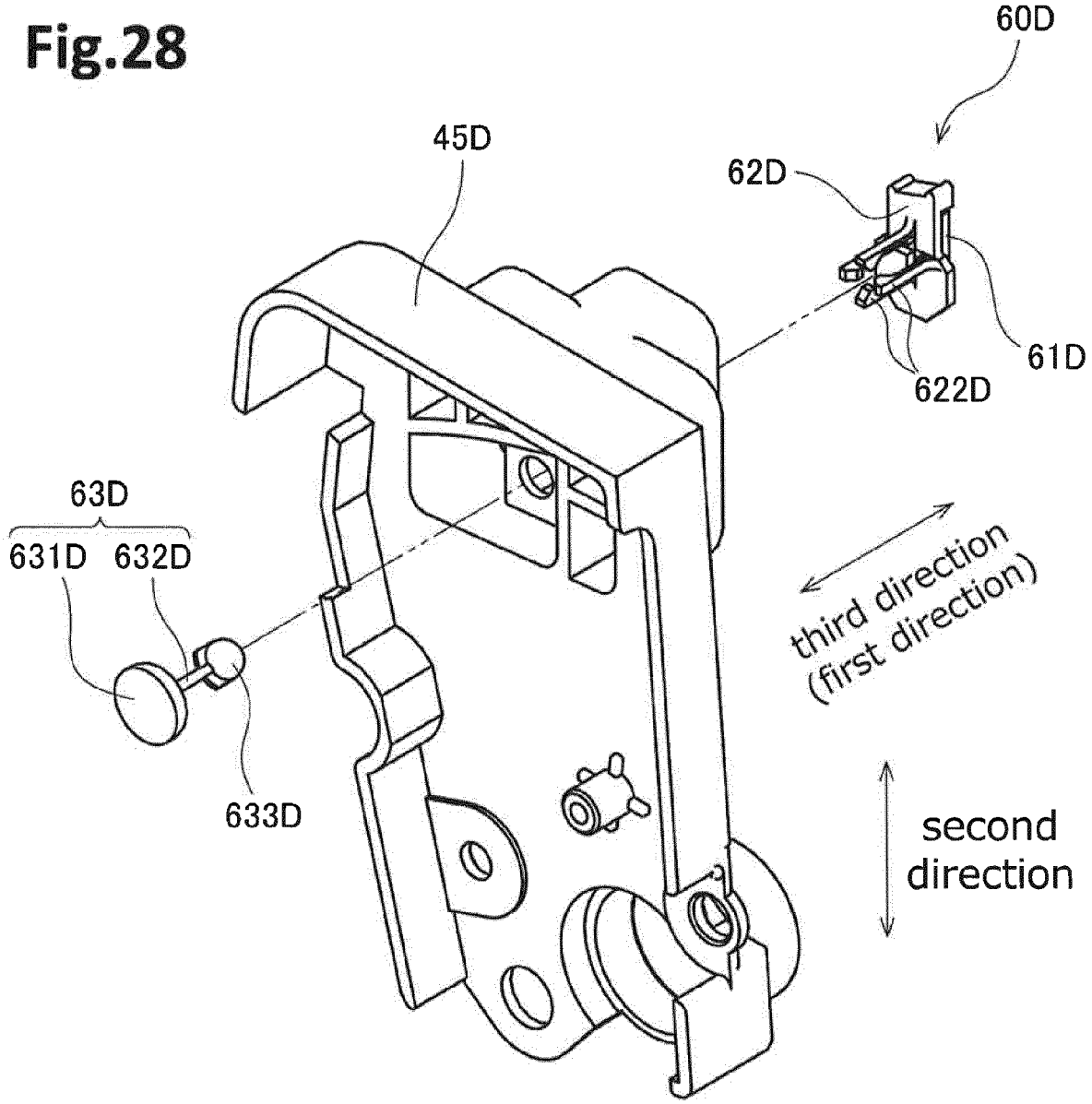
60D
45D
62D
61D
622D
63D
631D
632D
633D
third direction
(first direction)
second
direction

Fig.29

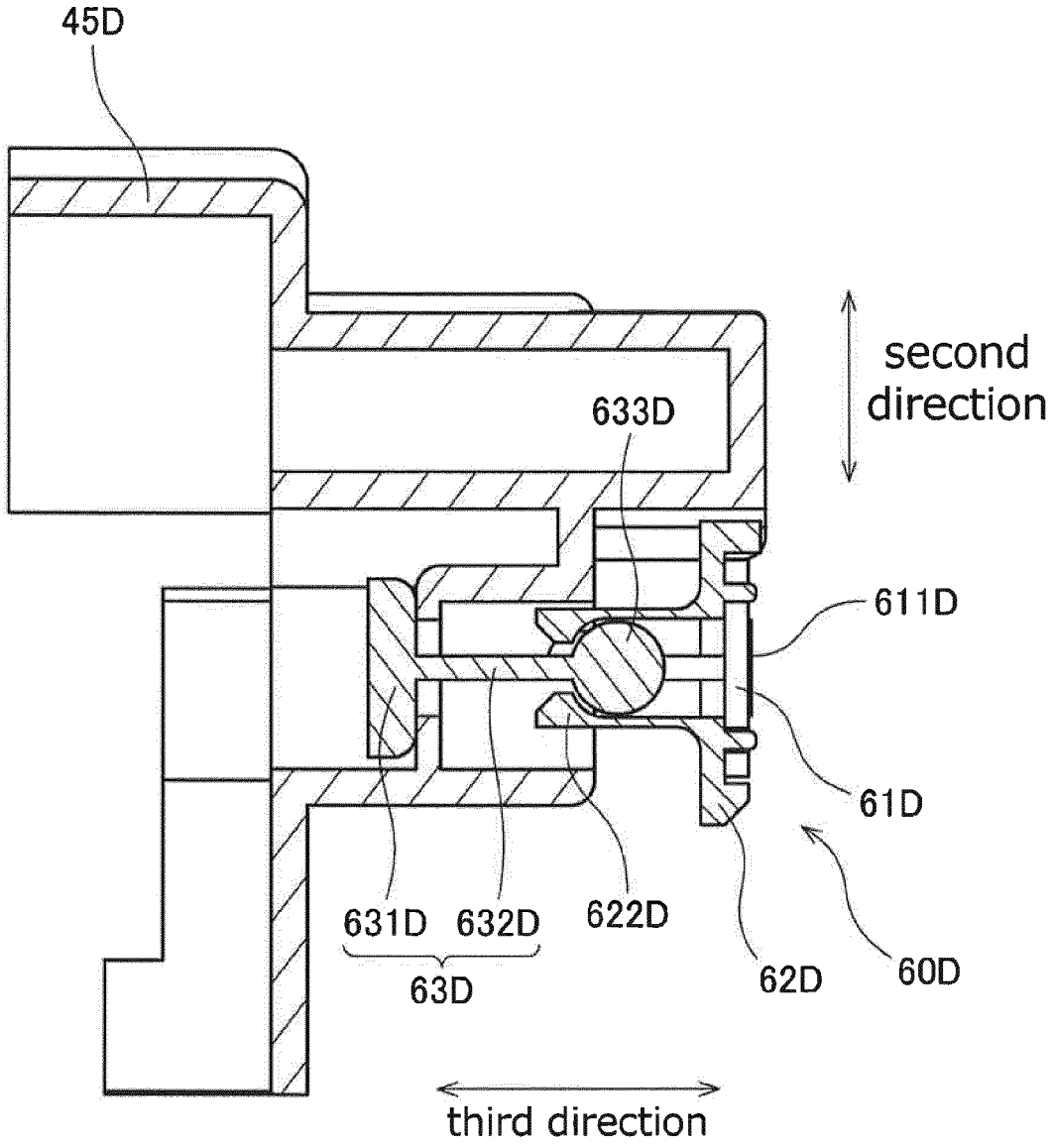
45D
second direction
633D
611D
61D
631D
632D
622D
63D
62D
60D
third direction

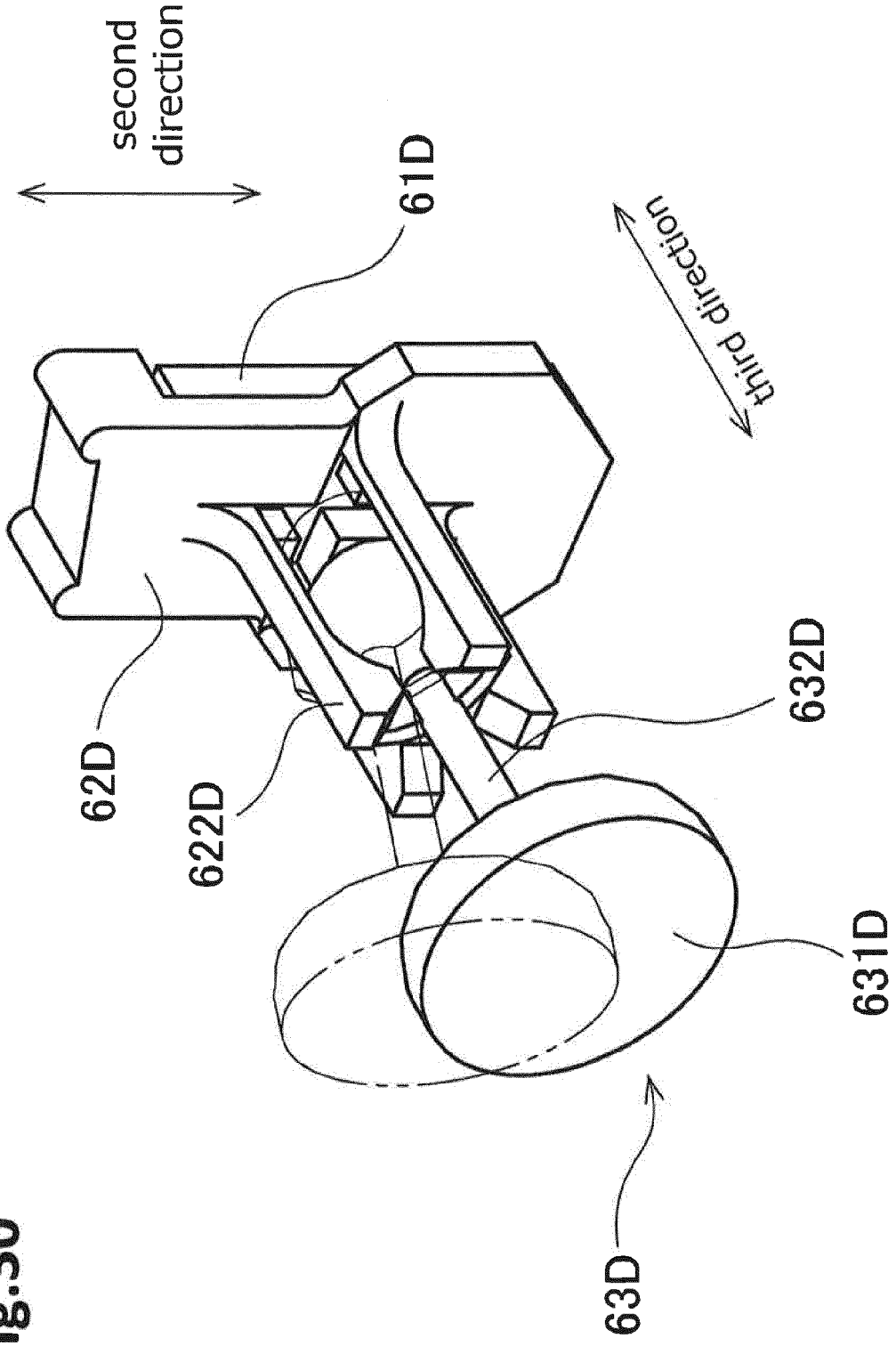
second direction
61D
third direction
62D
622D
632D
631D
63D

Fig.30

Fig.31

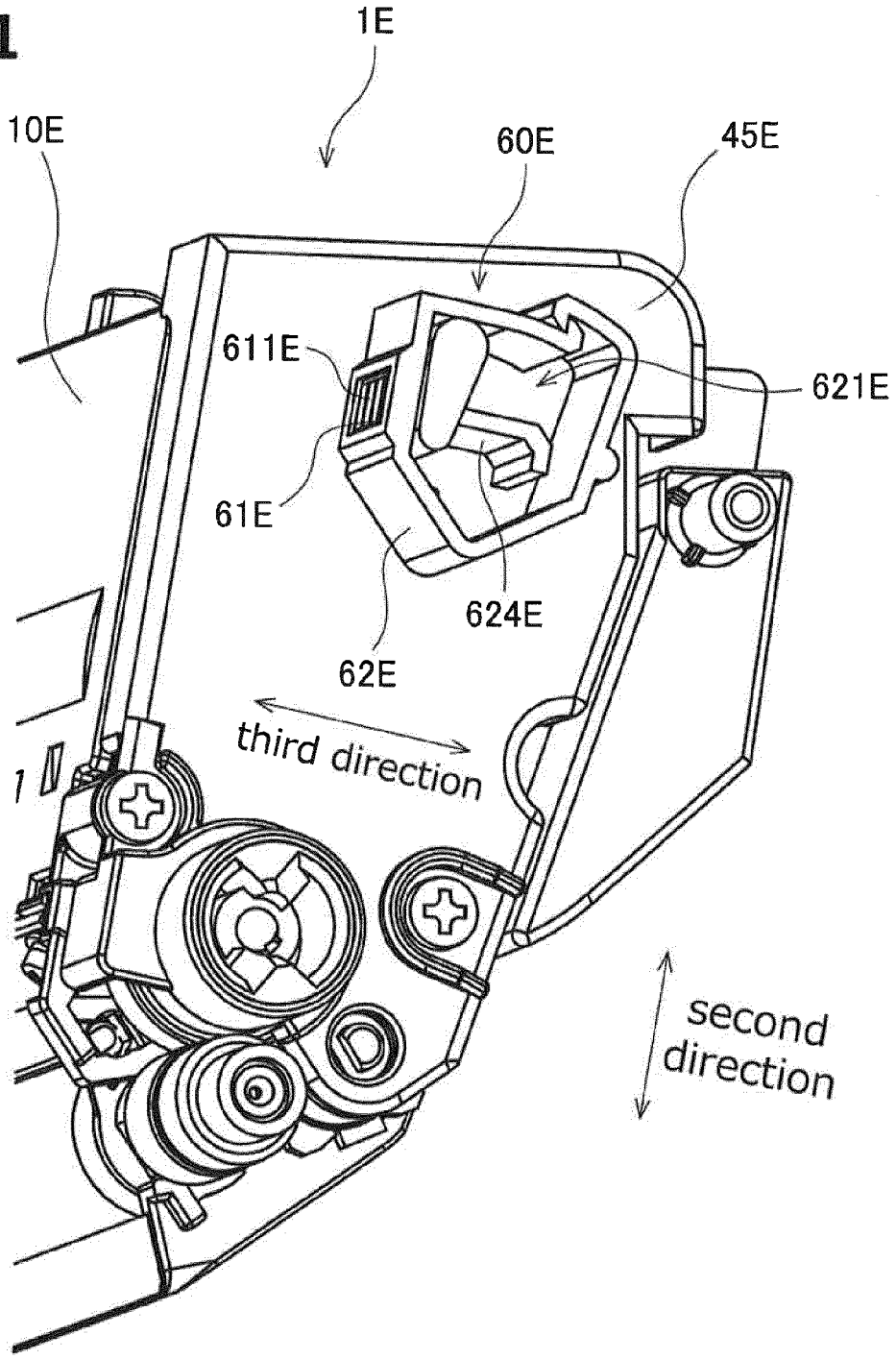
1E
10E
60E
45E
611E
621E
61E
624E
62E
third direction
second direction

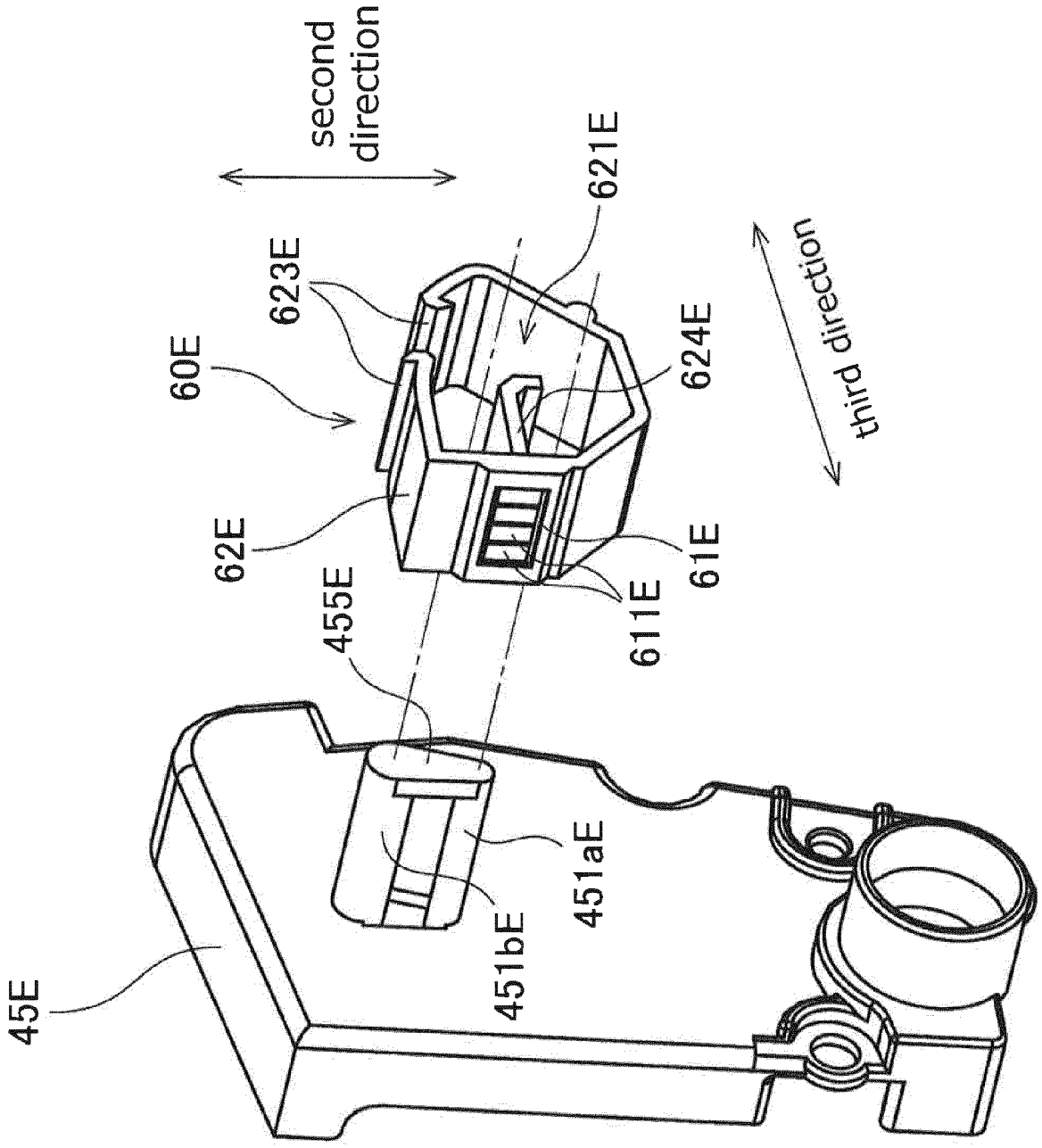
second direction
621E
623E
60E
624E
third direction
62E
61E
611E
455E
451aE
451bE
45E

Fig.32

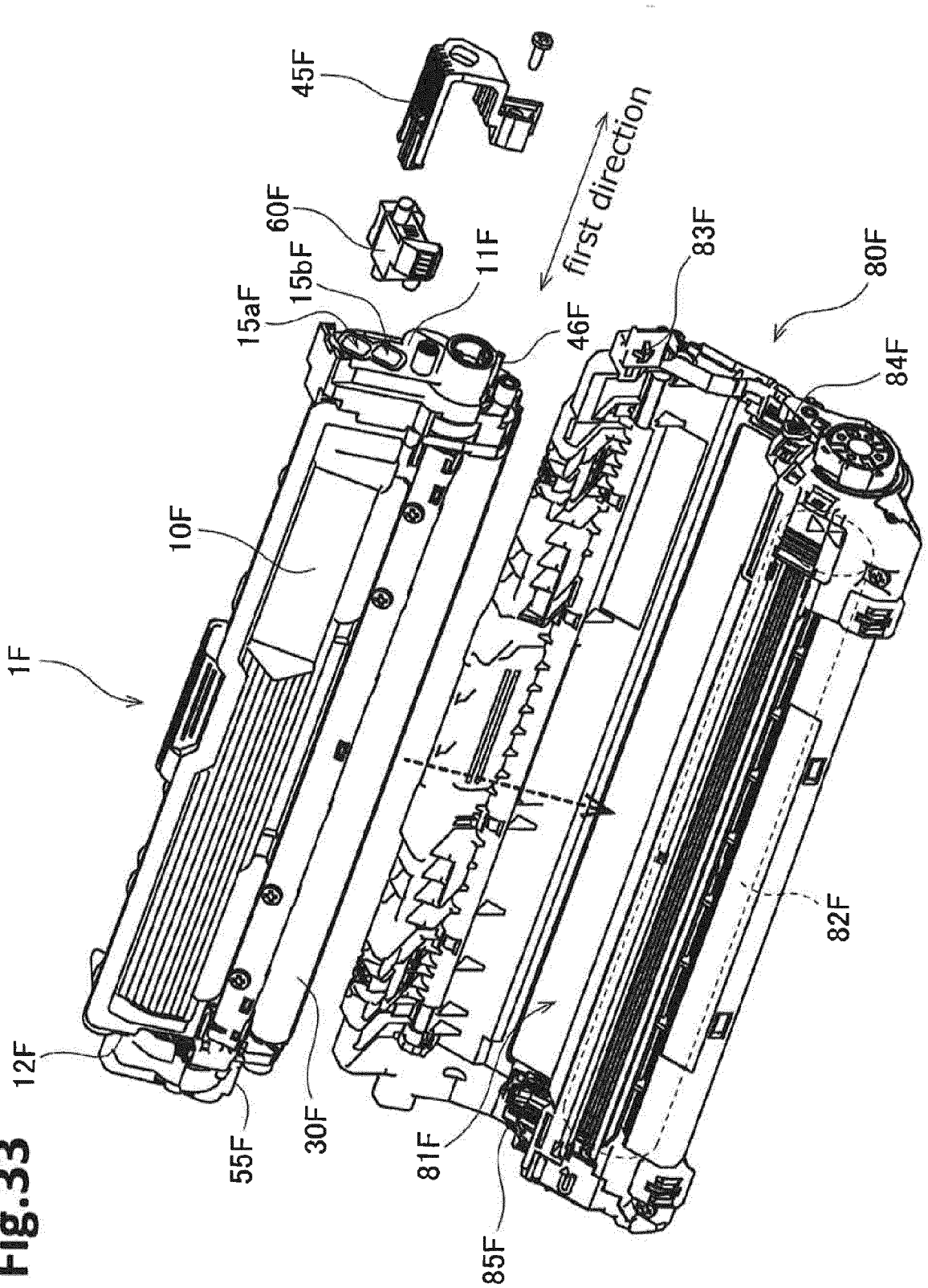
45F
60F
15bF
15aF
11F
first direction
83F
80F
46F
84F
10F
1F
82F
12F
55F
30F
81F
85F

Fig.33

Fig.34

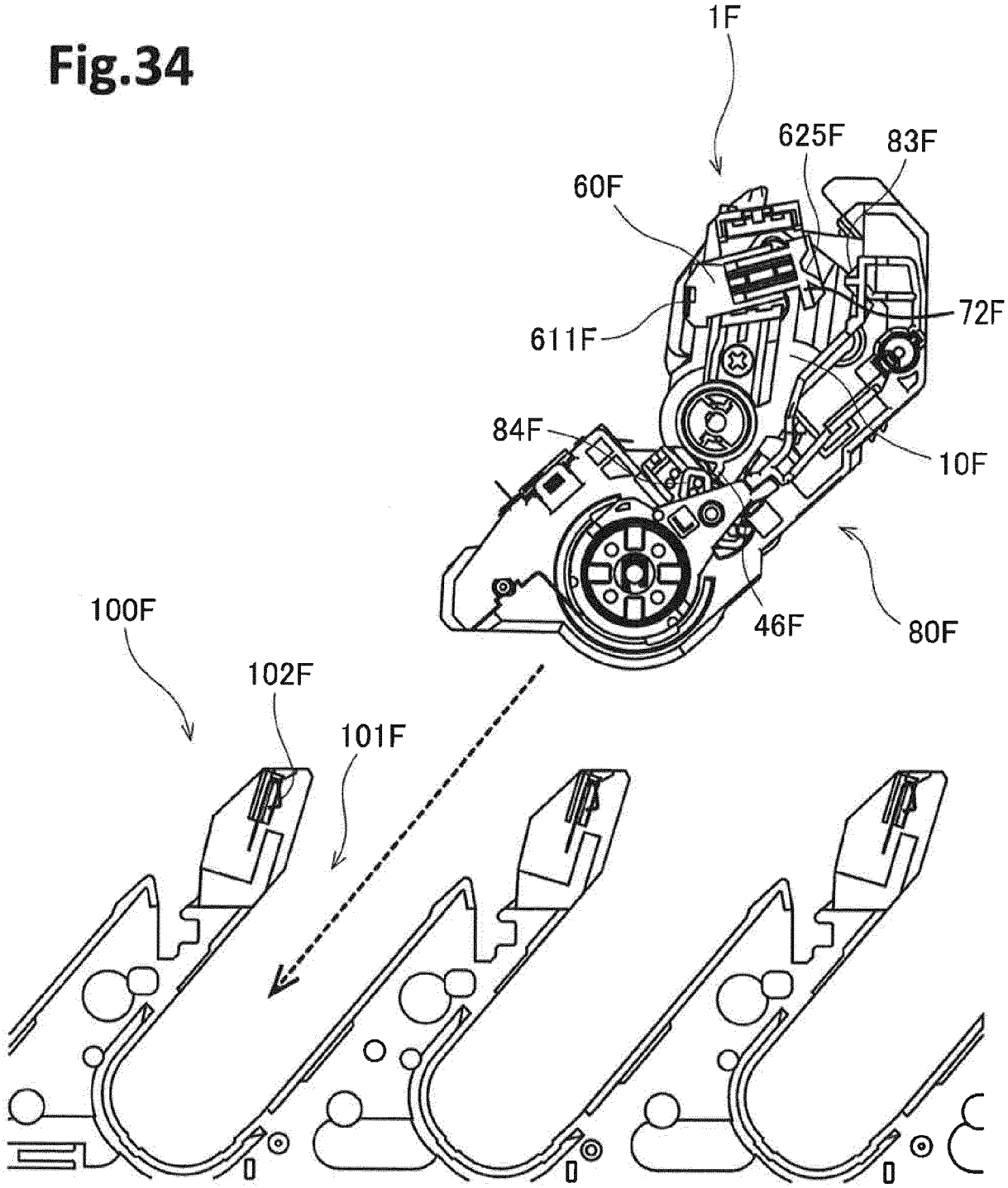

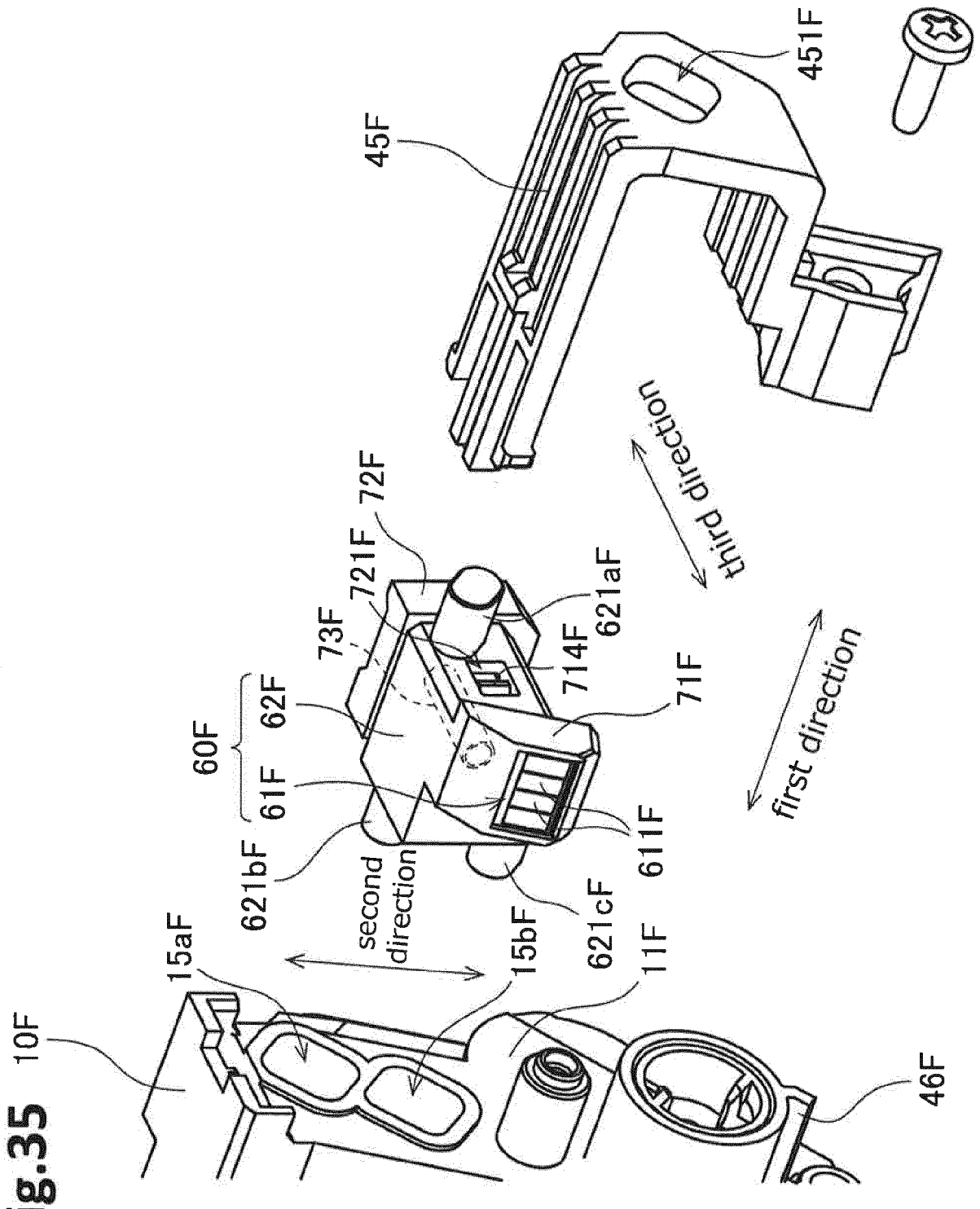
10F
15aF
60F
62F
61F
621bF
second direction
15bF
621cF
11F
611F
73F
721F
72F
714F
621aF
71F
45F
451F
third direction
first direction
46F

Fig.35

Fig.36

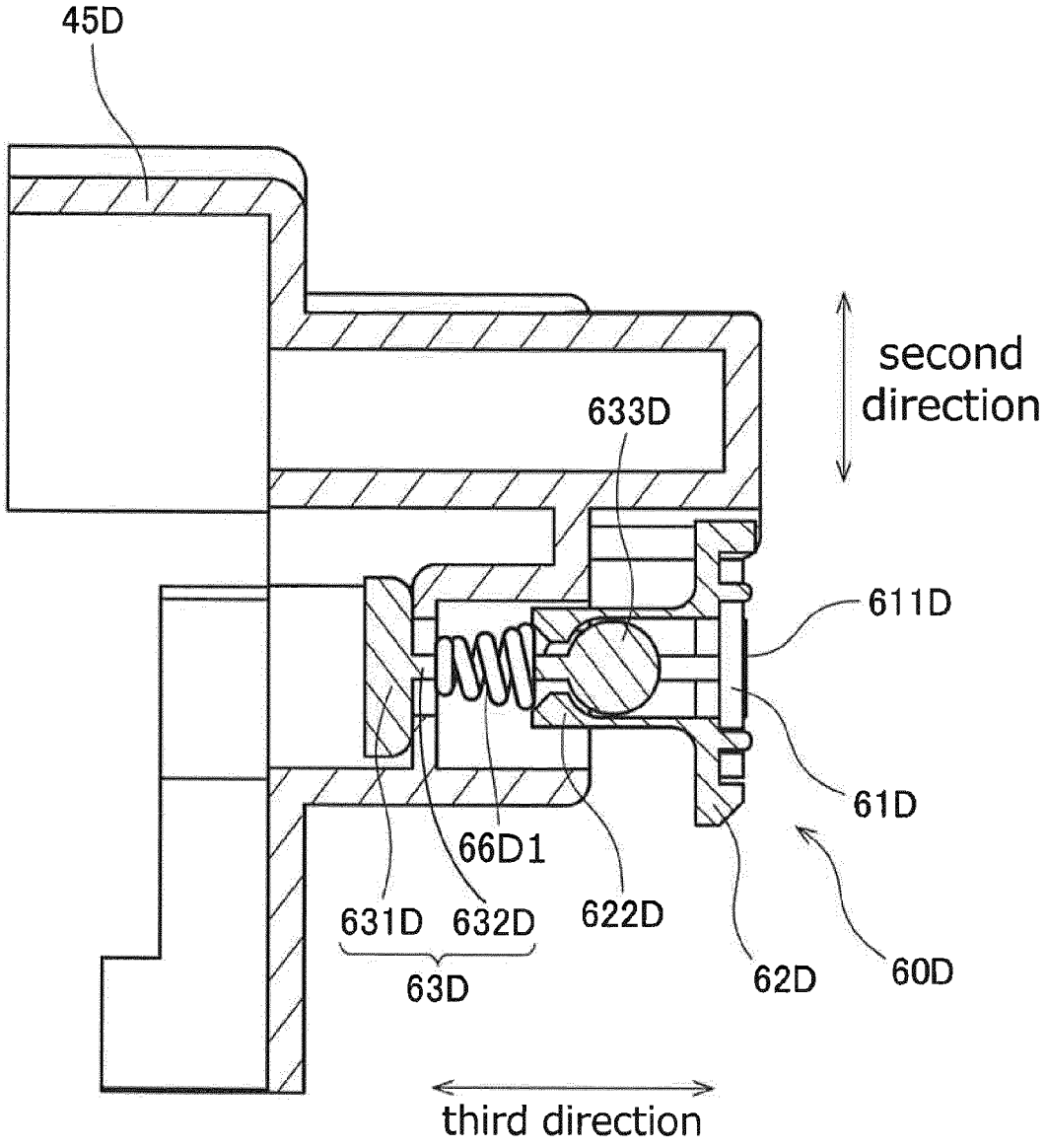
45D
second direction
633D
611D
61D
66D1
631D
632D
622D
63D
62D
60D
third direction

Fig.37

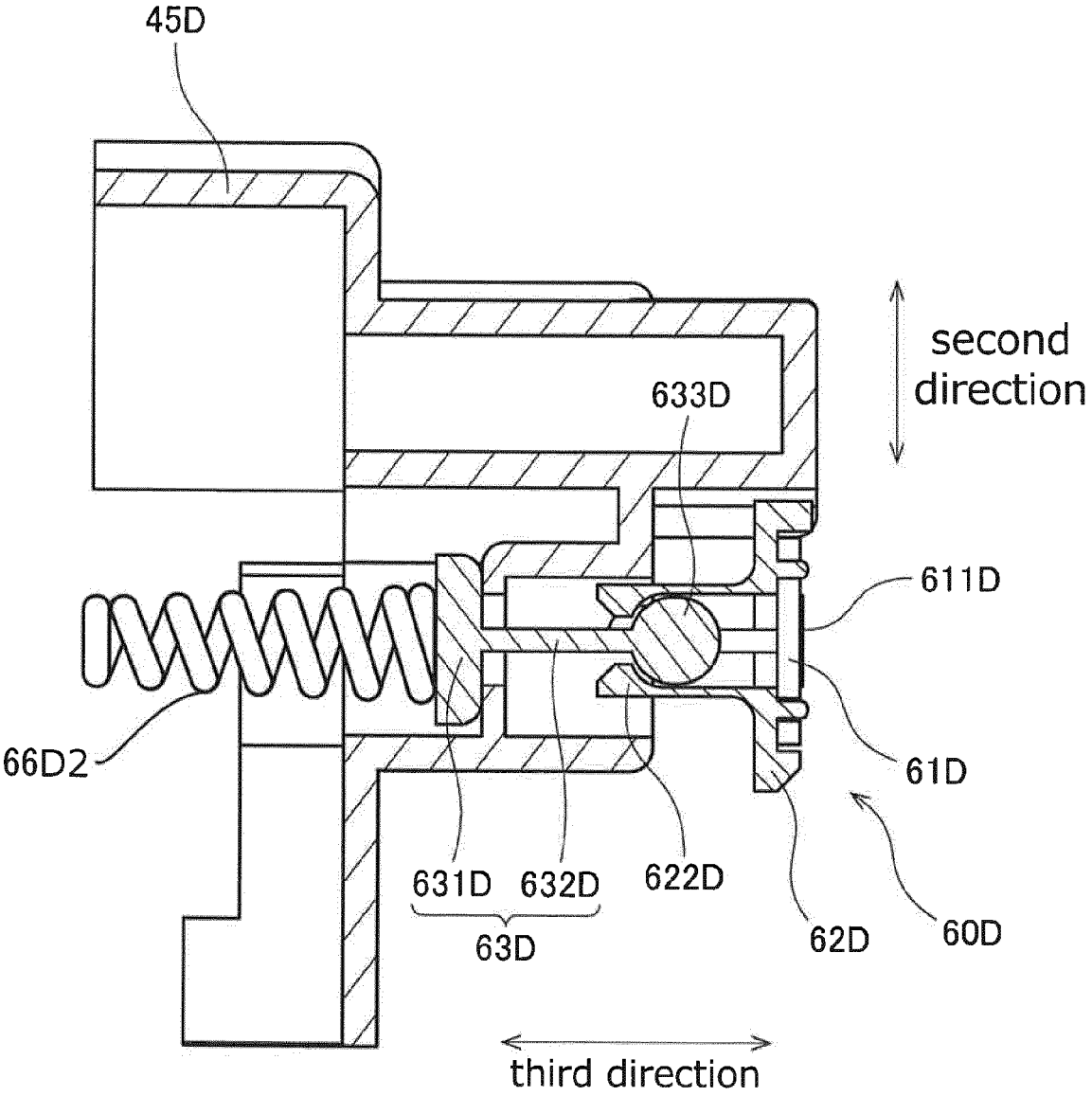
45D
second direction
633D
611D
66D2
61D
631D
632D
622D
63D
62D
60D
third direction

Europäisches Patentamt
European Patent Office
Office européen des brevets

EUROPEAN SEARCH REPORT

Application Number
EP 16 18 5118

DOCUMENTS CONSIDERED TO BE RELEVANT

Category	Citation of document with indication, where appropriate, of relevant passages	Relevant to claim	CLASSIFICATION OF THE APPLICATION (IPC)
X	US 2015/261177 A1 (MOON JI-WON [KR] ET AL) 17 September 2015 (2015-09-17) * paragraphs [0056], [0059], [0060], [0068]; figures 1,6,7 * -----	1-15	INV. G03G21/16

TECHNICAL FIELDS SEARCHED (IPC)

G03G

The present search report has been drawn up for all claims

Place of search	Date of completion of the search	Examiner
Munich	1 February 2017	Mandreoli, Lorenzo

CATEGORY OF CITED DOCUMENTS

X : particularly relevant if taken alone
Y : particularly relevant if combined with another document of the same category
A : technological background
O : non-written disclosure
P : intermediate document

T : theory or principle underlying the invention
E : earlier patent document, but published on, or after the filing date
D : document cited in the application
L : document cited for other reasons
.....
& : member of the same patent family, corresponding document

EPO FORM 1503 03.82 (P04C01)

ANNEX TO THE EUROPEAN SEARCH REPORT ON EUROPEAN PATENT APPLICATION NO. EP 16 18 5118

This annex lists the patent family members relating to the patent documents cited in the above-mentioned European search report.
The members are as contained in the European Patent Office EDP file on
The European Patent Office is in no way liable for these particulars which are merely given for the purpose of information.

01-02-2017

Patent document cited in search report	Publication date	Patent family member(s)	Publication date
US 2015261177 A1	17-09-2015	CN 106062641 A	26-10-2016
		EP 3060962 A1	31-08-2016
		KR 20150106729 A	22-09-2015
		US 2015261177 A1	17-09-2015
		WO 2015137589 A1	17-09-2015

EPO FORM P0459

For more details about this annex : see Official Journal of the European Patent Office, No. 12/82

REFERENCES CITED IN THE DESCRIPTION

This list of references cited by the applicant is for the reader's convenience only. It does not form part of the European patent document. Even though great care has been taken in compiling the references, errors or omissions cannot be excluded and the EPO disclaims all liability in this regard.

Patent documents cited in the description

- JP 2011059510 A **[0006]**
- JP 2013054058 A **[0006]**