Nov. 26, 1946. J. T. MILLER 2,411,691

GLASS HOLDING DEVICE

Filed June 22, 1944

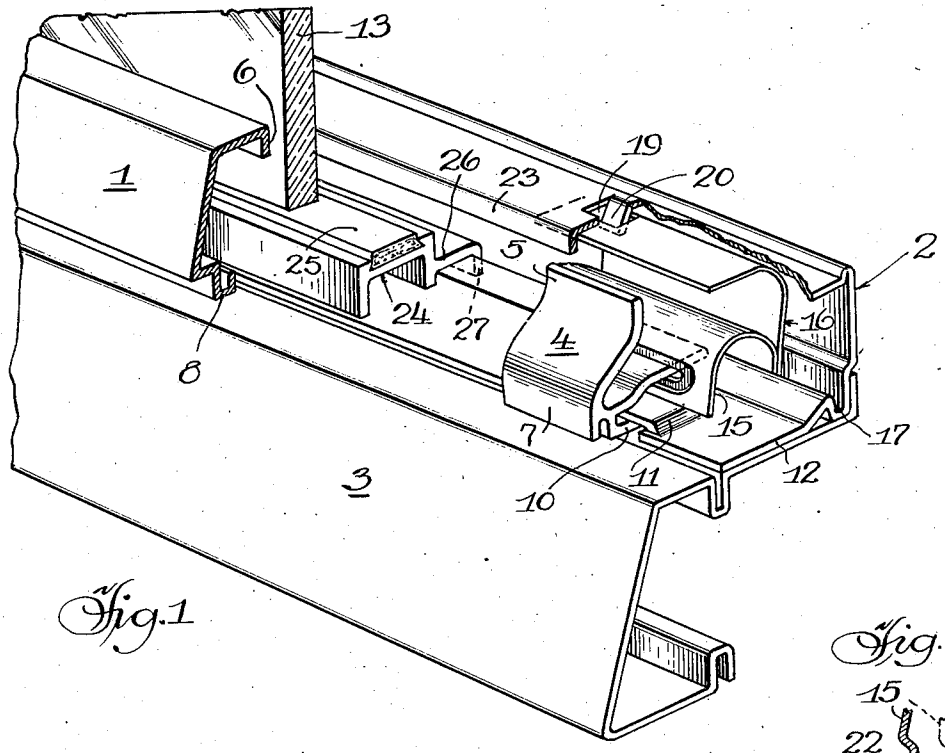

Fig. 1

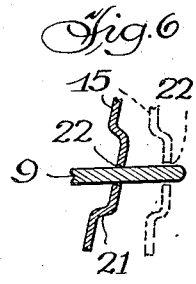

Fig. 6

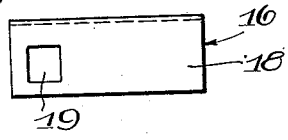

Fig. 3

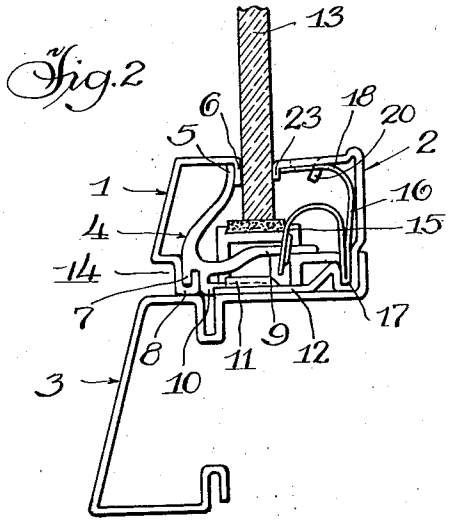

Fig. 2

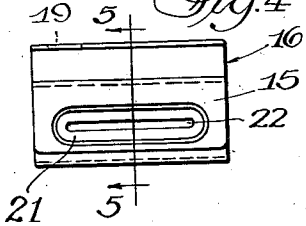

Fig. 4

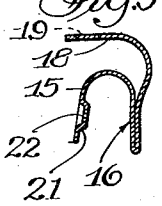

Fig. 5

INVENTOR.

James T. Miller,

BY

Parkinson & Lane

Attys.

Patented Nov. 26, 1946 2,411,691

UNITED STATES PATENT OFFICE

2,411,691

GLASS HOLDING DEVICE

James T. Miller, Niles, Mich., assignor to The Kawneer Company, Niles, Mich., a corporation of Michigan

Application June 22, 1944, Serial No. 541,594

4 Claims. (Cl. 20—56.4)

1

The present invention relates to a glass holding device especially adapted for mounting and retaining a pane of glass within a window opening or store front.

It is an important object of the present invention to provide a novel means and manner of mounting a pane of glass in which a spring clip is adapted to automatically grip and resiliently retain the face moulding of a sash assembly in anchored, glass holding relation.

A further object of the present invention is to provide a novel glass holding device provided with spaced lugs of extruded or rigid construction carried in the face moulding of a sash assembly, and aligned resilient clips anchored in the gutter and so constructed and arranged as to receive a projection on the lugs and automatically interlock therewith to firmly but yieldably retain a pane of glass between the face moulding and gutter.

Another object of the present invention is to provide a novel clip construction having a resilient part with an elongated slot so positioned and arranged as to receive and automatically grip a projection carried by the face moulding of a sash assembly and lock this moulding in contact with a pane of glass held between it and an inner sash member.

Further objects are to provide a construction of maximum simplicity, efficiency, economy and ease of assembly and operation, and such further objects, advantages and capabilities as will later more fully appear and are inherently possessed thereby.

The invention further resides in the construction, combination and arrangement of parts illustrated in the accompanying drawing, and while there is shown therein a preferred embodiment, it is to be understood that the same is susceptible of modification and change, and comprehends other details, arrangements of parts, features and constructions without departing from the spirit of the invention.

In the drawing:

Figure 1 is a fragmentary view in perspective of the novel glass holding device.

Figure 2 is a view in end elevation of the novel assembly.

Figure 3 is a top plan view of a novel spring clip for anchoring and retaining the face moulding or outer sash member in assembled relation.

Figure 4 is a view in front elevation of the resilient clip.

Figure 5 is a view in vertical cross section of the clip taken on the line 5—5 of Figure 4, and Figure 6 is a fragmentary enlarged view showing the spring action and locking engagement of the clip.

2

Referring more particularly to the drawing and the illustrative embodiment of the invention as therein disclosed, the glass holding device or assembly comprises a face moulding or outer sash member 1 and a gutter or inner sash member 2 mounted upon an encompassing jamb 3. Inserted within the face member 1 at suitably spaced intervals are extruded lugs 4 having an end 5 abutting against the in-turned flange or lip 6 of the moulding, a leg 7 staked within the lower or longitudinally extending groove 8 to prevent slipping and to hold accurate spacing of the lug and thereby interlocking its top and bottom to the face moulding, a rearwardly extending and substantially horizontal protruding leg 9 and a foot member 10 adapted to be inserted into an embossed loop 11 provided in the base 12 of the gutter.

The purpose of the foot 10 and loop 11 is to hold the face member down into contact with the jamb construction, it being understood that this jamb includes a bottom, top or head and side jamb sections completely framing the sash assembly and the window pane 13. By providing an offset in the outer sash or face moulding adjacent the jamb sections, there is provided a continuous, encompassing recess or channel 14 so disposed that should the outer face of the moulding 1 and jamb 3 be out of exact alignment due to any variation in glass thickness or for other reasons, such non-alignment will not be noticeable.

The substantially horizontal protruding leg 9 of each lug 4 extends back and interlocks with a substantially vertical curved leg 15 of one of a series of similarly spaced spring clips 16 inserted in the loop 17 of the gutter 2. Each clip snaps in place at the top as more clearly shown in Figure 2. The top leg 18 of this clip is provided with a notch 19 which straddles a tab 20 sheared down from the top of the gutter in such manner that the tab locks and spaces the spring clip, and the top leg 18 and gutter are each provided with a slot or opening for the insertion of a screw driver, tool or other instrument for releasing the lugs when it is desired to remove or replace the glass 13 or face moulding 1.

The substantially vertical curved leg 15 of the spring clip is embossed at 21 to provide an elongated slot 22 for the reception of the leg 9 of the lug 4. By pushing the moulding 1 carrying the lugs 4 inwardly, the leg 9 of each lug will en-

gage the spring leg 15 of its aligned spring clip 16, causing these resilient legs to be moved or bent into a substantially perpendicular position in which the legs 15 are directed to and enter the slots 22. The spring action of the clips will then force the legs 15 forwardly to an inclined or angular position as shown in Figures 2, 5 and 6, resulting in these slots or openings 22 and the flat areas adjacent thereto returning to an angular position and thereby gripping the legs 9 and retaining the face moulding and its lugs in assembled relation in which the pane of glass 13 is firmly yet yieldably held between the flange or lip 6 on the face moulding 1 and the downwardly or inwardly extending flange 23 in the gutter section 2.

The glass is shown mounted on a setting block 24 having a dove-tailed groove at its top into which is inserted a cushion 25 for the glass to rest upon. Projecting from the back of this setting block is a flange 26 with a turned down leg 27 which fits into the groove 17 of the gutter. When installed, this flange locates the setting block centrally under the glass 13 and prevents it from tipping over or sliding out of position.

When it is desired to disassemble the face moulding and lugs from the glass, all that is required is to insert a tool or other instrument through the notch or opening 19 and the aligned opening in the top of the gutter, and forcing the leg 15 of the spring clips back into a substantially perpendicular position, thereby releasing the face moulding and allowing it to be readily removed. The novel spring clip and lug assembly is so constructed and arranged as to allow for a considerable variation in glass thickness from the usual quarter-inch plate.

Having thus disclosed my invention, I claim:

1. A glass holding device for a window, store front and the like, comprising an outer and an inner sash member with the outer member adjustable with respect to the inner member, lugs secured within the outer member in spaced relation and similarly spaced spring clips mounted in the inner member, a substantially horizontal and rearwardly projecting leg provided on each lug and a resilient projection on each spring clip normally inclined downwardly and toward the leg and provided with an elongated slot for receiving an end of the leg, the leg being so disposed with respect to the slot that when pressure is applied to the outer sash member to force it inwardly into contact with the glass, the end of the leg bends the resilient projection sufficiently to permit the end of the leg to enter the slot, but when pressure is released the resilient projection tends to return to its normal position and tightly grips the leg and retains the outer sash member in assembled relation.

2. A glass holding device for a window, store front and the like, comprising an adjustable face moulding and a gutter member secured within the window opening, lugs staked in spaced relation within the face moulding, spring clips mounted in spaced relation in the gutter member and in alignment with the lugs, a rearwardly projecting leg on each lug and a curved, resilient part on each spring provided with a projection normally inclined downwardly and toward the leg and having an elongated slot adapted to receive the end of the leg when the projection is bent rearwardly as the face member and lugs are moved into glass holding position and then as the projection tends to return to its original position, automatically grip and retain this face member and lugs in that position whereby to accommodate panes of glass varying in thickness.

3. A glass holding device for a window, store front and the like, comprising an outer and an inner sash member with the outer member adjustable with respect to the inner member, lugs secured within the outer member in spaced relation and similarly spaced spring clips mounted in the inner member, and interlocking parts on the lugs and clips including a leg on each lug and a resilient projection on each clip normally inclined downwardly and toward the leg and provided with an opening for receiving the end of the leg, said projection being compressed when the end of the leg is forced and directed into the opening and due to its resiliency, tightly gripping and retaining the leg, whereby when the outer sash member and the lugs carried thereby are moved into a position where the outer sash member engages the outer face of the glass with the desired pressure, the lugs are automatically and resiliently gripped by the clips and retained in such gripping relation.

4. A glass holding device for resiliently but firmly mounting a pane of plate glass in a window opening and to allow for variation in glass thickness, comprising a gutter member mounted within jamb sections framing the window opening, a face moulding removably mounted within the jamb sections for assembly, removal or replacement of the glass, lugs mounted in spaced relation within the face moulding, interengaging means on the lugs and gutter for holding the face moulding down into contact with the jamb sections, resilient members mounted in the gutter in aligned, spaced relation with the lugs, and interengaging and interlocking parts on the lugs and resilient members including a leg on each lug and a projection on each resilient member normally inclined downwardly and toward the leg having a slot adapted to receive an end of the leg when the face moulding and lugs are moved into assembled relation, but due to the resiliency of the projections the lugs are resiliently gripped and retained in that relation with the face moulding engaging the glass and combining with the gutter member to retain the glass in anchored position.

JAMES T. MILLER.