W. M. ANDERSON.

PRICE CARD HOLDER.

APPLICATION FILED AUG. 28, 1920.

1,391,090. Patented Sept. 20, 1921.

Fig. 1.

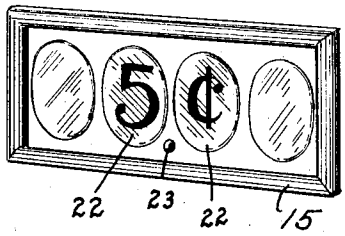

Fig. 2.

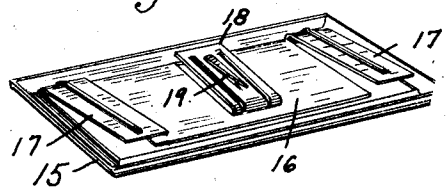

Fig. 3.

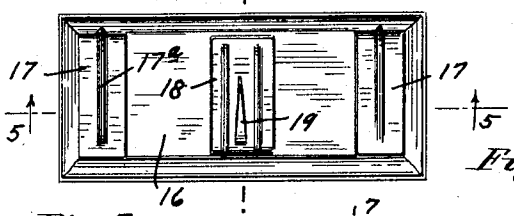

Fig. 4.

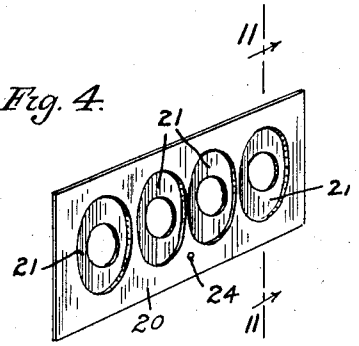

Fig. 5

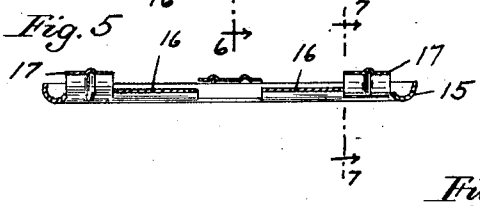

Fig. 6

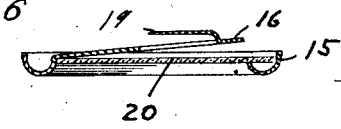

Fig. 11

Fig. 12

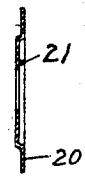

Fig. 7

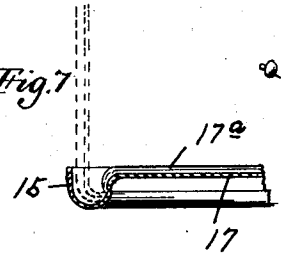

Fig. 8

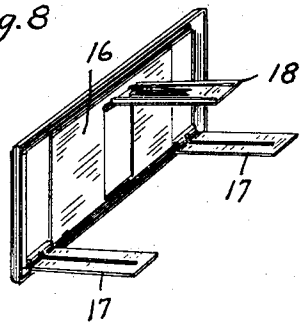

Fig. 9.

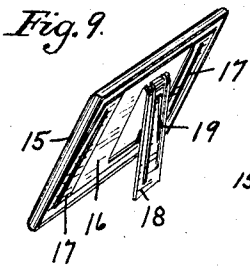

Fig. 10.

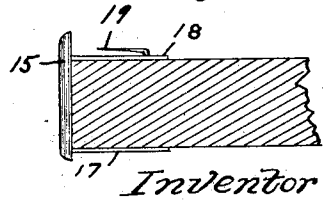

Fig. 13

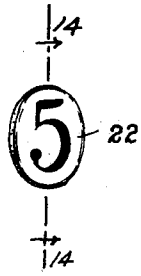

Fig. 14.

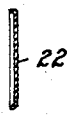

Inventor

WILLIAM M ANDERSON

By his Attorney

Harry D. Kilgore

UNITED STATES PATENT OFFICE.

WILLIAM M. ANDERSON, OF MINNEAPOLIS, MINNESOTA, ASSIGNOR TO IDEAL PRODUCTS COMPANY, OF MINNEAPOLIS, MINNESOTA, A LIMITED PARTNERSHIP.

PRICE-CARD HOLDER.

1,391,090. Specification of Letters Patent. Patented Sept. 20, 1921.

Application filed August 28, 1920. Serial No. 406,530.

To all whom it may concern:

Be it known that I, WILLIAM M. ANDERSON, a citizen of the United States, residing at Minneapolis, in the county of Hennepin and State of Minnesota, have invented certain new and useful Improvements in Price-Card Holders; and I do hereby declare the following to be a full, clear, and exact description of the invention, such as will enable others skilled in the art to which it appertains to make and use the same.

My invention has for its object to provide a very low cost, highly efficient marker card holder, meaning thereby, a holder for price cards, name plates, and the like; and to the above ends, generally stated, the invention consists of the novel devices and combinations of devices hereinafter described and defined in the claims.

The holder is stamped integral from a single piece of thin sheet metal, preferably sheet brass. As an additional feature of novelty, the marker plate is preferably made of sheet metal and formed with pockets to receive detachable and interchangeable character pieces, certain of which, at least, have figures or characters thereon.

In the accompanying drawings which illustrate my invention, like characters indicate like parts throughout the several views.

Referring to said drawings:

Figure 1 is a front elevation of the holder and marker or price card held therein;

Fig. 2 is a perspective looking at the rear of the holder, the arms thereof being folded;

Fig. 3 is a rear elevation of the holder;

Fig. 4 is a perspective of the marker plate with the character pieces removed;

Fig. 5 is a horizontal section taken on the line 5—5 of Fig. 3;

Fig. 6 is a section on the line 6—6 of Fig. 3;

Fig. 7 is a fragmentary section on the line 7—7 of Fig. 5;

Fig. 8 is a perspective looking at the rear of the holder and showing its arms opened up;

Fig. 9 is a perspective looking at the rear of the holder and showing one arm thereof opened out;

Fig. 10 shows the holder opened as shown in Fig. 8 and applied to a shelf, the latter being in section;

Fig. 11 is a section on the line 11—11 of Fig. 4;

Fig. 12 is a perspective of a small headed punctuation pin;

Fig. 13 is a perspective of one of the character pieces; and

Fig. 14 is a section on the line 14—14 of Fig. 13.

The holder comprises a rectangular marginal frame 15 that is stamped with a channel or bead, the outer edge of which projects backward farther than its inner edge. Stamped integral with this frame and left attached to one longitudinal inner edge thereof, is a back plate or main wing 16 and also end clamping arms 17. These arms 17, at their attached ends, are slightly offset and they have longitudinal stiffening ribs 17ª that extend around these offset portions and stiffening the same so that when said arms are turned outward, they will be outwardly shifted approximately to the outer flange of the frame channel to which they are attached.

In a similar manner, a third clamping arm 18 is stamped from the back plate 16, but is left attached thereto, at the outer edge portion of said plate. This arm, like the arms 17, is longitudinally ribbed and at its attached end, is slightly laterally offset, but in a direction opposite to the offset of said arm 17. This gives increased spread to the arms 17 and 18 when they are turned parallel, as shown in Figs. 8 and 10, and adapts them to embrace, for example, a $\frac{7}{8}$ths inch shelf when there is but $\frac{3}{4}$ of an inch transversely between their attached portions.

The arm 18 has a laterally pressed sharp pointed barb 19 which adapts the holder to be attached, for example, to a bolt of cloth. The marker card, already referred to, is preferably a thin flat metal plate 20 provided with depressed perforated pockets 21 to receive and frictionally hold individual disk-like, so-called character pieces 22, some of which are marked with figures or other characters, which, when assembled, will indicate price, or the like. These character pieces are interchangeably applicable in the pockets 21.

The numeral 23, (see Figs. 1 to 12), indicates a punctuation pin adapted to be inserted through a small perforation 24 in the plate, (see Fig. 4).

When the marker plate 20 is inserted between the marginal frame 15, and the back plate 16, its ends and one longitudinal edge

will be firmly held against the inner flange of said frame, and the outer flange of said frame and said back plate will securely hold said marker plate in position.

When only the one arm 18 is bent outward, the holder is then adapted to be set substantially upright on a table or other flat support. This holder may be made entirely by dies and, in one operation, hence, is of small cost. It can, of course, be used to hold ordinary paper or cardboard price cards, or the like.

The barb 19 can be inserted into a bolt of cloth, into a piece of meat or other article, either while the arm 18 is bent outward, as shown in Fig. 9, or when all of the arms are bent inward, as shown in Fig. 1, the holder can be shipped and packed in flat form.

What I claim is:

1. A marker card holder comprising a marginal frame, a back plate attached thereto at one edge and having an arm attached to its free edge, and a pair of arms attached to said frame adjacent to the ends of the attached edge of said back plate, said arms being adapted to be opened up to embrace a shelf.

2. A marker card holder comprising a marginal frame, a back plate attached thereto at one edge and having an arm attached to its free edge, a pair of arms attached to said frame adjacent to the ends of the attached edge of said back plate, said arms being laterally offset at their attached ends and having ribs that extend to said offsets and cause the same when bent outward into parallel relation, to be separated farther than the lateral distance between their attached end portions.

3. A marker card holder stamped from a single piece of sheet metal and comprising a marginal beaded rectangular frame, the outer flange of which projects laterally rearward of the inner flange of said frame, a back plate integrally attached at one edge to one longitudinal inner flange of said frame, an arm stamped from, but integrally attached to the free edge portion of said back plate, and a pair of arms integrally attached to the inner flange of said frame immediately adjacent to the attached edge of said back plate, said arms being adapted to be opened up to embrace a shelf.

4. A marker card holder stamped from a single piece of sheet metal and comprising a marginal beaded rectangular frame, the outer flange of which projects laterally rearward of the inner flange of said frame, a back plate integrally attached at one edge to one longitudinal inner flange of said frame, an arm stamped from, but integrally attached to the free edge portion of said back plate, and a pair of arms integrally attached to the inner flange of said frame immediately adjacent to the attached edge of said back plate, the said arms being offset at their attached ends and having longitudinal stiffening ribs that extend to said offset portions and cause said arms, when turned outward into parallel relation, to be laterally spaced farther than the distance between the attached end portions.

In testimony whereof I affix my signature.

WILLIAM M. ANDERSON.