June 2, 1970 E. FURTADO 3,515,269

CONTAINER FOR COILED WIRE

Filed Dec. 26, 1968

FIG. 1

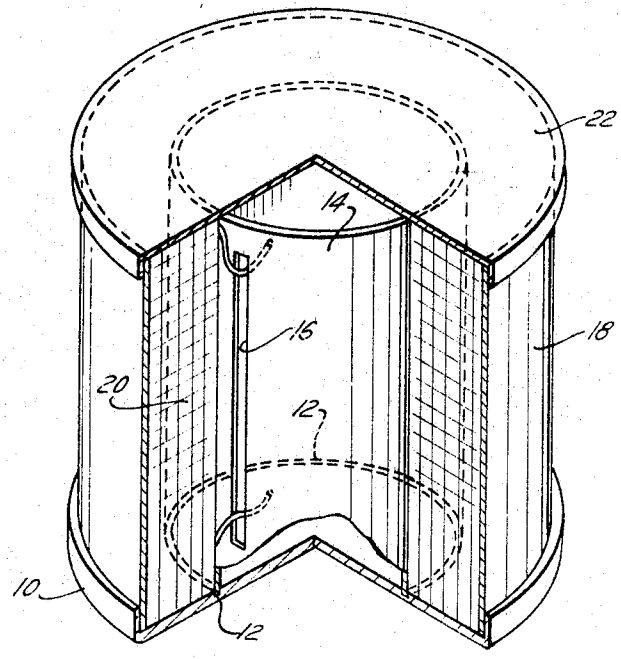

FIG. 2

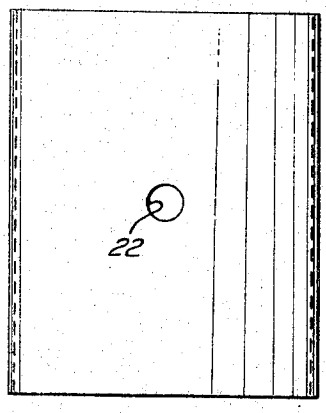

FIG. 3

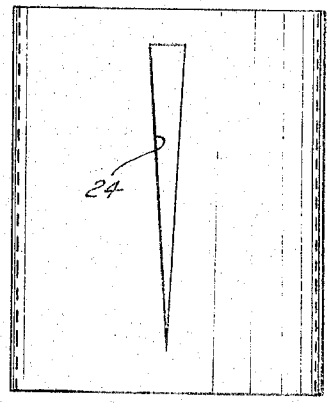

INVENTOR
EDWARD FURTADO
BY Theodore Jay Jr.
ATTORNEY

United States Patent Office 3,515,269 Patented June 2, 1970

3,515,269

CONTAINER FOR COILED WIRE

Edward Furtado, Rahway, N.J., assignor to Wilbur B. Driver, a corporation of Delaware

Filed Dec. 26, 1968, Ser. No. 786,964
Int. Cl. B65d 85/04
U.S. Cl. 206—52 5 Claims

ABSTRACT OF THE DISCLOSURE

A container comprising two hollow cylinders open at both ends and disposed concentrically one within the other to define an annular region therebetween. The cylinders are sealed by oppositely disposed removable end caps. The inner cylinder is provided with an opening in the cylinder wall disposed in a zone between the two end caps. Wire can be coiled in the annular region with both ends of the coil extending through the opening into the interior of the inner cylinder.

Summary of the invention

In accordance with the principle of my invention, I provide first and second hollow cylinders open at both ends. The cylinders are of like length, but differ in diameter and are disposed concentrically one within the other aligned sets of ends of both cylinders are sealed by oppositely disposed end caps. The inner cylinder contains an opening in its cylinder wall disposed in a zone intermediate the opposite ends. When a length of wire is coiled in the annular region between the cylinders, both ends of the coil can extend through the opening into the interior of the second cylinder. This permits the user to have access to both ends of the coil for use in testing, sampling and the like without removing the coil from the container.

Brief description of the drawings

In the drawings:

FIG. 1 is a perspective cut away view of one form of my invention;

FIG. 2 is a detailed view of a differently shaped opening for use in the inner cylinder of the apparatus of FIG. 1; and

FIG. 3 is a view similar to FIGURE 2, but showing a differently shaped opening.

Detailed description of preferred embodiments

Referring now to FIG. 1, a generally flat, circular bottom cap **10** adapted to rest on a horizontal surface with its inner surface projecting upwards is provided with a circular groove **12** centered on the center of the inner surfaces of the cap. A first hollow cylinder **14** open at both ends and provided with a narrow, elongated axially extending rectangular slot **16** is disposed vertically with its bottom end resting in the circular groove. A second hollow cylinder **18** of larger diameter and also open at both ends is disposed concentrically about cylinder **14**. The bottom end of cylinder **18** is held in place by the outer lip of cap **10**. A coil of wire **20** can be coiled in the annular region between the cylinders with its opposite free ends extending through the slot **16** into the interior of cylinder **14**. An oppositely disposed top cap **22**, substantially identical to the bottom cap but inverted, can be disposed over the set of the top ends of both cylinders to complete the container. Removal of either end cap exposes both ends of the coil, whereby it can be electrically tested or sampled as previously described.

It will be apparent that the slot does not extend to the ends of the inner cylinder in order to avoid so weakening cylinder **14** as to cause it to fail in use.

As shown in FIGS. 2 and 3, the rectangular slot can be replaced by differently shaped openings, such as the small circular opening **23** of FIG. 2 or the triangularly shaped opening **24** of FIG. 3.

While I have described by invention with particular reference to the embodiments shown in the drawings, my protection is to be limited only by the terms of the claims which follow.

What is claimed is:

1. A package adapted for the storage and transport of a coil of strand material, said package comprising:

a first hollow cylinder open at both ends and having a first diameter, said first cylinder having an opening in the cylinder wall intermediate the ends;

a second hollow cylinder open at both ends and having a second and larger diameter, said second cylinder being disposed concentrically about the first cylinder; and

first and second cup means each sealing one set of corresponding ends of the first and second cylinders, whereby a confined annular region extending between the cylinders is formed, said annular region receiving a coil of strand material with both free ends of the coil extending through said opening into the interior of the inner cylinder.

2. A package as set forth in claim **1** wherein said opening is a narrow elongated axially extending slot.

3. A package as set forth in claim **1** wherein said opening has a circular shape.

4. A package as set forth in claim **1** wherein each end cap has a circular groove for receiving the corresponding end of the first cylinder.

5. A package as set forth in claim **1** wherein said coil of strand material is a coil of wire.

References Cited

UNITED STATES PATENTS

1,775,228	9/1930	Valentine	206—52
1,887,626	11/1932	Elssner et al.	206—52 X
1,997,426	4/1935	Morse et al.	206—64 X
3,114,456	12/1963	Van Billiard	206—59

FOREIGN PATENTS

828,640	2/1960	Great Britain.
844,417	8/1960	Great Britain.

JOSEPH R. LECLAIR, Primary Examiner
S. E. LIPMAN, Assistant Examiner

U.S. Cl. X.R.
206—59, 64; 242—129