Jan. 12, 1965 G. REITZEL 3,165,225

BOX COVER SUPPORT

Filed March 27, 1963

FIG. 1

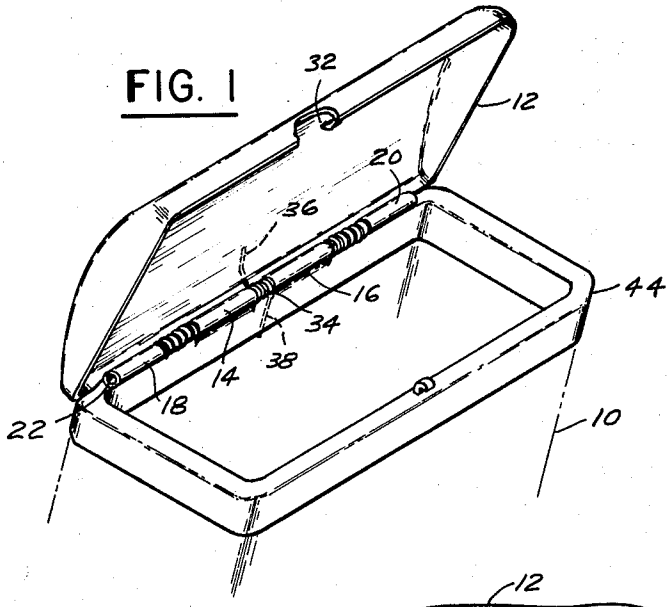

FIG. 2

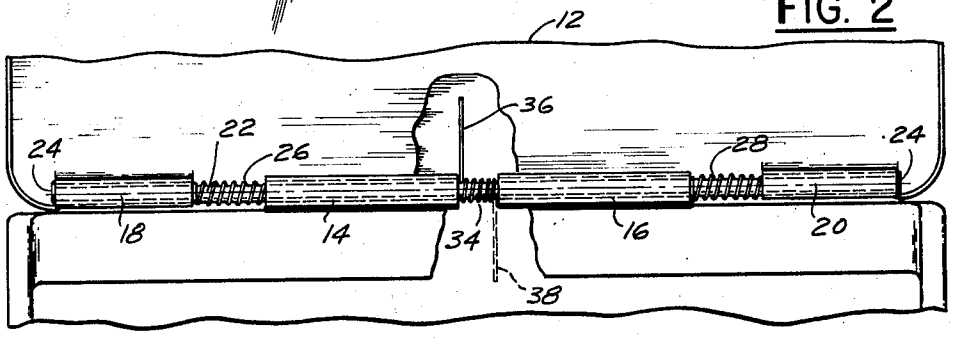

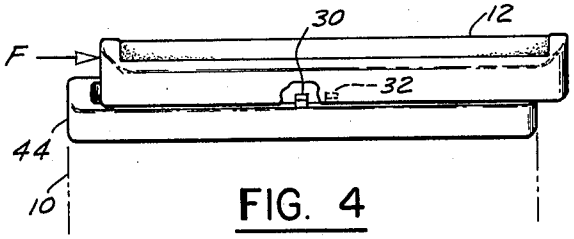

FIG. 4

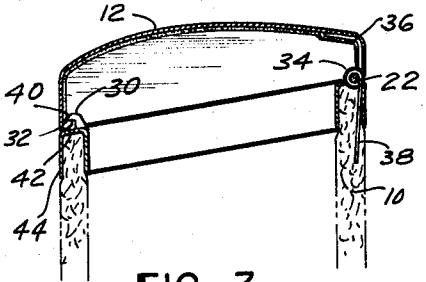

FIG. 3

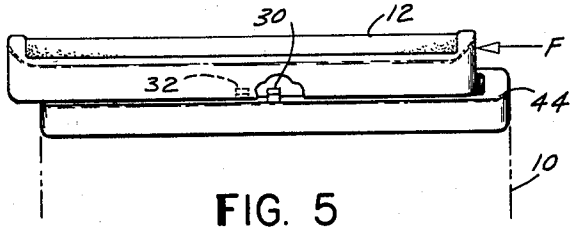

FIG. 5

INVENTOR.
GEORG REITZEL
BY Hane and Nydick
ATTORNEYS

United States Patent Office 3,165,225 Patented Jan. 12, 1965

3,165,225

BOX COVER SUPPORT

Georg Reitzel, Altenmittlau, Kreis Gelnhausen, Germany, assignor of one-half to Drescher & Kiefer, Altenmittlau, Kreis Gelnhausen, Germany, a German firm, and one-half to Randolph-Rand Corporation, New York, N.Y., a corporation of New York

Filed Mar. 27, 1963, Ser. No. 268,249
5 Claims. (Cl. 220—35)

This invention relates to a box cover support, and more particularly to an improved pivotal support for a box cover for facilitating release of the cover from its closed position. The box and cover arrangement of the present invention may be used for practically any type of box and is particularly adaptable for use with a box used as a carrying case for a package of cigarettes or as a jewelry case.

It is a broad object of the invention to provide a novel and improved hinged box top or cover which is locked to the box by externally invisible locking means and can be opened only by a mode of operation that is not apparent from the outside. Such concealed mechanism protects the contents of the box against pilfering by a person not familiar with the "secret" mode of operation, and also has considerable entertainment value when a cigarette case according to the invention is offered to a person with the suggestion to help himself.

A specific object of the invention is to provide a novel and improved box cover which can be conveniently locked and unlocked with one hand.

Another specific object of the invention is to provide a novel and improved box cover which may be easily opened with one hand merely by sliding the cover in either one of two directions, and which may also be easily closed with one hand merely by pivoting the cover to its closed position.

Another specific object of the present invention is to provide a box with a hinged cover and a latch mechanism for the cover which is concealed from view when the cover is in a closed position, and wherein the cover is sprung to the open position by sliding the cover to one side relative to the box.

Another specific object is to provide a box with a hinged cover which may be sprung into the open position by pushing the cover parallel to itself in either one of two directions.

Another specific object is to provide a box having a simplified structure for pivotally supporting a cover such that the cover is automatically unlatched when it is slid to one side relative to the box.

Other objects and features of the invention will appear as the description of the particular physical embodiment selected to illustrate the invention progresses.

For a better understanding of the present invention, reference should be had to the accompanying drawings, wherein like numerals of reference indicate similar parts throughout the several views, and wherein:

FIG. 1 is a perspective view of the upper portion of a box showing structure according to the invention for pivotally supporting and latching a cover, the cover being partly broken away to show a portion of the latch;

FIG. 2 is a front view, on an enlarged scale, of the pivotal support and latch structure of FIG. 1 with the cover in an open position;

FIG. 3 is an elevation in cross section of the box and cover of FIG. 1;

FIG. 4 is a front view of the upper portion of the box of FIG. 1 with the cover, which is partly broken away, in a closed position and displaced to one side of the box; and

FIG. 5 is similar to FIG. 4, except that it shows a different position of displacement of the cover relative to the box.

Referring to the drawings, FIG. 1 shows the upper portion of a case 10, such as a cigarette case, upon which a cover or top 12 is supported. In order to hinge the cover 12 to the box 10, a pair of lugs 14, 16 extending from an edge of the box 10 and a pair of lugs 18, 20 extending from an edge of the cover 12 are provided, in spaced-apart relationship. The lugs 14, 16 on the box are disposed between the spaced-apart lugs 18, 20 on the cover 12. A pin or shaft 22 slidably passed through the lugs hinges the cover 12 to the box 10. The shaft 22 is maintained in position by providing means, such as enlarged heads, at each end of the shaft 22 which prevent the shaft 22 from sliding out of the lugs and also in reference to lugs 18, 20 once the hinge mechanism is assembled. The enlarged heads may be formed, for example, by peening over the ends of the shaft 22, as indicated by the numeral 24 in FIG. 2. One of the enlarged heads is, of course, made after the shaft 22 is inserted through the coaxial elongated openings of the lugs. The shaft may also be fixedly secured to one or both lugs 18 and 20.

Carried on the shaft 22 between lugs 14, 18 and between lugs 16, 20 are coil springs 26 and 28 respectively. The ends of the springs 26, 28 abut the sides of the respective lugs, and these springs are loosely mounted on shaft 22 so that they are free to be compressed and expanded as the distance between the respective lugs is decreased and increased. Since lugs 14, 16 are free to slide longitudinally on the shaft, it is evident that with the above-described construction, the cover 12 is free to move relative to the box 10 by sliding the cover 12 in a direction parallel to the longitudinal axis of the shaft 22.

When the cover 12 is slid to the right, as shown in FIG. 4, for example, the force F applied to the cover 12 will compress the spring 26 as the lug 18 is moved axially closer to the lug 14, and the spring 28 will be allowed to expand as the lug 20 moves axially farther away from the lug 16. In this regard it is pointed out that the springs 26 and 28 are matched, and the distances between the lugs 18, 14 and 16, 20 are maintained substantially equal by the springs in the absence of an applied force F. Thus, in the absence of an applied force F, the cover will normally be maintained in an aligned position relative to the box such that the ends of the cover are coextensive with the ends of the box, as is best shown in FIG. 2. In FIG. 2, therefore, the springs 26 and 28 are under slight compression, but the cover is maintained in an aligned position because the springs are matched.

Instead of applying a force F to shift the cover 12 to the right, the force F may be applied to shift the cover to the left, as it is shown in FIG. 5. In this case, the spring 28 will be compressed as the lug 20 approaches the lug 16, and the spring 26 will be allowed to expand as the lug 18 moves away from the lugs 14.

From the foregoing description, therefore, it can be seen that the cover will normally maintain an aligned position on the box 10, but may be shifted in either direction by applying a correspondingly directed force to the cover 12.

The slidable mounting of the cover is utilized to unlatch the cover from the box. The cover 12 is normally held in a closed position, such as is shown in FIG. 3, by a latch mechanism, which may comprise, for example, a hook 30 on the box 10 and a catch 32 on the cover 12. The hook 30 and catch 32 are in registry and engage one another when the cover 12 is generally aligned with the box 10. The widths of the hook 30 and catch 32 are such that when the cover 12 is slid in either direction, as described above, the catch 32 will slide out of engagement

with the hook 30, and the cover 12 will be sprung into an open position by a spring 34 carried on the shaft 22 between the spaced lugs 14 and 16. One end 36 of the coil spring 34 extends outwardly to engage the cover 12, while the other end 38 extends outwardly to engage the box 10, so that the coil spring serves as a torsion spring tending to urge the cover 12 toward an open position, as shown in FIG. 1 The end 38 of the coil spring 34 may be secured to the box, as shown in FIG. 3, by embedding it in the material forming the box. The coil spring 34 is maintained in its axial position on the shaft 22 between the two lugs 14 and 16 as the cover is shifted so that the shaft 22 slides through the stationary box lugs 14 and 16 and the coils of the spring 34, while the end 36 of the springs slides on a face of the cover 12. The end 36 of the spring 34 may slide, for example, on the inside face of the cover as the latter is shifted.

Once the cover 12 has sprung open and the force F is removed, the cover will, in its open position, automatically resume its aligned position relative to the box 10, because the matched spring 26 and 28 will re-equalize the distances between the lugs 14, 18 and 16, 20. The coil spring 34 will maintain the cover in its open position. While in its open and aligned position, the cover may be snapped shut merely by pivoting it to its closed position without sliding the cover relative to the box, as was the case when the cover was unlatched. The normal resiliency of the materials used in making the various parts of the box and cover will allow the catch 32 to override the hook 30 to snap shut to a closed position, as shown in FIG. 3. To facilitate closing of the cover, the hook 30 and catch 32 may be provided with inclined surfaces 40 and 42, respectively, which engage and slide on each other as the cover is snapped to a closed position.

As is evident, the entire locking mechanism is completely concealed by the rim of the cover when the same is closed.

The parts of the box and cover may be made of any suitable materials. The box, for example, may be made of plastic sheet material covered with leather or other decorative material, while a metal border member 44, made of brass, for example, may be secured to the box along the upper edges thereof. The border member 44 may have an inverted U-shaped cross section such that the upper edge of the box may be accommodated in the member 44, as is shown in FIG. 3, thereby retaining the upper edges of the plastic sheet and decorative material, while at the same time increasing the rigidity of the box structure. The sides of the border member 44 may be pressed onto the material of the box which it accommodates to assure a good connection therebetween. The lugs 14, 16 may be formed integral with the border member by initially providing flat extension pieces of the border member and then bending them to form elongated cylinders, as shown in the drawings.

The cover 12 may be made entirely of metal, for example, with a portion covered with decorative material to match the decorative material of the box, or alternatively, a metal border member (not shown) may be used as in the case of the box. The lugs 18, 20 may be formed integral with the cover or its border member, as in the case of the box, by initially providing flat extension pieces and bending them to the cylindrical form shown in the drawings. The cover and box may be made to match in a plane slanted in reference to the sides of the box, as is best shown in FIG. 3.

As an alternative construction, the lugs 14, 16 may extend from the cover 12 and the lugs 18, 20 may extend from the box 10. The enlargements 24 are then omitted on the ends of the shaft 22 so that by providing means for preventing longitudinal movement between the lugs 14, 16 and shaft 22, the cover will slide with the lugs 14, 16. The longitudinal lengths of the lugs 18, 20 must, of course, be such that when the cover is slid to an unlatching position, the shaft 22 will still be engaged by lugs 18 and 20.

When the above-described box is used as a carrying case for a package of cigarettes, the cover may be opened with one hand, either the left or the right, by grasping the box in the palm of the hand and with the thumb, pushing the cover to the left or right, depending on which hand the box is grasped in, and allowing the spring 34 to spring the cover to its open position. To close the box, the cover may readily be snapped shut also with the thumb.

The invention hereinabove described may be varied in construction within the scope of the claims, for the particular device selected to illustrate the invention is but one of many possible embodiments of the same. The invention, therefore, is not to be restricted to the precise details of the structure shown and described.

What is claimed is:

1. A case comprising a bottom part open at one end and having a pair of ears extending from one edge of the bottom part at the open end thereof and a closure part for closing the bottom part and having a pair of ears extending from a corresponding edge of the closeure part, the two ears of one pair being disposed between the two ears of the other pair in alignment therewith and spaced therefrom, a pintle extending through said ears to provide a hinge connection between the two parts allowing for relative displacement thereof in the direction of said pintle, a positioning coil spring disposed between each ear of one pair and the adjacent ear of the other pair, said springs biasing the two parts into predetermined positions in reference to each other, fastening means securing said pintle to the pair of outer ears to prevent displacement of the pintle in reference to said outer ears, latch means on the bottom part and the closure part engageable with each other when said two parts are in said predetermined positions and disengageable when the parts are displaced out of said position, and a case-opening coil spring disposed between the two intermediate ears, said opening spring encompassing the pintle and abutting against the bottom part and the closure part to bias the latter into an open position, whereby upon closing of the closure part against the action of said opening spring, said latch means maintain the closure part in its closed position, and upon displacement of the closure part in reference to the bottom part in the direction of the pintle against the action of said positioning spring, the latch means are released and said opening spring opens said closure part.

2. A case as set forth in claim 1, wherein said latch means comprise a hook member and a catch member, one of said members being connected to said closure part and the other of said members being connected to said bottom part, said members being disengaged when said two parts are displaced in reference to each other in either direction.

3. A case as set forth in claim 1, wherein said case-opening coil spring has one end extension engaging the closure part and another end extension slidably engaging the bottom part, whereby said coil spring urges said closure part to pivot about said pintle to an open position.

4. A case as set forth in claim 1, wherein said fastening means comprise enlargements at the ends of the pintle, said enlargements overhanging the inner peripheral outline of the outer ears.

5. A case set forth in claim 1 and further comprising a border member on the upper edge of said bottom part, said pair of outer ears extending from said border member, the cross section of said border member being in the form of an inverted U for engaging the upper edge of said bottom part.

References Cited by the Examiner

UNITED STATES PATENTS

1,054,979	3/13	Mitchell	206—41
1,923,560	8/33	Whittaker	206—1.5
3,024,899	3/62	Reitzel	220—38

THERON E. CONDON, *Primary Examiner.*