(No Model.)

R. L. COCHRAN & A. M. BANKS.

MIRROR ATTACHMENT FOR CHAIRS.

No. 593,043. Patented Nov. 2, 1897.

Fig. 1.

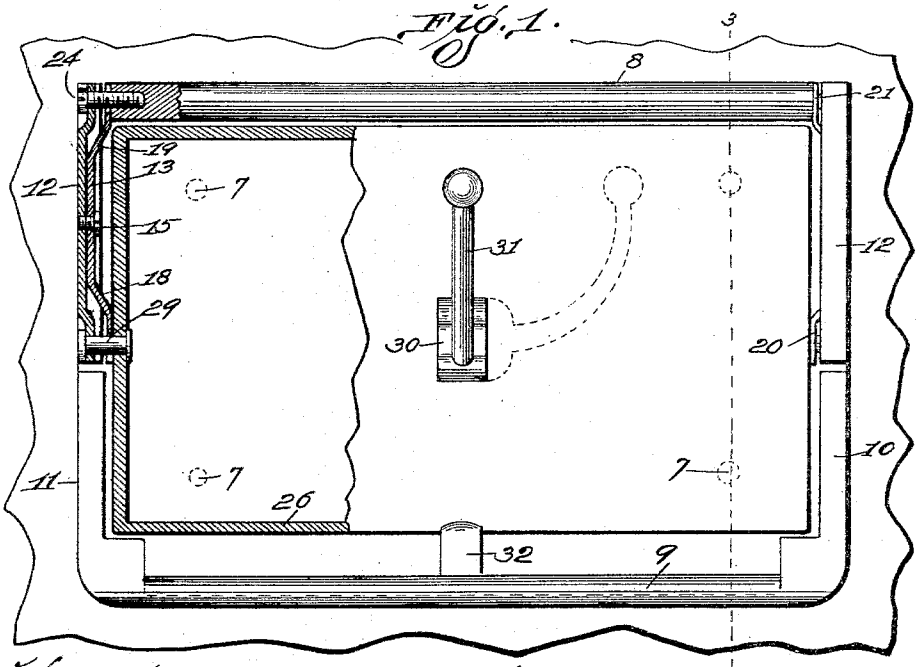

Fig. 2.

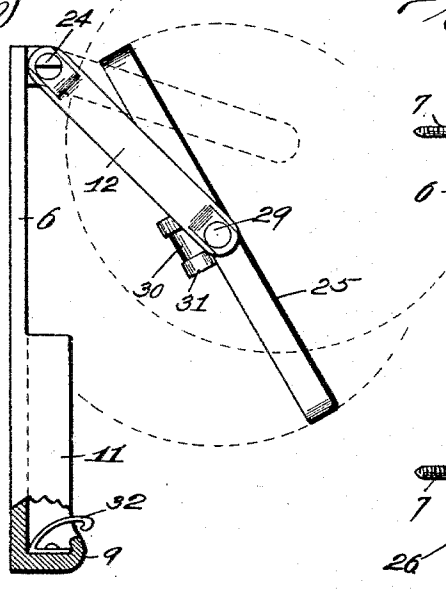

Fig. 3.

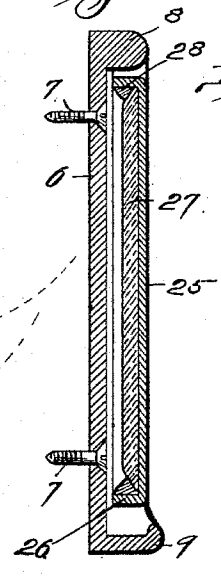

Fig. 4.

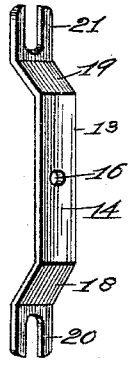

Fig. 5.

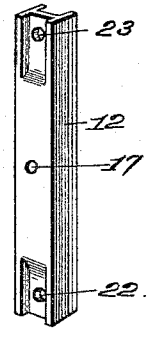

Witnesses:
W. P. Smith
S. G. Wells

Inventors:
Richard L. Cochran and
Anita M. Banks.

By Higdon, Longan & Higdon, Attys.

THE NORRIS PETERS CO., PHOTO-LITHO., WASHINGTON, D. C.

UNITED STATES PATENT OFFICE.

RICHARD L. COCHRAN AND ANITA M. BANKS, OF ST. LOUIS, MISSOURI.

MIRROR ATTACHMENT FOR CHAIRS.

SPECIFICATION forming part of Letters Patent No. 593,043, dated November 2, 1897.

Application filed February 15, 1897. Serial No. 623,579. (No model.)

To all whom it may concern:

Be it known that we, RICHARD L. COCHRAN and ANITA M. BANKS, of the city of St. Louis, State of Missouri, have invented certain new and useful Improvements in Mirror Attachments for Chairs and the Like, of which the following is a full, clear, and exact description, reference being had to the accompanying drawings, forming a part hereof.

Our invention relates to mirror attachments for chairs and the like; and it consists of the novel construction, combination, and arrangement of parts hereinafter shown, described, and claimed.

Figure 1 is a view in elevation looking at the back of the mirror when it is folded and out of use, parts being broken away and parts being shown in section. Fig. 2 is a side elevation showing the mirror in position for use. Fig. 3 is a vertical transverse sectional view taken through the mirror and approximately on the line 3 3 of Fig. 1. Fig. 4 is a view in perspective of one of the leaf-springs of which we make use. Fig. 5 is a view in perspective of the swinging arms, the operation of which is controlled by the spring shown in Fig. 4.

In the construction of a mirror to be attached to the backs of chairs and the like and in accordance with the principles of our invention we employ the rectangular plate 6, having apertures to receive the screws 7, said screws being inserted into the back of the chair to secure the mirror in position. The flange 8 projects backwardly from the upper edge of the plate 6, and a similar flange 9 projects from the lower edge of said plate, and the ends 10 and 11 of said flange extend approximately one-half of the way across the ends of the plate 6.

The swinging arms 12 are in the form of a channel-bar in cross-section at their centers, and each end of each of said arms is in the form of an I-beam.

Each of the leaf-springs 13 consists of the central portion 14, which is placed within the channel-bar portion of one of the swinging arms 12 and secured in position by means of the screw 15, inserted through the aperture 16 in said spring and screw-seated in the aperture 17 in the swinging arm. From the ends of the portion 14 of the spring the portions 18 and 19 are bent inwardly to angles of approximately forty-five degrees, and the slotted ends 20 and 21 extend from the outer ends of the portions 18 and 19, respectively, in lines parallel with the portion 14. The slots in the ends 20 and 21 are in alinement with the openings 22 and 23 in the I-beam portions of the arms 12. The screws 24 are inserted through the openings 23 in the upper ends of the swinging arms 12 and through the slotted ends 21 of the springs 13, and said screws are screw-seated in the ends of the flange 8.

The swinging plate 25 is somewhat smaller than the plate 16 and of substantially the same form and outline, and the flange 26 is formed integral with said plate 25 and extends entirely around the edge thereof. The glass 27 is placed against the plate 25 and within the flange 26 and secured in position by means of the strips 28, which strips are secured to the inner faces of the flange 26. The pins 29 are inserted through the apertures 22 in the lower ends of the arms 12, through the slots in the ends 20 of the springs 13, and through the flange 26 of the plate 25, and said pins are headed down or secured in position in any suitable way. The pins 29 form a pivotal support for the glass 27, carried by the plate 25, and the arms 12 form a swinging support for the glass, and the tension of the spring 13, the ends of which engage the ends of the flange 8 and the outer faces of the flange 26, stiffens the joints, as required, to hold the mirror in any desired position.

Projecting backwardly from the plate 25 is an ear 30, and the handle 31 has one of its ends bifurcated to receive said ear 30, and a pin forms a pivotal connection between the handle and the plate by passing through said bifurcated end and through said ear, thus allowing the handle to fold against the plate 25, as indicated in dotted lines in Fig. 1.

A leaf-spring 32 is attached to the inner face of the flange 9 and approximately at its center, the free end of said spring projecting upwardly and outwardly to engage the flange 26 when the mirror is folded and closed, as shown in Fig. 1.

The mirror may be turned upon the pins 29 to present its face outward, and then the lower ends of the arms 12 may be swung backwardly and upwardly to bring the mir-

ror into any desired position, and the tension of the springs 13 will hold the mirror in that position. When the use of the mirror is not desired, it may be turned upon the pins 29 to present its back outwardly, and then may be pressed downwardly until the flange 26 comes inside of the flanges 8, 9, 10, and 11 and the arms 12 are in a vertical position or in a position parallel with the plate 6.

Our mirror is intended to be attached to the backs of opera-chairs; but it is obvious that it may be attached to a wall or to anything which will receive the screws 7 or other suitable means for supporting the mirror.

We claim—

1. In a device of the class described, the rectangular plate 6, the flange 8 projecting from the upper edge of said plate, the flange 9 projecting from the lower edge of said plate and having the ends 10 and 11 extending approximately one-half the length of the end edges of said plate 6, the swinging arms 12 in the form of channel-bars at their centers and in the form of I-beams at their ends pivotally connected to the ends of the flange 8, the swinging plate 25 pivotally connected to the lower ends of said swinging arms 12, the leaf-springs 13 consisting of the central portions 14, which portions are placed within the channel-bar portions of the swinging arms 12 and secured in position by the screws 15, and consisting of the end portions 18 having the slot 20, which end portions are placed against the ends of the swinging plate 25, and consisting of the end portions 19, which end portions are placed against the ends of the flange 8, substantially as specified.

2. In a device of the class described, a suitable plate having a flange projecting backwardly from its upper edge, the swinging arms 12 in the form of channel-bars at their centers and in the form of I-beams at their ends pivotally connected to the ends of the flange 8, the swinging plate 25 pivotally connected to the lower ends of said swinging arms 12, the leaf-springs 13 consisting of the central portions 14, which portions are placed within the channel-bar portions of the swinging arms 12 and secured in position by the screws 15, and consisting of the end portions 18 having the slot 20, which end portions are placed against the ends of the swinging plate 25, and consisting of the end portions 19, which end portions are placed against the ends of the flange 8, the perforated ear 30 projecting from the center of the plate 25, and the handle 31 having one of its ends bifurcated and pivotally attached to said ear, substantially as specified.

3. In a device of the class described, the rectangular plate 6, the flange 8 projecting from the upper edge of said plate, the flange 9 projecting from the lower edge of said plate and having the ends 10 and 11 extending approximately one-half the length of the end edges of said plate 6, the swinging arms 12 in the form of channel-bars at their centers and in the form of I-beams at their ends pivotally connected to the ends of the flange 8, the swinging plate 25 pivotally connected to the lower ends of said swinging arms 12, the leaf-springs 13 consisting of the central portions 14 which portions are placed within the channel-bar portions of the swinging arms 12 and secured in position by the screws 15, and consisting of the end portions 18 having the slot 20, which end portions are placed against the ends of the swinging plate 25, and consisting of the end portions 19, which end portions are placed against the ends of the flange 8, and a leaf-spring 32 attached to the inner face of the flange 9 and approximately at its center and projecting upwardly to engage the edge of the swinging plate 25, substantially as specified.

In testimony whereof we affix our signatures in presence of two witnesses.

RICHARD L. COCHRAN.
ANITA M. BANKS.

Witnesses:
EDWARD E. LONGAN,
MAUD GRIFFIN.