Oct. 1, 1929. E. D. ANDERSON 1,729,811

SEALING MACHINE

Filed May 24, 1927

Fig. 1.

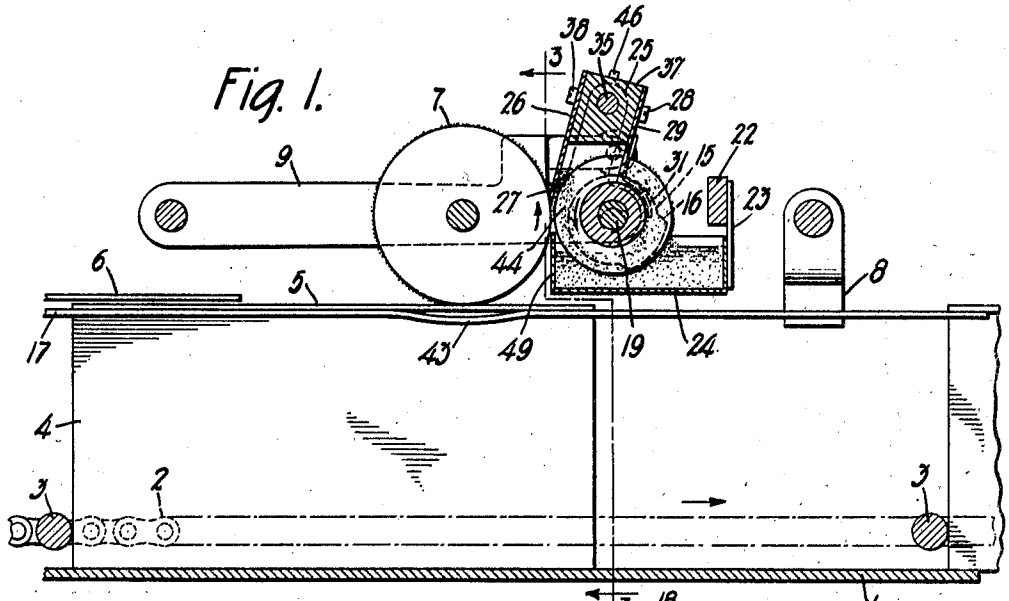

Fig. 2.

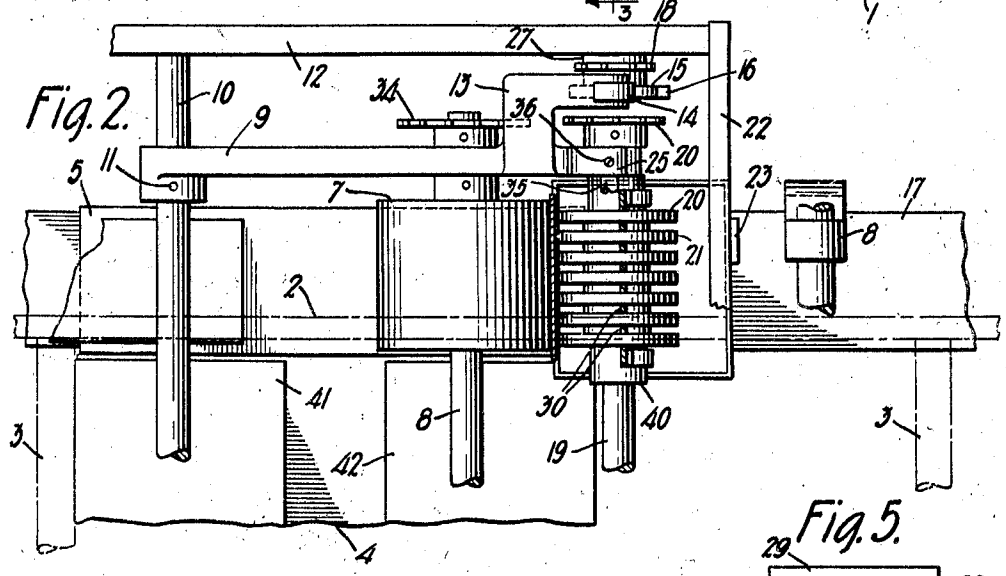

Fig. 5.

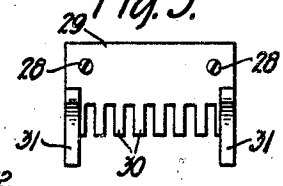

Fig. 3.

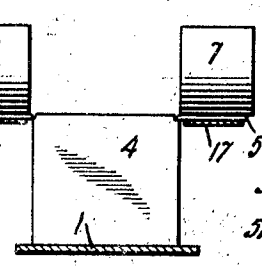

Fig. 4.

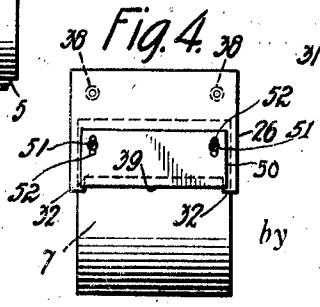

Inventor

E. D. Anderson

by Paul Wesinski

his Attorney

Patented Oct. 1, 1929 1,729,811

UNITED STATES PATENT OFFICE

ERNEST D. ANDERSON, OF NEW YORK, N. Y., ASSIGNOR TO E. D. ANDERSON, INC., OF NEW YORK, N. Y, A CORPORATION OF DELAWARE

SEALING MACHINE

Application filed May 24, 1927. Serial No. 193,929.

This invention relates to apparatus for coating and in particular to such apparatus as used in wrapping machinery for sealing purposes.

The principal object of the invention is to provide apparatus for coating surfaces particularly those used for sealing purposes.

Heretofore in automatic wrapping and sealing machines it has been well recognized that the most desirable adhesive to be applied to the enclosing container flaps for the purposes of sealing the same is a substance containing one or more of the mineral glues preferably water glass or the silicates of sodium and potassium.

It is also well known that the mineral glues do not have any objectionable odors and offer comparatively high resistance to heat and do not become sticky and lose their binding power when subjected to heat as do the ordinary animal glues. Furthermore, mineral glues do not retain or absorb moisture to the same degree as the animal glues. For this and other reasons it is clear that the mineral glues are highly desirable for use in sealing containers which are charged with articles such as food or soap which might be subject to contamination by the odor from ordinary animal glue. Notwithstanding these noteworthy advantages of mineral glues, over the animal glues, heretofore so far as applicant is aware, no successful or practical machinery has been designed for enabling surfaces to be properly coated with an even layer of such mineral glue. While known machines are employed for automatically sealing containers with animal glues, these machines are not adapted to apply the mineral glues because of the character of the mineral glues, that unless they are applied in an even and smooth manner to the surface to be coated they will form and solidify into lumps. This difficulty has limited the use of mineral glues for sealing purposes substantially, if not entirely to manual operations. Furthermore, this tendency of mineral glue to form lumps and harden into a glass-like structure heretofore has rendered its use in machines employing continuously rotating rollers impracticable. Accordingly, it is one of the principal objects of the present invention to provide means for automatically applying an even coating of mineral glue to any surface and particularly to the enclosing flaps of containers to be sealed.

A feature of the invention has reference to apparatus for automatically coating in an expeditious and economical manner the surfaces of container flaps with an even layer of mineral glue.

A further feature pertains to a sealing device, employing mineral glue as an adhesive, wherein continuously operating rollers are employed for transferring the glue from a reservoir to the surface to be sealed. A still further feature is concerned with a sealing device employing rollers for applying a coating of the glue to a surface together with means for preventing the accumulation and hardening of excess glue on the rollers.

A further feature is concerned with the mechanism for coating with paste or similar material a container enclosing flap in such a manner that the coating is discontinuous at those points where the flap when closed is likely to engage the contents of the container.

A still further feature pertains to an improved "top gluer" for wrapping machines by means of which the sealing flaps of a container may be efficiently coated with paste or glue-like substance while the container is in motion through a wrapping machine.

Heretofore in sealing machines of the "top gluer" type much difficulty has been encountered in feeding the paste or glue to the roller applicator in the proper quantity without causing leakage of the liquid adhesive upon adjacent parts of the machine. Accordingly, one of the main features of the invention resides in the combination of gluing rollers and a device whereby the glue or other liquid adhesive is prevented from gaining access to points where its presence might interfere with the working of the wrapping machine proper.

The invention further contemplates the novel form and organization of the several parts which go to make up a gluing device which may be removably attached to any standard form of wrapping machine.

Referring to the drawing in which the invention is illustrated in its preferred embodiment as applied to any standard type of wrapping machine, Fig. 1 shows the gluer mechanism of the invention and a portion of the conveyer and guide plates of a wrapping machine.

Fig. 2 is a partial plan view of the mechanism disclosed in Fig. 1.

Fig. 3 is a schematic showing of the manner in which the glue applicator rollers are related to the enclosing flaps of a container during the gluing process.

Fig. 4 is a detailed view of the scraper plate shown in Figs. 1 and 2.

Fig. 5 is a detailed view of the comb which co-operates with certain of the glue applicator rollers disclosed in Figs. 1 and 2.

Corresponding parts of the mechanism disclosed in the several figures of the drawing are characterized by the same designation numerals.

Numeral 1 indicates a portion of a horizontally disposed track plate securely fastened to the main frame of any well known type of wrapping machine and along which the containers to be sealed are passed. For the purpose of conveying the charged container 4 along the track 1 and through the wrapping machine there are provided two endless chains, a portion of one being shown in Fig. 1 and designated by the numeral 2. These two chains are moved parallel to each other by suitable driving mechanism and are connected rigidly together at various points by means of the cross-bars 3. This provides in effect an endless ladder-like chain between the cross-bars of which the charged container 4 is positioned in any suitable manner prior to registry with the gluing mechanism shown in Figs. 1 and 2. When a cross-bar 3 moving in the direction indicated by the arrow in Fig. 1 engages the left-hand end of the charged container the latter is moved horizontally along the supporting track 1. At a certain point in the movement of the container the side flaps 5 thereof are spread out horizontally and pass between the guide plates 6 and 17. Plate 6 is supported in any suitable manner on the main frame of the machine while the guide plate 17 is supported at either end thereof by means of suitable hangers 8.

It will be noted that in Figs. 1 and 2 gluing and guiding mechanism for only one of the side flaps 5 is shown. It will be understood, however, that duplicate mechanism is provided at the opposite side of the machine for guiding and gluing the other side flap. Accordingly, the description given hereinafter while referring to the apparatus on one side of the machine is equally descriptive of corresponding apparatus on the opposite side.

The gluing mechanism for each side flap comprises the main applicator roller 7 which is rotated through gears 34, in the direction of the arrows, from any suitable source of motive power and preferably at substantially the same rate at which the chain is moved. Applicator rollers 7 are secured to shaft 8 which extends horizontally over the plates 17, and is rotatably supported at either end in respective rocker arms 9. The left-hand ends of rocker arms 9 are secured to the shaft 10 by means of pins 11, or in any other suitable manner. Shaft 10 may be suitably journalled in the side plates 12 which form part of the main frame of the machine. The rocker arms 9 near their right-hand ends have offset angle pieces 13, the end of each angle piece being bifurcated and in this bifurcated portion is rotatably mounted the cam following roller 14.

The extreme right-hand ends of rocker arms 9 are provided with integral extensions 25 which project upwardly and are provided with circular openings through which the transverse bar 35 passes and is secured by means of screws 46. Between the extensions 25 there is a block 37 which has a circular opening throughout its length and through which the bar 35 extends.

As shown more clearly in Fig. 1, block 37 is fastened to bar 35 in such a manner that the left-hand and right-hand faces are inclined at an angle from the vertical. The purpose of thus mounting block 37 will appear hereinafter. Secured to the left-hand face of block 37 by screws 38, is the plate 26, the lower edge of which has a long notch 39 cut therein. The sides 32 of this notch are in the form of knife edges and bear upon the surface of roller 7 near its ends, as shown in Figs. 1 and 4.

For the purpose of maintaining a continuous supply of fresh glue at the periphery of roller 7 and for returning excess glue to the pot 24, a feed roller comprising sections 20, 21, etc. is mounted on shaft 19 for rotation therewith and in the same direction as roller 7. This roller may be thought of as a plurality of spaced individual rollers, as each section acts as a separate rolling surface. Shaft 19 is suitably journalled in the right-hand ends of the rocker arms 9 and is driven by means of gears 20′ preferably at the same rate as shaft 8 and in the same direction. Roller 7 as well as the feed roller sections 20, 21, etc. are preferably made of metal or other wear-resisting material. It will be noted that sections 20, 21, etc. of the feed roller are normally partially immersed in the supply of glue in pot 24 which will be termed hereinafter as the main reservoir. Pot 24 is conveniently mounted on the transverse bar 22 attached to the main frame 12 in any suitable manner. It will be understood that the reservoir 24 may have its supply continuously replenished from a larger reservoir by any suitable means (not shown). Obviously then, as

the sectional feed roller rotates, the peripheral surfaces are continuously covered with a fresh layer of glue from the reservoir 24. It will also be noted that the roller sections 20, 21, etc., being mounted in close proximity to the roller 7, form a trough-like reservoir into which the lower edge of plate 26 extends. Thus it will be seen that because of the inclined relation of the plate 26 to the surfaces of rollers 20, 21, the glue which is carried around by these surfaces tends to form what may be termed an auxiliary reservoir from which the glue is transferred continuously and directly to the applicator roller 7. It will also be seen that any excess glue in this auxiliary reservoir is forced, because of the inclination of plate 26, down into the main reservoir 24 through the spaces between the rollers 20, 21, etc. Thus the plate 26 cooperates with the rollers 27 to insure a fresh supply of glue in the auxiliary reservoir at each rotation of shaft 19. This feature is particularly advantageous when mineral glues are employed, since, if no precautions are taken to insure this fresh supply, the space between the rollers 7, 20, 21, etc. after a short time will become clogged with the excess glue carried by the rollers and will dry out and form a hard glass-like binder between the surfaces of the rollers and in time will prevent their proper functioning. It will also be clear from the foregoing that the depth of the glue actually transferred to roller 7 from the auxiliary reservoir between the rollers is determined by the depth of the notch 39 in the lower edge of plate 26 which acts as a knife edge to scrape off from the roller 7 any solidified or excess glue. This excess glue, due to the proximity of roller 7 to rollers 20, 21 and because of the direction of rotation, is transferred to the surface of the feed rollers and returned to the glue pot where it mixes with fresh glue. If rollers 20, 21, etc. were rotating in the opposite direction to that shown, the excess glue would accumulate between the applicator and feed rollers and might leak by gravity on to the wrapping machinery proper.

Plate 26 allows glue to be applied from reservoir 24 by means of rollers 20, 21, etc. to the greater portion of the surface of roller 7 except for the portions near the ends of roller 7 where the extensions 32 bear. As a result of this construction the glue is confined to the surface of the roller and is prevented from running down the sides thereof. If it is desired another plate 50 may be adjustably mounted by means of screws 51 on plate 26 to further regulate the effective depth of notch 39 and consequently the depth of the glue transferred to roller 7.

On the right hand face of block 37 there is fastened by screws 28 a plate 29, the lower edge of which is in the form of a comb as shown clearly in Fig. 5 having teeth which register in the spaces between the gluing rollers 20, 21. The purpose of the teeth 30 is to prevent the glue from flowing into and filling the space between the rollers 20, 21 and the plate 26, which might result in a greater quantity of glue being applied to the roller 7 than is required, and might also cause leakage of this excess glue over the left-hand wall 49 of the glue pot. Plate 29 is also provided at its sides with the two long teeth 31 which embrace a substantial portion of the hub 40 and prevent the glue from leaking over the side walls of the gluepot.

As shown in Fig. 2 the side flap 5 is just ready to undergo the gluing process. It will also be noted that the end flaps 41 and 42 (shown in folded position) do not meet. It is necessary therefore in sealing containers of this character to insure that the flaps 5, when glued, do not adhere to the contents of the container exposed in the space between the end flaps. For this purpose the gluing mechanism is arranged to apply glue to the flaps 5 only on those portions of the surfaces which come in contact with the end flaps 41 and 42. As hereinabove described, the gluing roller 7 as well as the rollers 20, 21, etc. are journalled in the arms 9 which are adapted to be raised and lowered at the proper intervals by means of the cam having the raised portion 16. Cam 15 fixed to shaft 27 which is journalled in side plate 12 and is adapted to be driven by means of gear 18 at a predetermined speed with regard to the speed of movement of the chain 2. The gearing may be so designed that the raised portion 16 of the cam engages the roller 14 just prior to the instant that the free edge of flap 42 is about to pass under the applicator roller 7. Similarly the length of the raised portion 16 is such that the roller 14 and consequently the rollers 7 and rollers 20, 21, etc. are maintained in a raised position until the free edge of flap 41 is about to pass under the rollers 7. By means of this construction the applicator rollers 7 are out of contact with the side flaps for a space corresponding to that between the edges of the flaps 41 and 42. This mounting of both the applicator roller and feed rollers in a rocking frame enables the feed rollers to be moved at any time out of the paste reservoir 49 whereby all the rollers may be readily cleaned and, if necessary, adjusted.

From an inspection of Fig. 1 it will be noted that the guide plate 17 has a depression 43 at the point where it registers with the roller 7. The purpose of this depression is to prevent the applicator roller 7 which is covered with glue from coming in contact with the plate 17 when the flaps 5 pass beyond the gluer. For this purpose the lowered portion of the cam 15 is so designed that when the follower 14 is resting thereon the

roller 7 is out of engagement with the depression 43. Fig. 1 also shows the manner in which the glue is applied to the roller 7 and is retained within the pot 24. It will be noted that a single solid roller might be used in place of the separate rollers 20, 21. However, when separated rollers 20, 21, etc. are employed, most of the excess glue is allowed to fall down into the pot between the rollers as indicated in Fig. 1 by the shaded portion 44, and leakage over the edge of the gluepot is entirely avoided.

After the side flaps have been sealed in the manner above described the charged container moves forwardly and by suitable means the flaps 5 are folded and sealed to the end flaps 41, 42, after which other desired operations may be performed prior to discharge of the container from the machine.

While in the foregoing description the invention is described in its preferred embodiment, it is understood that it is susceptible of various modifications which will be apparent to those familiar with the art to which the invention relates.

What I claim is:

1. In a device for coating a surface with a layer of liquid adhesive, a reservoir containing a supply of said adhesive, a constantly rotating roller for directly applying an even layer of said adhesive to said surface, another roller rotating in said adhesive in the same direction as the first mentioned roller for continuously and directly transferring a supply of said adhesive from said reservoir to the first mentioned roller and means placed between said rollers for regulating the amount of adhesive transferred to the said first mentioned roller.

2. In a device for automatically coating a surface with an adhesive substance, a reservoir containing a supply of mineral glue, a rotating applicator roller, a rotating feed roller for directly transferring a quantity of said mineral glue from said reservoir to said applicator roller and means co-operating with both said rollers to limit the quantity of glue transferred to said applicator roller and for maintaining a fresh supply of glue between the co-operating surfaces of said rollers.

3. In a device for automatically coating a surface with an adhesive substance, a reservoir containing a supply of said substance, an applicator roller, a feed roller adjacent to but separated from said applicator roller, means for rotating said feed roller in the same direction as said applicator roller to bridge the space between said rollers with a continuous and fresh supply of glue from said reservoir, and means mounted between said rollers for regulating the depth of the layer of glue on said applicator roller and for preventing hardening and accumulation of excess glue thereon.

4. In a device for coating surfaces with an even layer of glue, a reservoir containing a supply of said glue, an applicator roller, a feed roller adjacent to said applicator roller, means for rotating said feed roller to fill a portion of the sace between said rollers with a continuous and fresh supply of glue from said reservoir, and means co-operating with both said rollers to regulate the depth and width of the layer of glue on said applicator roller, said last mentioned means being so mounted with relation to said rollers to prevent the hardening and accumulation of excess glue thereon.

5. In a device for coating surfaces with an even layer of a mineral glue, an applicator roller, a reservoir containing a supply of said glue, a feed roller adjacent to said applicator roller, and scraper means positioned between said rollers for maintaining a fresh supply of glue between said rollers and for preventing the hardening and accumulation of excess glue on said roller.

6. In a device for coating surfaces with an even layer of glue, a reservoir having a supply of said glue, said glue containing a large percentage of water glass, a plurality of rollers adapted to be rotated in the same direction, one of said rollers acting to transfer a layer of glue from said reservoir directly to the other of said rollers, and a scraper between said rollers for preventing the hardening and accumulation of excess glue on said one of said rollers.

7. In a device for coating container enclosing flaps with glue, a main reservoir containing a supply of said glue, an applicator roller, a plurality of spaced feed rollers so mounted with relation to said applicator roller that an auxiliary supply reservoir is formed between the peripheries of the feed rollers and the periphery of said applicator roller, and a plate positioned between said feed rollers and said applicator roller for regulating the amount of glue reaching said applicator roller from said auxiliary reservoir, said plate being also adapted to prevent the accumulation of excess glue in said auxiliary reservoir.

8. In a device for coating container enclosing flaps with glue comprising a main reservoir containing a supply of said glue, an applicator roller, a feed roller, means for rotating said rollers continuously in the same direction, said rollers while rotating adapted to maintain a fresh supply of glue between a portion of their peripheries, a plate having a portion of one of its edges notched, the remaining portions of the plate edge being in the form of knife edge scrapers, means for mounting said plate with said scraper portions bearing upon corresponding portions of the periphery of said applicator roller, said plate when so mounted serving to regulate the depth of the glue on said applicator roller

and to return excess glue through the spaces between said roller peripheries and into said main reservoir.

9. In a gluer mechanism, an applicator roller, a glue reservoir, a plurality of spaced feed rollers, means for rotating all of said rollers in the same direction to transfer from said reservoir to said applicator roller a continuously fresh supply of glue, and a plate having knife edge portions bearing on the surface of said applicator roller, said plate being so mounted with relation to said applicator roller and said feed rollers that excess glue between said rollers is forced into said reservoir through the spaces between said feed rollers.

10. In a paster mechanism, a paste applicator roller, a plurality of paste feed rollers, a paste reservoir, means for rotating said feed rollers to transfer a layer of paste of definite width and depth from said reservoir to said applicator roller and for directly returning to said reservoir substantially all excess paste on said applicator roller.

11. In a machine of the character described, means for continuously moving a container to be sealed, means for guiding and supporting the enclosing flaps of said container, a paster mechanism comprising a paste applicator roller, a feed roller having a plurality of sections and a paste reservoir all mounted above the moving container, and means for rotating said rollers whereby a layer of paste is transferred directly from said feed roller to said applicator roller and then to each container flap while the same is in motion.

12. In a machine of the character described, a paster mechanism comprising an applicator roller, a plate cooperating with said roller for determining the thickness of the layer of paste thereon, a plurality of spaced feed rollers, a paste reservoir, means for rotating said feed rollers directly to transfer a layer of paste to said applicator roller, a plate having a knife edge for determining the width of the transferred layer and a notch for determining the depth of the layer, said plate co-operating with said feed rollers to cause substantially all excess paste to be returned to the said reservoir.

13. In a paster mechanism an applicator roller, paste feeding means comprising a plurality of spaced rollers, a reservoir containing a supply of paste in which said spaced rollers are partially immersed, and means for rotating all of said rollers to cause a layer of paste to be transferred directly from each spaced roller to said applicator roller.

14. In a paster mechanism, a paste applicator roller, a plurality of paste feed rollers, means for rotating all of said rollers to cause a layer of paste to be transferred from said feed rollers to said applicator roller, a paste reservoir, a plate mounted between said applicator roller and said feed rollers, said plate having a notch in one edge for determining the depth and width of the transferred layer, said plate also co-operating with said feed rollers to cause substantially all excess paste to be returned to said reservoir.

15. In a machine of the character described, means for continuously feeding through a container to be sealed a "top-gluer" comprising a glue applicator roller, a glue reservoir and a plurality of feed rollers for directly transferring a layer of glue from said reservoir to said applicator roller, means for guiding and supporting a container enclosing flap beneath said applicator roller, means for rotating said applicator roller whereby said layer of glue is applied to said flap while the same is moving through the machine, and means for returning to said reservoir substantially all the excess glue between the applicator roller and said feed rollers.

16. In a machine of the character described, means for coating container enclosing flaps with an adhesive substance comprising an applicator roller positioned above the flap to be coated, a reservoir adjacent to said applicator roller, supply means for transferring from said reservoir to said applicator roller, a layer of adhesive substance, a rocker frame in which said applicator roller and said supply means are rotatably mounted, and cam means for periodically raising and lowering said frame.

17. In a machine of the character described, an applicator roller, auxiliary paste feeding rollers, means for mounting both said applicator roller and said auxiliary rollers above the material to be pasted, said last mentioned means comprising a rocker frame in which said rollers are rotatably mounted, and means for rocking said frame at predetermined intervals to remove said applicator roller from the material to be pasted.

18. In a machine of the character described, a paster mechanism comprising a paste applicator roller, a plurality of spaced feed rollers, a rocker frame in which all of said rollers are rotatably mounted, a paste reservoir in which said feed rollers are adapted to rotate, means for rotating said feed rollers to transfer from said reservoir a layer of paste to said applicator roller, means for rocking said frame independently of the rotation of said rollers, and means also mounted on said rocking frame co-operating with all of said rollers to cause substantially all excess glue between said rollers to be returned to said reservoir.

19. In a wrapping and sealing machine paster mechanism comprising an applicator roller, a plurality of spaced rollers for transferring paste from said reservoir directly to said applicator roller, a comb-like plate having the teeth thereof registering with the

spaces between said feed rollers for preventing excess glue from reaching said applicator roller and operating portions of the wrapping machine.

20. In a paster mechanism a reservoir containing paste, an applicator roller, a plurality of spaced feed rollers partially immersed in the paste in said reservoir, means for rotating said feed rollers to transfer paste from said reservoir to said applicator roller, means co-operating with said feed rollers on one side for limiting the quantity of paste carried by said feed rollers, and means co-operating with said feed roller and said applicator roller for further limiting the quantity of paste transferred to said applicator roller and for causing substantially all excess paste to be returned to said reservoir.

21. In a paster mechanism a reservoir containing paste, means for feeding paste from said reservoir comprising a series of discs mounted for rotation on a common shaft, means co-operating with said feeding means for causing excess paste to return to said reservoir through the spaces between said discs and without affecting the quantity of paste on the edges of said discs and a roller for collecting the paste directly from said disc and transferring it to an article to be pasted.

22. In a paster mechanism a reservoir containing paste, means for feeding paste from said reservoir comprising a series of discs mounted for rotation on a common shaft and spaced to provide paste returning channels, a comb-like plate having teeth which register with spaces between said discs to provide a barrier for excess paste and special guard teeth for preventing the paste from said reservoir reaching the bearings provided for said discs.

23. The combination in a wrapping and sealing machine of a container to be sealed, said container having end flaps and side flaps, means for continuously moving said container through said machine, a paster mechanism for said side flaps comprising feed rollers, an applicator roller and a paste reservoir removably mounted above the moving container, means for rotating said rollers to transfer a continuous layer of paste from said reservoir to said applicator roller and for applying to each side flap a layer of paste and means for raising said applicator roller at intervals in order to apply paste to predetermined portions of the flap surface only.

24. The combination in a wrapping and sealing machine of a container to be sealed, said container having end flaps and side flaps, a paster mechanism, means for said container to cause said side flaps to register with said paster mechanism, said paster mechanism comprising an applicator roller and a plurality of feed rollers, a rocking frame in which said applicator roller and said feed rollers are rotatably mounted, a cam for actuating said rocking frame, means for rotating said rollers and said cam to transfer a continuous layer of paste from said feed rollers to said applicator roller, and for removing said applicator roller from contact with said side flaps during the portion of their surfaces corresponding to spaces between said folded end flaps.

25. In a gluer mechanism, a glue reservoir, a glue applicator roller, a glue feed roller in proximity to said applicator roller, means for rotating said feed roller to transfer an even layer of glue directly to said applicator roller and means for causing excess glue on said applicator to be transferred back to said feed roller and into said reservoir.

26. In a gluer mechanism a surface to be coated with glue, a glue pot, a glue applicator roller, a glue feed roller, means for rotating both said rollers in the same direction to transfer a layer of glue directly from said gluepot to said applicator roller, means for moving said surface into engagement with said applicator roller to cause said layer of glue to be applied to said surface, and means co-operating with said applicator and feed rollers for causing the glue which remains on said applicator roller after engagement with said surface to be transferred back to the feed roller and into the gluepot.

27. In a gluer mechanism a gluepot, a glue applicator roller, a glue feed roller, means for rotating said feed roller to transfer from said gluepot a quantity of glue directly to said applicator roller and a device for regulating the quantity of glue transferred to said applicator roller and for causing excess glue on said applicator roller to be transferred back to said feed roller and into said reservoir.

In testimony whereof, ERNEST D. ANDERSON has signed his name to this specification.

ERNEST D. ANDERSON.