I/We claim:

1. A system (100) for generating shock waves in a well bore (102), the system (100) comprising:

a versa fracking gun (110), wherein the versa fracking gun (110) comprises:

a cartridge (200) having a hollow cavity, an open end (216), and a closed end (218);

a gas filled cylinder (202) disposed inside the cavity of the cartridge (200), wherein the gas filled cylinder (202) has an internal pressure maintained below a pressure at a position of deployment of the versa fracking gun (110) inside the well bore (102); and

an explosive pod (204) positioned on an inner surface of the gas filled cylinder (202) to support explosive charges (206); and

a coupler (112) coupled to the open end (216) of the cartridge (200), wherein the coupler (112) is to detachably couple the versa fracking gun (110) with a wire line (106) of an external unit (104), wherein the coupler (112) comprises:

a first end (222) to receive the wire line;

a second end (224); and

an adapter (226) provided at the second end (224) of the coupler (112) to couple to the wire line (106), wherein, the adapter (226) receives signals from the wire line (106) and supply the signals to the gas filled cylinder (202), and wherein the adapter (226) isolates the wire line (106) from the gas filled cylinder (202).

2. The system (100) as claimed in claim 1, wherein the versa fracking gun (110) comprises:

a detonator (208) positioned on the inner surface of the gas filled cylinder (202) to detonate the explosive charges (206); and

a first valve (212) provided on a body of the gas filled cylinder (202) to couple to the adapter (226) and to the detonator (208).

3. The system (100) as claimed in claim 2, wherein the adapter (226) comprises:

an input link, provided at a first end (228) of the adapter (226), to couple to and to receive signals from the wire line (106); and

an output link (232), provided at a second end (203) of the adapter (226) and extending out from the second end (224) of the coupler (112), to couple to the first valve (212) to supply the signals to the detonator (208) positioned inside the gas filled cylinder (202).

4. The system (100) as claimed in claim 1, wherein a surface of the cartridge (200) in proximity of the explosive pod (204) forms a first region (234) of high stress concentration, and wherein a surface of the gas filled cylinder (202) in proximity of the explosive pod (204) forms a second region (300) of high stress concentration, and wherein the first region (234) of high stress concentration overlaps the second region (300) of high stress concentration.

5. The system (100) as claimed in claim 3, wherein the first region (234) of high stress concentration of the cartridge (200) has thickness less than thickness of the remaining surface of the cartridge (200).

6. The system (100) as claimed in claim 3, wherein the second region (300) of high stress concentration of the gas filled cylinder (202) has thickness less than thickness of the remaining surface of the gas filled cylinder (202).

7. The system (100) as claimed in claim 1, wherein the gas filled cylinder (202) comprises a second valve (214) provided at a body of the gas filled cylinder (202) to maintain the internal pressure of the gas filled cylinder (202).

8. The system (100) as claimed in claim 1, wherein the versa fracking gun (110) comprises a circlip (236) provided on an inner surface of the cartridge (200) to attach the gas filled cylinder (202) with the cartridge (200).

9. The system (100) as claimed in claim 1, wherein the gas filled cylinder (202) has one of a non-inflammable gas, inert gas, mixture of gases, and vacuum.

10. The system (100) as claimed in claim 1, wherein the system (100) comprises a plurality of versa fracking guns (110) coupled in series.

5

Date 29 September 2016

KONPAL RAE
IN/PA-1228
Agent for the Applicant

To,
The Controller of Patents
The Patent Office at Chennai

TECHNICAL FIELD

[0001] The present subject matter relates, in general, to versa fracking for oil and gas production, and particularly to versa fracking for oil and gas production by shock waves.

BACKGROUND

[0002] Fracking is a process to create cracks in the walls of a well bore that results in release of oil and gas trapped in the reservoirs, hydrates, and shales present below the earth surface. Further, fracking is performed in the well bores that are at last stage of production or are dried out to enhance recovery of oil or gas. For enhancing the recovery of oil or gas, the fracking is performed to elongate the existing perforations or to create new cracks that result in release of remaining oil and gas.

BRIEF DESCRIPTION OF DRAWINGS

[0003] The features, aspects, and advantages of the subject matter will be better understood with regard to the following description, and accompanying figures. The use of the same reference number in different figures indicates similar or identical features and components.

[0004] Fig. 1 illustrates a system implemented in a well bore for generating shock waves, in accordance with an implementation of the present subject matter.

[0005] Fig. 2 illustrates a cross-sectional view of the system of Fig. 1, in accordance with an implementation of the present subject matter.

[0006] Fig. 3 illustrates a line diagram of a gas filled cylinder implemented in the system of Fig. 1, in accordance with an implementation of the present subject matter.

[0007] Fig. 4 illustrates an assembly of a cartridge with the gas filled cylinder installed concentrically inside the cartridge, in accordance with an implementation of the present subject matter.

[0008] Fig. 5 illustrates a procedure of performing versa fracking inside the well bore by the system of Fig. 1, in accordance with an example of the present subject matter.

[0009] Fig. 6 illustrates a graph representing variation of pressure of the shock wave with respect to time during generation of shock wave by the system of Fig. 1, in accordance with an implementation of the present subject matter.

DETAILED DESCRIPTION

[0010] Generally, shock waves are used for fracking inside well bores and to increase recovery of oil and gas during production. The existing fracking systems utilize different methods for generating shock waves. For example, spark gap principle may be utilized to generate shock waves. However, the electrodes used for the spark gap are short lived due to high heat inside the well bore and also due to the electrodes get corrosion from the reactions of fluids and gases present inside the well bore. Several feeder mechanisms were utilized to change the electrodes. Such feeder mechanisms have made the existing system costly and difficult to implement.

[0011] Few existing fracking systems generate shock waves by utilizing electromagnetic waves or by hydraulic means. However, the shock waves generated by these methods are radial and lack focus. In few other existing systems, the shock waves are generated from a multi-pulsed source. Such systems include sealed chambers divided by valves, differential pistons, and an opening on the cylinder walls. However, such systems are complicated to implement. In certain other existing systems, shock waves are generated by exploding a balloon inside the well bore. The balloon is filled with air at atmospheric pressure. The explosion creates a decrease in pressure inside the well bore and a shock wave is generated. However, the energy liberated from the explosion of the balloon is insufficient to provide an effective impact on the walls of the well bore. Further, the energy from the explosion is neither focused nor unidirectional.

[0012] Some existing fracking systems may also utilize explosives filled in a cylinder to explode inside the well bore to generate shock waves. Such systems

are directly integrated to power line for receiving detonating signals from an external unit positioned outside the well bore. However, the explosion may result in damage to the power line. As a result, the replacement of the power line makes the existing fracking system costly. Further, the explosion may break one or more portions of the existing fracking system. The broken portions may plunge in the well bore and are difficult to retrieve. Further, the broken portions resulting from the explosion may choke the well bore if not retrieved.

[0013] The subject matter disclosed herein is directed to a system for generating shock waves in a well bore. The system includes a versa fracking gun and a coupler for coupling the versa fracking gun with a wire line carrying signals from an external unit. The coupler isolates the wire line from the versa fracking gun and thereby, prevents any damage to the wire line during an explosion inside the versa fracking gun. Further, the versa fracking gun utilizes a dual layer high stress concentration regions to generate shock waves in the well bore followed by blast waves of negative pressure. The utilization of dual layer high stress regions in the versa fracking gun results in elongation of existing perforations, creation of primary and secondary fractures, and also opening of clogged pores.

[0014] In accordance with an implementation of the present subject matter, the versa fracking gun includes a cartridge having a hollow cavity, an open end, and a closed end. Further, the versa fracking gun includes a gas filled cylinder and an explosive pod positioned on an inner surface of the gas filled cylinder to support explosive charges. The gas filled cylinder is disposed inside the cavity of the cartridge and has an internal pressure maintained below a pressure at a position of deployment of the versa fracking gun inside the well bore. The coupler detachably couples the versa fracking gun with a wire line of an external unit. The coupler includes a first end, a second end, and an adapter. The first end receives the wire line. The adapter is provided at the second end of the coupler to couple to the wire line. The adapter receives signals from the wire line and supply the signals to the gas filled cylinder. Thus, the adapter isolates the wire line from the gas filled cylinder form any impact of the explosion that may occur in the gas

filled cylinder. As result, the system of the present subject matter saves additional of cost replacement of wire line.

[0015] In accordance with an implementation of the present subject matter, a surface of the cartridge in proximity of the explosive pod forms a first region of high stress concentration. Further, a surface of the gas filled cylinder in proximity of the explosive pod forms a second region of high stress concentration. The first region of high stress concentration overlaps the second region of high stress concentration. Thus, forming a dual layer of high stress concentration. During an explosion in the gas filled cylinder, the dual layer of high stress concentration results in generation of shock waves that are unidirectional and focused in the direction of perforations present inside the well bore. As a result, impact of the shock waves increases which furthers increases efficiency of the system.

[0016] The present subject matter aims at generating shock waves inside the well bore. The system for generating shock waves may be introduced in the well bore by integrally coupling the system with a geophysical unit positioned outside the well bore. Thus, the system may utilize capabilities of the geophysical unit to produce shock waves in a vertical well bore as well as in a horizontal well bore. Further, for multiple iteration of generating shock waves, the system requires replacement of used versa fracking gun with a fresh versa fracking gun by decoupling of the used versa fracking gun from the wire line and coupling fresh versa fracking gun to the wire line. Thus, the system of the present subject matter is simpler, effective, and cheap to implement as compared to existing versa fracking systems. As a result, the system of the present subject matter enables versa fracking in diversified fields, such as, conventional reservoirs, hydrates, and shale reservoirs, for enhanced recovery of oil and gas.

[0017] The manner in which the system of the present subject matter shall be implemented has been explained in details with respect to Fig. 1 to Fig. 6. It should be noted that the description and figures merely illustrate the principles of the present subject matter.

[0018] Fig. 1 illustrates a system 100 implemented in a well bore 102 for generating shock waves, in accordance with an implementation of the present

subject matter. As shown in Fig. 1, the system 100 is integrally coupled to an external unit 104, for example, a geophysical logging unit, by a wire line 106. The geophysical logging unit 104 installed on the earth surface introduces the system 100 in the well bore for elongation of existing perforations 108, creation of primary and secondary fractures and also opening of clogged pores. The system 100 includes a versa fracking gun 110 and a coupler 112 for detachably coupling the versa fracking gun 110 to the wire line 106. The versa fracking gun 110 generates shock waves 114 in a direction of existing perforations 108 by creating explosion against the existing perforations 108. The versa fracking gun 110 receives detonating signals for the explosion from the geophysical logging unit 104 through the wire line 106. The system 100 is explained in detail with reference to Fig. 2 and Fig. 3. For the purpose of brevity, Fig. 2 and Fig. 3 are described in conjunction.

[0019] Fig. 2 illustrates a cross-sectional view of the system 100, in accordance with an implementation of the present subject matter. Fig. 3 illustrates a line diagram of the gas filled cylinder 202, in accordance with an implementation of the present subject matter. As mentioned previously, the system 100 includes the versa fracking gun 110 and the coupler 112 for detachably coupling the versa fracking gun 110 with the wire line 106. As shown in Fig. 2, the versa fracking gun 110 includes a cartridge 200, a gas filled cylinder 202, explosive pods 204, explosive charges 206, a detonator 208, a detonating wire 210, a first valve 212, and a second valve 214.

[0020] The cartridge 200 has a structure of a hollow cavity and has an open end 216 and a closed end 218. The gas filled cylinder 202 is disposed inside the cavity of the cartridge 200. The gas filled cylinder 202 has an internal pressure maintained below a pressure at a position of deployment of the versa fracking gun 110 inside the well bore 102. The explosive pods 204 positioned on an inner surface of the gas filled cylinder 202 to support explosive charges 206.

[0021] In an example implementation, a circlip 236 is provided on an inner surface of the cartridge 200 to rigidly attach the gas filled cylinder 202 inside the cartridge 200.

[0022] In an example implementation, the closed end 218 of the cartridge 200 is provided with a cap 238, as shown in Fig. 2. The cap 238 is provided as an additional layer below the closed end 218 to prevent falling of any broken component resulting from the explosion inside the gas filled cylinder 202.

[0023] In an example implementation, the explosive pods 204 have linear orientation for performing versa fracking for linear shaped perforations.

[0024] In an example implementation, the explosive pods 204 have spiral orientation to produce spiral shock waves for spiral shaped perforations.

[0025] In an example implementation, slots (not shown in fig. 2) are provided at the neck of the gas filled cylinder 202 by which the motion of the explosive pods 204 are constrained inside the gas filled cylinder 202.

[0026] The detonator 208 positioned on the inner surface of the gas filled cylinder 202 is coupled to the explosive charges 206 by connecting wires 220. The detonator 208 detonates the explosive charges 206 based on the detonating signals received form the wire line 106.

[0027] Further, a surface of the cartridge 200 in proximity of the explosive pods 204 forms a first region 234 of high stress concentration, as shown in Fig. 2. A surface of the gas filled cylinder 202 in proximity of the explosive pods 204 forms a second region 300 of high stress concentration, as shown in Fig. 3. The second region 300 ruptures at the time of explosion inside the gas filled cylinder 202. The rupturing of the second region 300 of the gas filled cylinder 202 is followed by rupturing of the first region 234 of the cartridge 200. The rupturing of the first region 234 and the second region 300 results in contact of high pressure fluid/gas present in the well bore 102 with the low pressure gas present in the gas filled cylinder 202 which further results in formation of differential pressure in the gas filled cylinder 202 and the well bore 102. The differential pressure in the gas filled cylinder 202 and the well bore 102 results in the formation of shock wave that traverses through the exiting perforations 108 inside the well bore 102.

[0028] Fig. 4 illustrates an assembly of the cartridge 200 with the gas filled cylinder 202 installed concentrically inside the cartridge 200, in accordance with an implementation of the present subject matter. As shown in Fig. 4, the first

region 234 of high stress concentration on the cartridge 200 overlaps the second region 300 of high stress concentration of the gas filled cylinder 202. The overlapped first region 234 and the second region 300 act as a dual layer of diaphragms that assists in generation of focused and unidirectional shock wave.

[0029] The purpose of explosion is to create a sudden contact between high pressure fluid/gas present in the well bore 102 and the low pressure gas present in gas filled cylinder 202 to create a condition of difference pressure in the gas filled cylinder 202 and the well bore 102 that further generates shock wave. The rupturing of dual layer of diaphragms creates two consecutive slits for propagation of shock waves from the versa fracking gun 110. The shock wave propagating through two consecutive slits are more focused and unidirectional as compared to a single slit formed by rupturing of a single diaphragm.

[0030] In an example implementation, the first region 234 of high stress concentration of the cartridge 200 has thickness less than thickness of the remaining surface of the cartridge 200

[0031] In an example implementation, the second region 300 of high stress concentration of the gas filled cylinder 202 has thickness less than thickness of the remaining surface of the gas filled cylinder 202.

[0032] In an example implementation, the first region 234 and the second region 300 are case hardening surfaces of the cartridge 200 and the gas filled cylinder 202, respectively.

[0033] The first valve 212 is provided on a body of the gas filled cylinder 202. The first valve 212 enables the detonator 208, positioned inside the gas filled cylinder 208, to receive the detonating signals from the wire line 106 though the coupler 112. The first valve 212 couples the detonating wire 210 extending from the detonator 208 with the coupler 112 to receive the detonating signals.

[0034] The second valve 214 is provided on the body of the gas filled cylinder 202 to maintain the internal pressure of the gas filled cylinder 202. In an example implementation, the gas filled cylinder 202 is filled with one of a non-inflammable gas, inert gas, mixture of gases. In another example implementation, the gas filled cylinder 202 has vacuum.

[0035] In an example implementation, the second valve 214 is a high temperature-high pressure valve.

[0036] In an example implementation, the pressure inside the gas filled cylinder 202 is increased/decreased by the second valve 214 using an external device.

[0037] In an example implementation, the internal pressure inside the gas filled cylinder 202 is maintained above the atmospheric pressure and below the pressure of the fluid/gas present inside the well bore 102

[0038] In an example implementation, the system 100 includes plurality of versa fracking guns 110 to propagate shock waves through a larger area inside the well bore 102. The plurality of versa fracking guns 110 are coupled in series, such that, such that a lower end of the versa fracking gun 110 is coupled to an upper end of the subsequent versa fracking gun. For example, the system 100 having a first versa fracking gun 110 and a second versa fracking gun 110. The first versa fracking gun 110 has an open end 216 coupled to the second end 224 of the coupler 112. The second versa fracking gun 110 has an open end coupled to a closed end 218 of the first versa fracking gun 110. Further, detonators 208 of both the first and second versa fracking guns 110 receive the detonating signals from the geophysical logging unit 104 though the wire line 106.

[0039] As shown in Fig. 2, the coupler 112 has a first end 222, a second end 224, and an adapter 226 provided inside the coupler for receiving signals from the wire line 106 and supply the signals to the gas filled cylinder 202. The first end 222 receives the wire line 106. The second end 224 of the coupler 112 is coupled to the open end 216 of the cartridge 200. The adapter 226 has a first end 228 and second end 230. The first end 228 of the adapter 226 is detachably coupled to the wire line 106. The second end 230 of the adapter 226 is attached to the second end 224 of the coupler 112.

[0040] Further, the adapter 226 has an input link (not shown in Fig. 2), and an output link 232. The input link is provided at a first end 228 of the adapter 226. The input link receives signals from the wire line 106. The output link 232 is provided at the second end 230 of the adapter 226. The output link 232 extends

out from the second end 216 of the coupler 112 and couples to the first valve 212 of the gas filled cylinder 202. The output link 232 supplies the signals to the detonator 208 positioned inside the gas filled cylinder 202. Thus, the adapter 226 isolates the wire line 106 from the gas filled cylinder 202. Therefore, during an explosion inside the gas filled cylinder 202, the coupler 112 prevents the wire line 106 from being affected or damaged by the explosion.

[0041] An example procedure to generate shock wave by the system 100 has been described in detail herein after. Fig. 5 illustrates a procedure 500 of performing versa fracking by the system 100 inside the well bore, in accordance with an example of the present subject matter.

[0042] At step 502, the versa fracking gun 110 is detachably coupled to the wire line 106 of the geophysical logging unit 104 by the coupler 112. At step 504, the well bore 102 is killed to prevent the flow of fluid from the well bore 102 during the versa fracking process. For killing, the well bore 102 is filled with a completion fluid and the versa fracking gun 110 is introduced in the well bore 102 and moved to a position of deployment by the geophysical logging unit 104. At step 506, the versa fracking gun 110 is oriented to focus the direction of the explosive pods 204 and the explosive charges 206 in the well bore 102 by the geophysical logging unit 104. At step 508, a detonating signal is received by the detonator 208 from the geophysical logging unit 104. The geophysical logging unit 104 transfers the detonating signal over the wire line 106. Thereafter, the detonating signal is propagated to the detonator 208 from the wire line 106 and through the adapter 226 and thereafter through the first valve 212.

[0043] At step 510, the detonator activates the explosive charges 206 to explode. The explosive pods 204 direct the impact of the explosion in a direction radially outside from the gas filled cylinder 202 and towards the overlapped first region 234 and the second region 300. At step 512, the overlapped first region 234 and the second region 300, acting as a dual layer of diaphragm for generating focused and unidirectional shock wave, rupture from the impact of explosion. The sudden rupture of the first region 234 and the second region 300 establishes an immediate contact between the high pressure fluid/gas present in the well bore

102 and the low pressure gas present in gas filled cylinder 202. The immediate contact between the high pressure fluid/gas and the low pressure gas results in high pressure gradient which further results in generation of a leading shock front of compressed wave.

[0044] Fig. 6 illustrates a graph 600 representing variation of pressure of the shock wave with respect to time during generation of shock wave by the system 100, in accordance with an implementation of the present subject matter. The graph 600 depicts a positive cycle 602 of a leading shock wave and a negative cycle 604 of blast wave. For example, the generated shock wave can follow a Friedlander waveform. During the positive cycle 604 of the Friedlander waveform 600, the shock wave generated by the versa fracking gun 110 passes through the perforations 108 present inside the well bore 102 or create primary or secondary new fractures in the walls of the well bore 102.

[0045] The shock wave in the positive cycle 602 is followed by the negative cycle 604 of blast wave. The generation of shock wave creates a vacuum at a center of the well bore 102. The vacuum results in generation of the blast wave having a direction of propagation towards the center of the well bore 102. Therefore the blast wave has an effect of pulling everything towards the center of the well bore 102. The shock wave creates fractures in the walls of the well bore 102 and the negative blast wave flow out the debris resulting from the fractures. Thus, the shock wave and the negative blast wave generated by the versa fracking gun 110 result in elongation of the existing perforations and unclogging of the blocked pores. Further, create primary and secondary fractures in the well bore 102 as well.

[0046] In an example implementation, the versa fracking gun 202 is retrieved from the well bore 102 as a single unit after the completion of the procedure 500 and replaced so as to generate a next cycle of shock waves.

[0047] Although the subject matter has been described with reference to specific embodiments, this description is not meant to be construed in a limiting sense. Various modifications of the disclosed embodiments, as well as alternate embodiments of the subject matter, will become apparent to persons skilled in the

art upon reference to the description of the subject matter. It is therefore contemplated that such modifications can be made without departing from the spirit or scope of the present subject matter as defined.

ABSTRACT

UNIFIED VERSA FRACKING DEVICE FOR ENHANCED RECOVERY FROM CONVENTIONAL RESERVOIRS, HYDRATES, AND SHALES

A system (100) for generating shock waves in a well bore (102) includes a versa fracking gun (110) and a coupler (112) for detachably coupling the versa fracking gun (110) to a wire line (106) from an external unit (104). The coupler (112) isolates the wire line (106) from the versa fracking gun (110). The versa fracking gun (110) includes a cartridge (200), a gas filled cylinder (202) having an internal pressure maintained below the pressure present inside the well bore (102). Further, the versa fracking gun (110) includes explosive pods provided with explosive charges to rupture the high stress concentrated regions present on the surface of the cartridge (200) and the gas filled cylinder (202) to generate shock waves. The generated shock waves are followed by negative blast waves that results in elongation of existing perforations, creation of primary and secondary fractures, and also opening of clogged pores.

[To be published with Fig. 2]

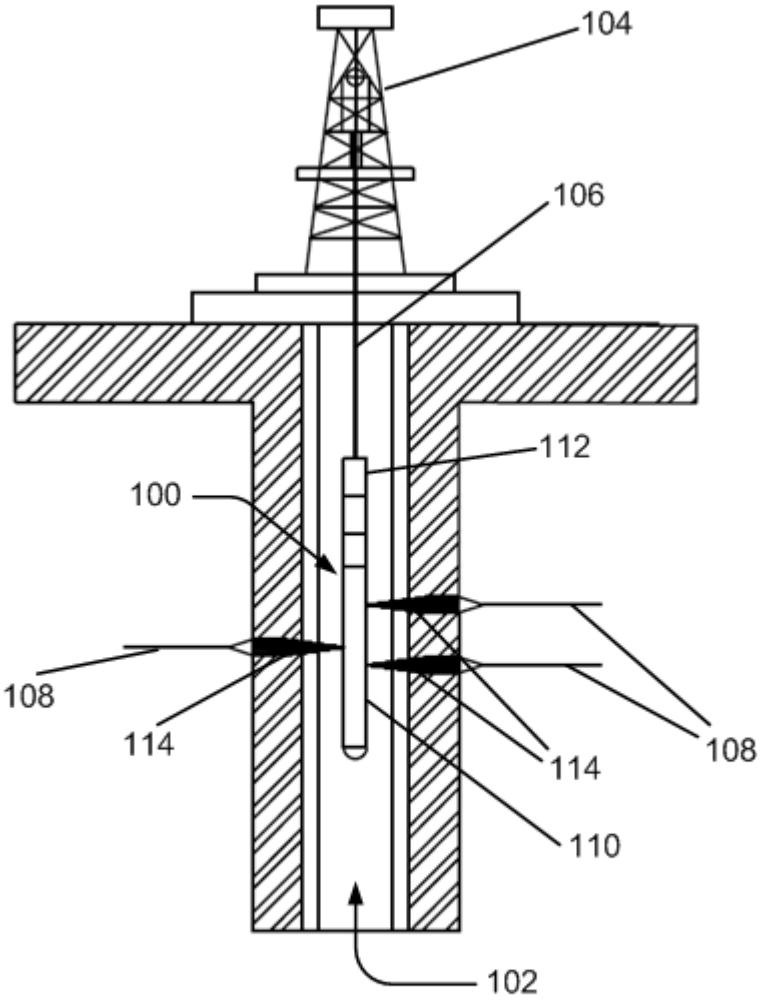

Fig. 1

KONPAL RAE
IN/PA-1228
Agent for the Applicant

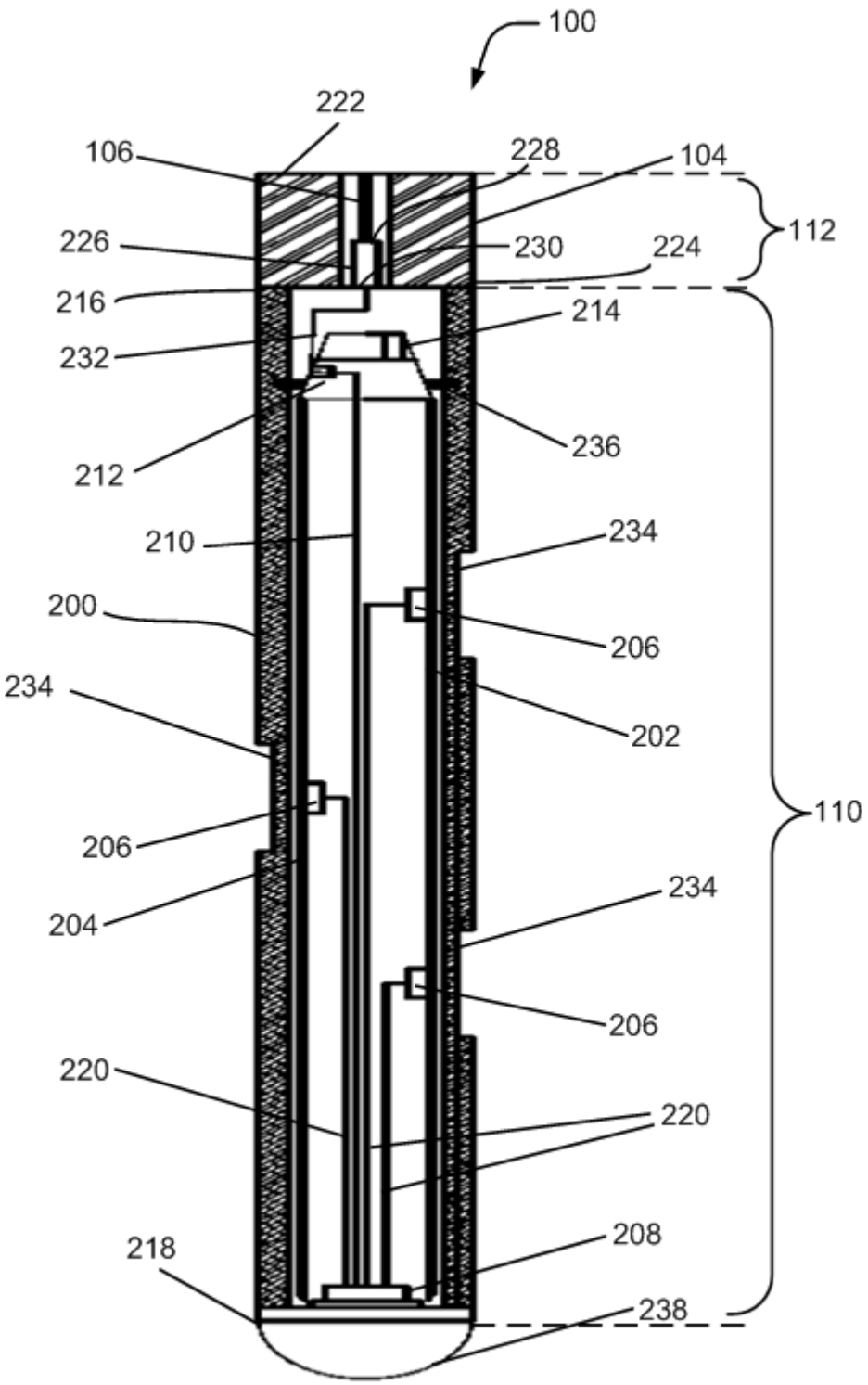
100
222
106
228
104
112
226
230
224
216
214
232
236
212
210
234
200
206
234
202
110
206
234
204
206
220
220
208
218
238

Fig. 2

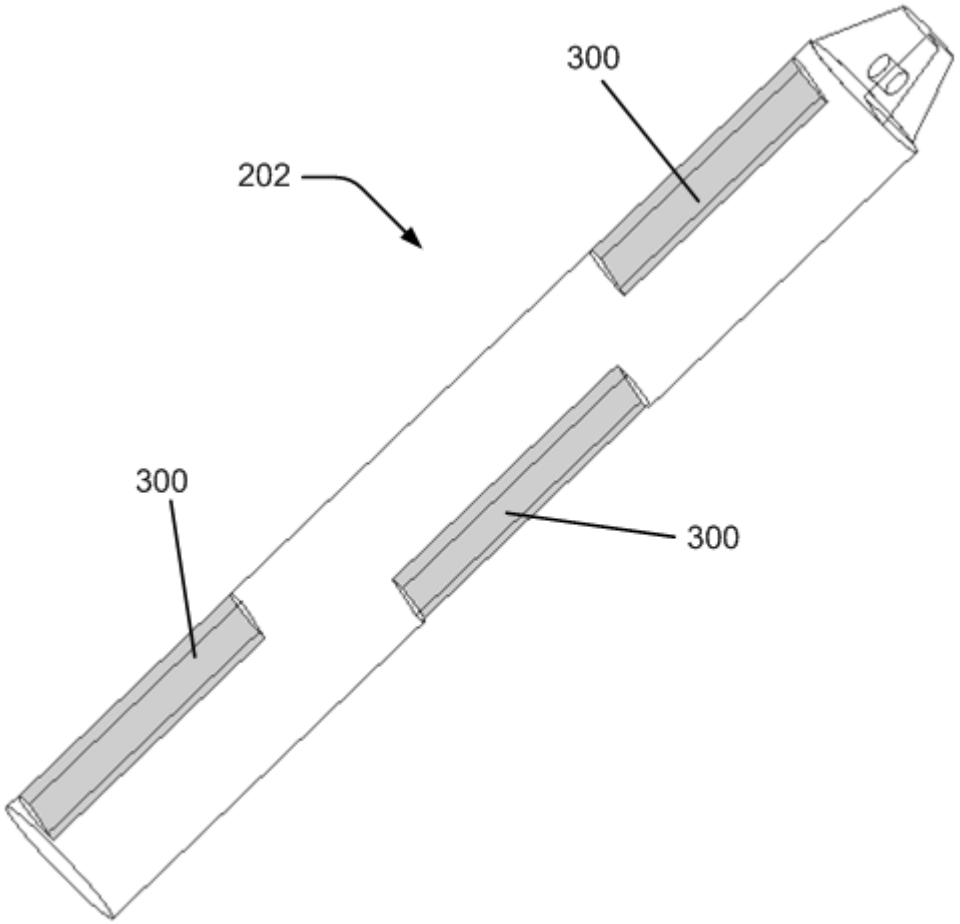

Fig. 3

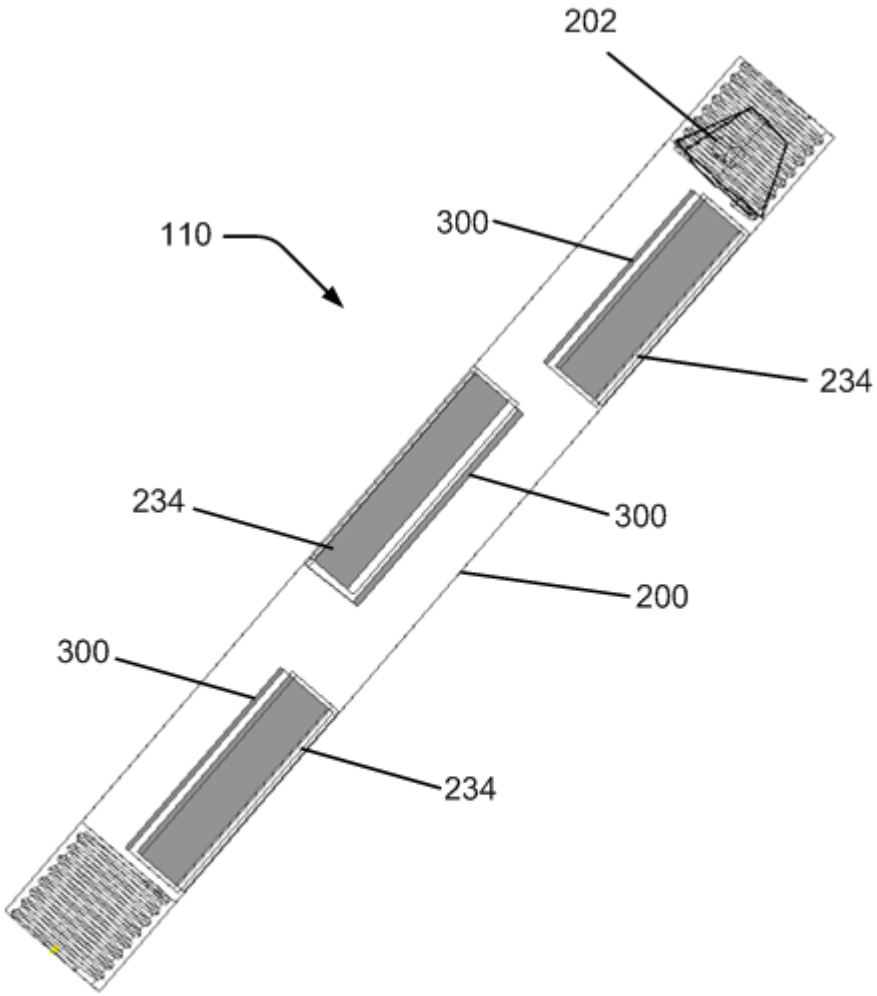

Fig. 4

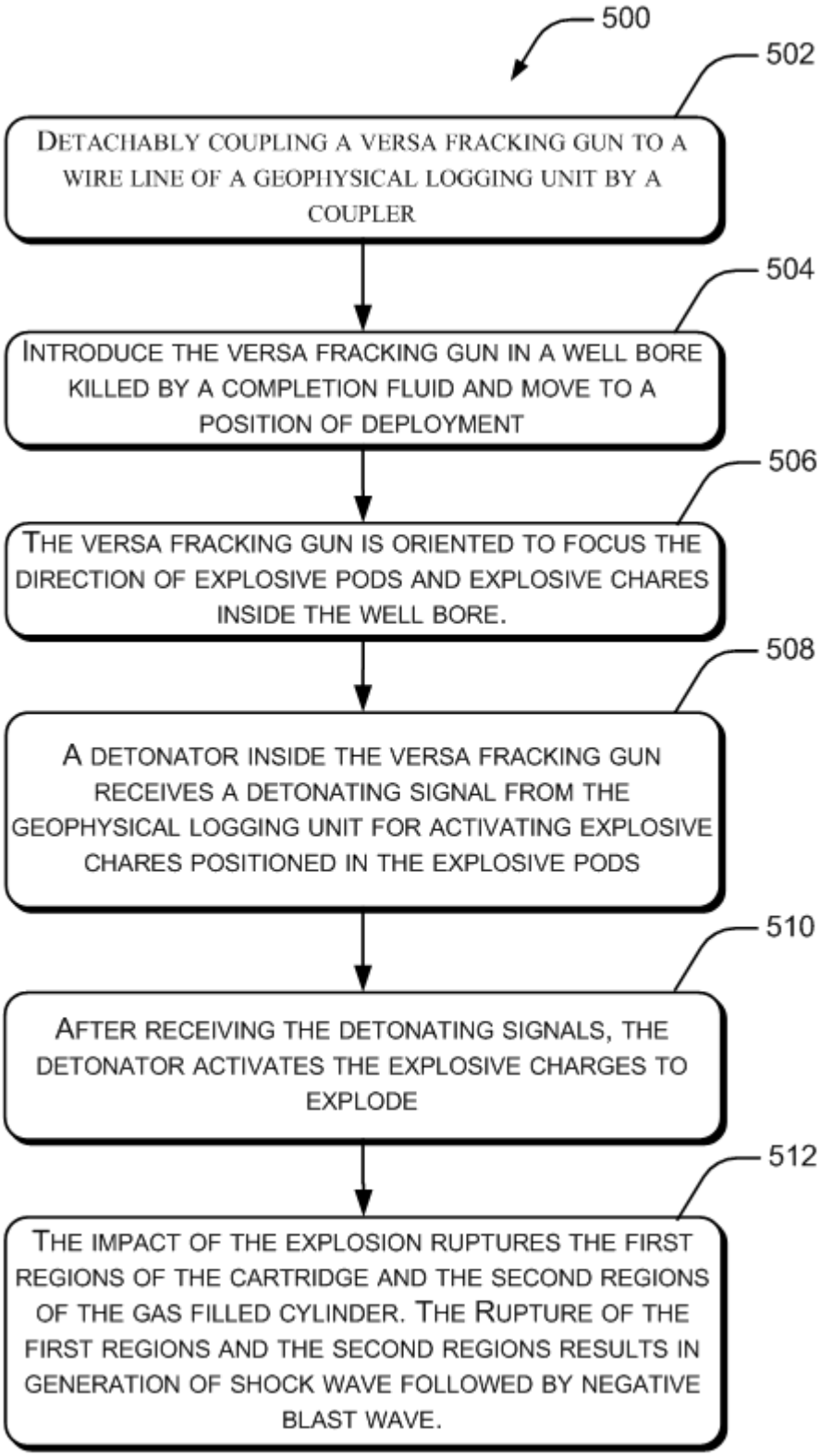
500
502
DETACHABLY COUPLING A VERSA FRACKING GUN TO A WIRE LINE OF A GEOPHYSICAL LOGGING UNIT BY A COUPLER
504
INTRODUCE THE VERSA FRACKING GUN IN A WELL BORE KILLED BY A COMPLETION FLUID AND MOVE TO A POSITION OF DEPLOYMENT
506
THE VERSA FRACKING GUN IS ORIENTED TO FOCUS THE DIRECTION OF EXPLOSIVE PODS AND EXPLOSIVE CHARES INSIDE THE WELL BORE.
508
A DETONATOR INSIDE THE VERSA FRACKING GUN RECEIVES A DETONATING SIGNAL FROM THE GEOPHYSICAL LOGGING UNIT FOR ACTIVATING EXPLOSIVE CHARES POSITIONED IN THE EXPLOSIVE PODS
510
AFTER RECEIVING THE DETONATING SIGNALS, THE DETONATOR ACTIVATES THE EXPLOSIVE CHARGES TO EXPLODE
512
THE IMPACT OF THE EXPLOSION RUPTURES THE FIRST REGIONS OF THE CARTRIDGE AND THE SECOND REGIONS OF THE GAS FILLED CYLINDER. THE RUPTURE OF THE FIRST REGIONS AND THE SECOND REGIONS RESULTS IN GENERATION OF SHOCK WAVE FOLLOWED BY NEGATIVE BLAST WAVE.

Fig. 5

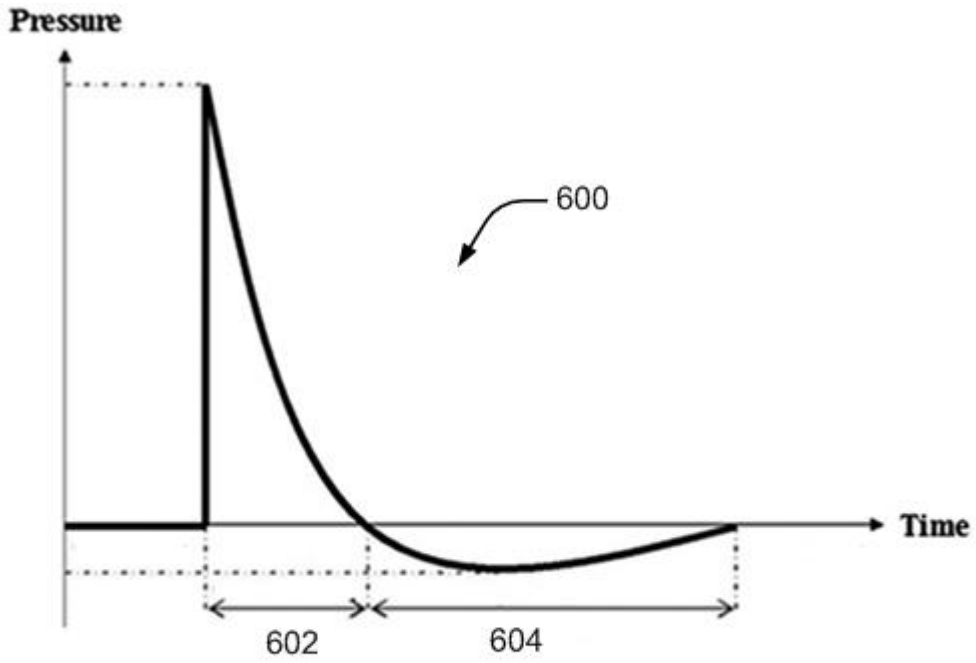

Fig. 6

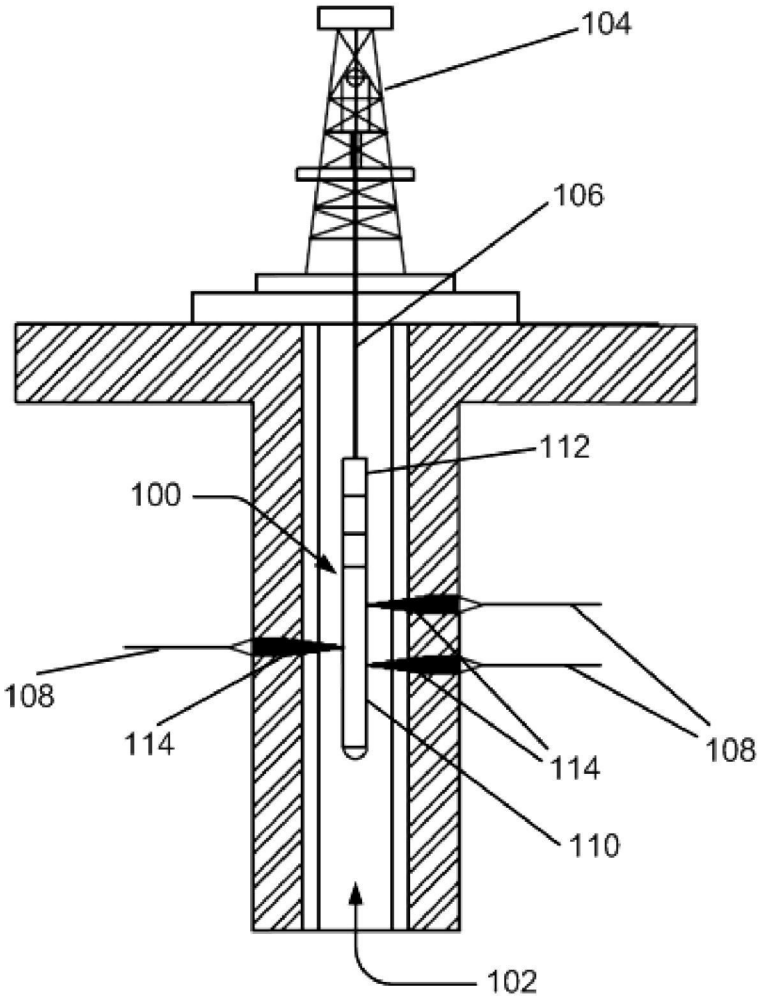

Fig. 1

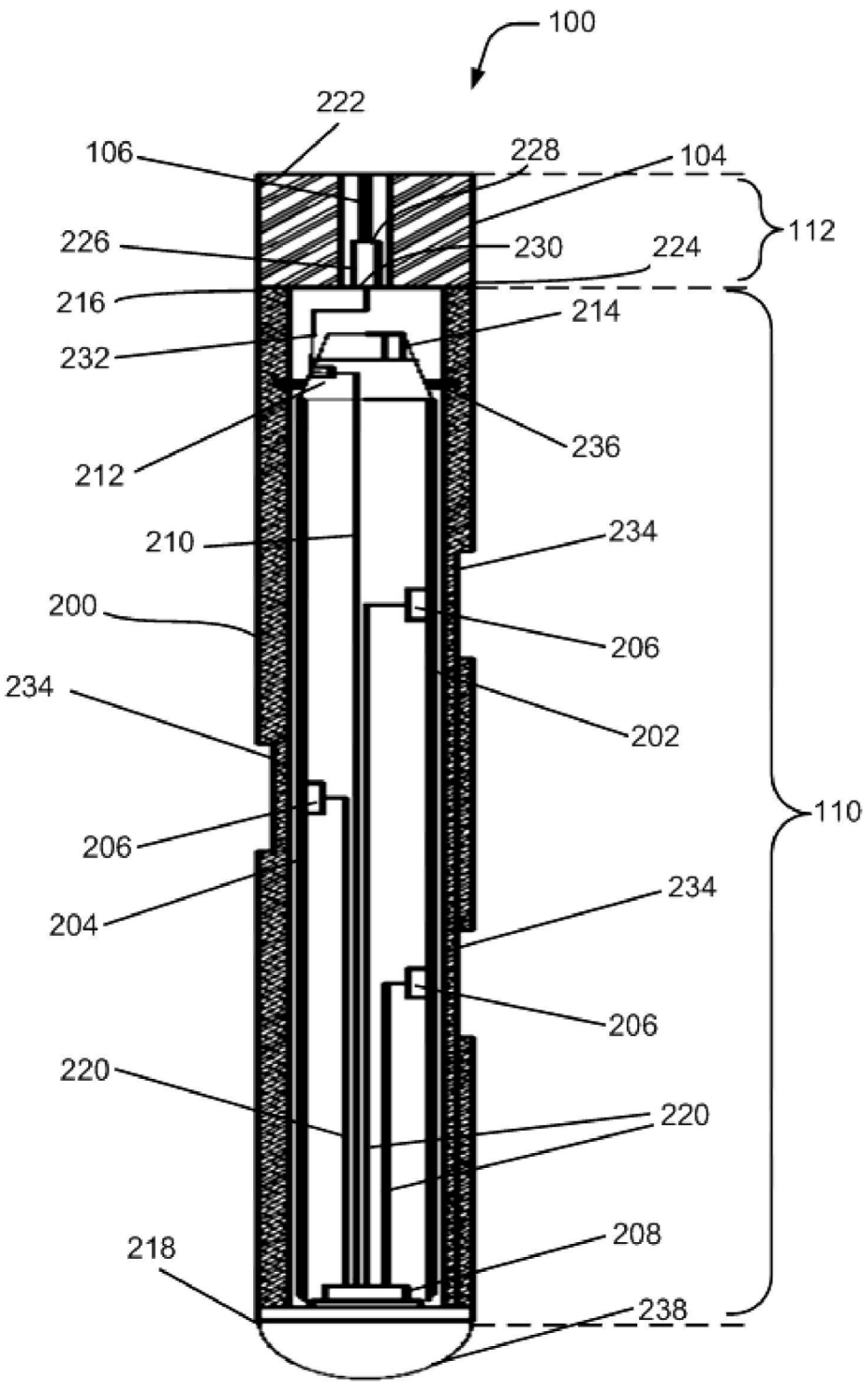
100
222
106
228
104
112
226
230
224
216
214
232
236
212
210
234
200
206
234
202
110
206
234
204
206
220
220
208
218
238

Fig. 2

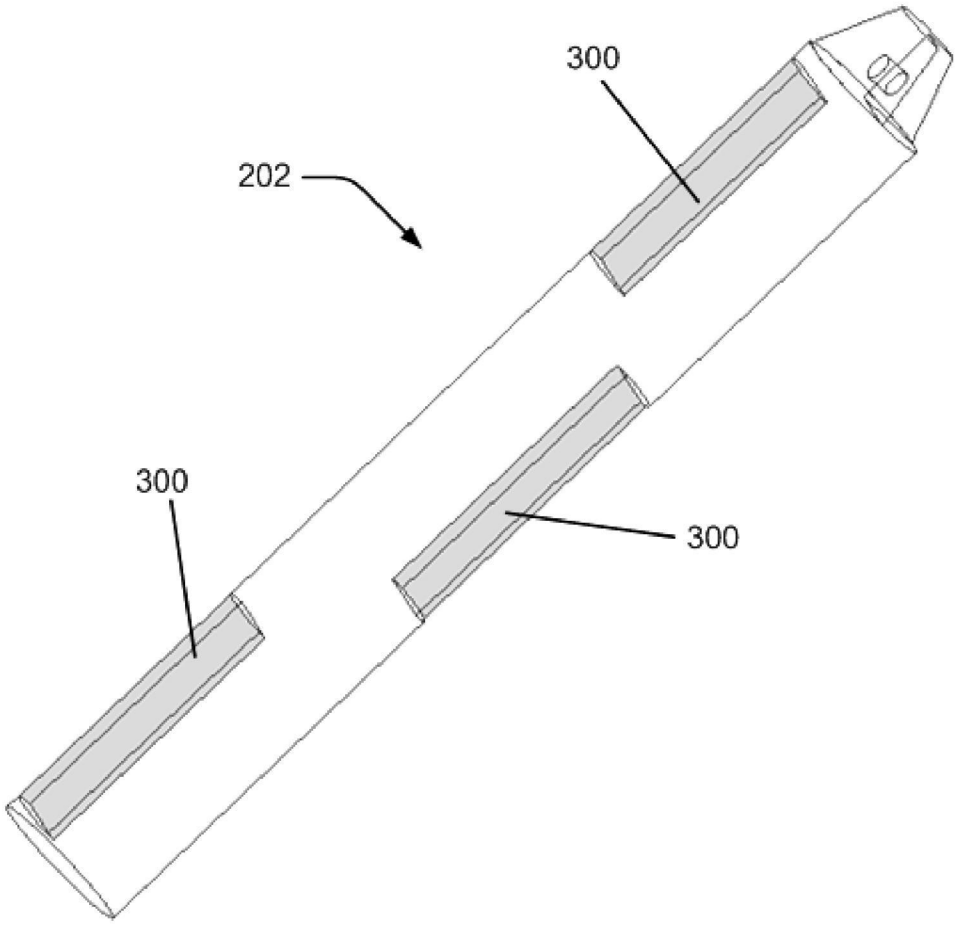

Fig. 3

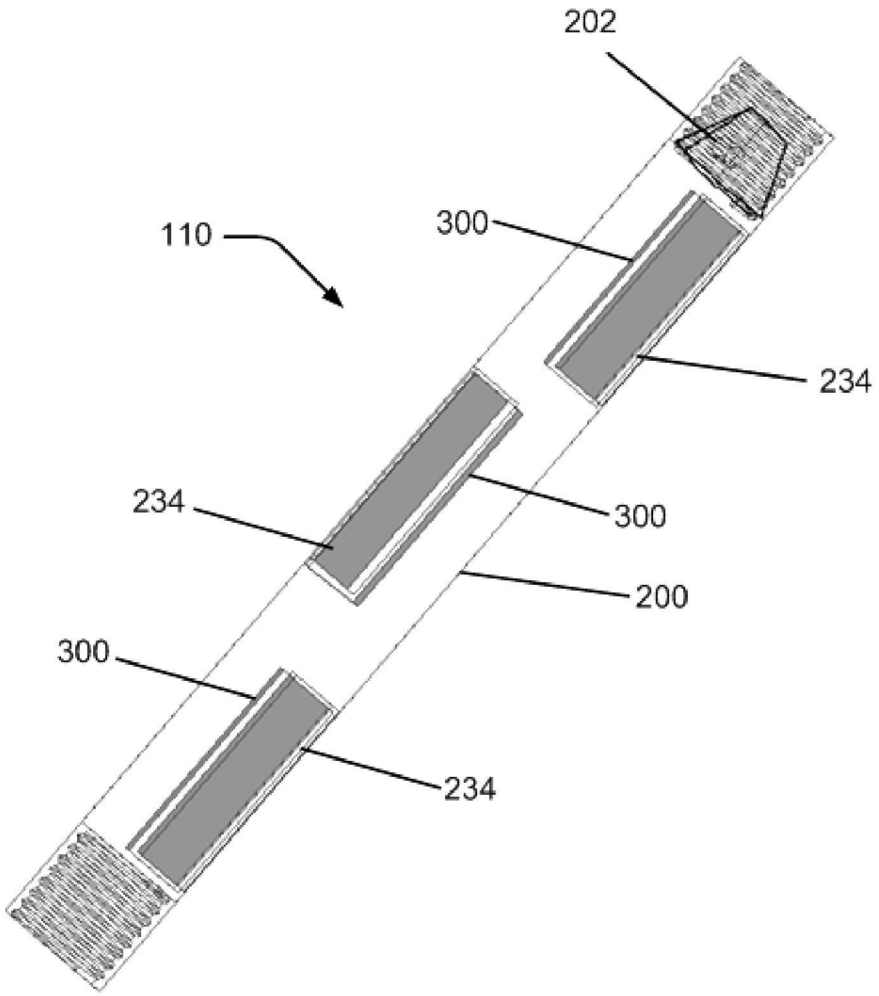

Fig. 4

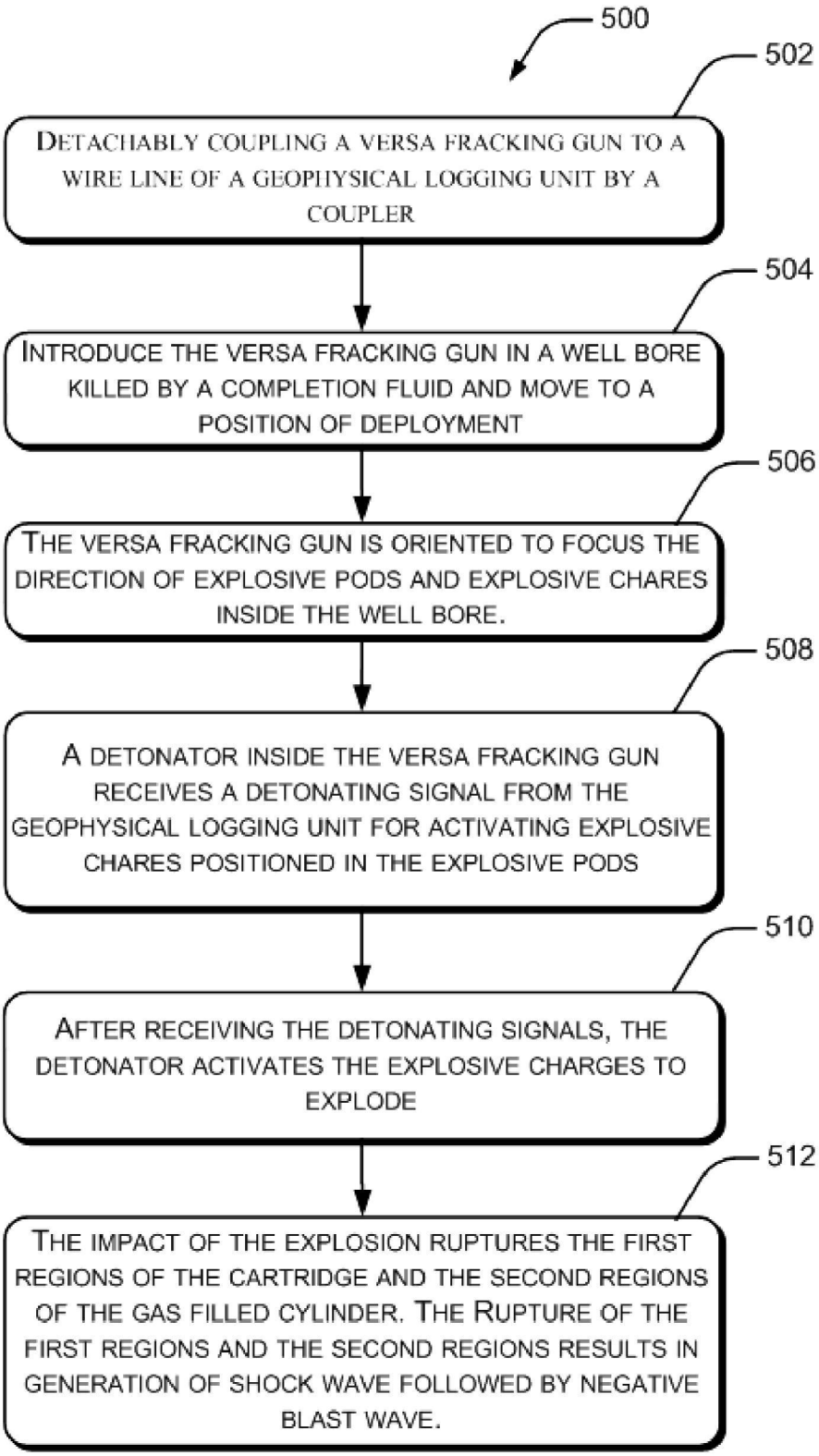
500
502
DETACHABLY COUPLING A VERSA FRACKING GUN TO A WIRE LINE OF A GEOPHYSICAL LOGGING UNIT BY A COUPLER
504
INTRODUCE THE VERSA FRACKING GUN IN A WELL BORE KILLED BY A COMPLETION FLUID AND MOVE TO A POSITION OF DEPLOYMENT
506
THE VERSA FRACKING GUN IS ORIENTED TO FOCUS THE DIRECTION OF EXPLOSIVE PODS AND EXPLOSIVE CHARES INSIDE THE WELL BORE.
508
A DETONATOR INSIDE THE VERSA FRACKING GUN RECEIVES A DETONATING SIGNAL FROM THE GEOPHYSICAL LOGGING UNIT FOR ACTIVATING EXPLOSIVE CHARES POSITIONED IN THE EXPLOSIVE PODS
510
AFTER RECEIVING THE DETONATING SIGNALS, THE DETONATOR ACTIVATES THE EXPLOSIVE CHARGES TO EXPLODE
512
THE IMPACT OF THE EXPLOSION RUPTURES THE FIRST REGIONS OF THE CARTRIDGE AND THE SECOND REGIONS OF THE GAS FILLED CYLINDER. THE RUPTURE OF THE FIRST REGIONS AND THE SECOND REGIONS RESULTS IN GENERATION OF SHOCK WAVE FOLLOWED BY NEGATIVE BLAST WAVE.

Fig. 5

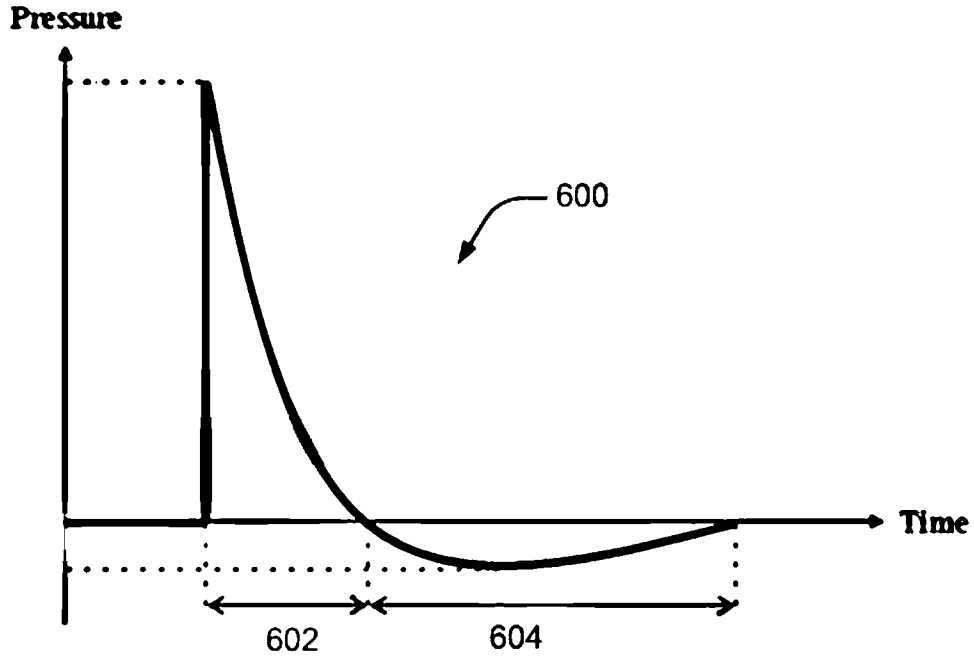

Fig. 6