Oct. 6, 1925. 1,556,118

P. LEE

REENFORCED CONCRETE FLOOR FORM CARRIER SUPPORTING BRACKET

Filed Nov. 19, 1923 2 Sheets-Sheet 1

Fig. 1.

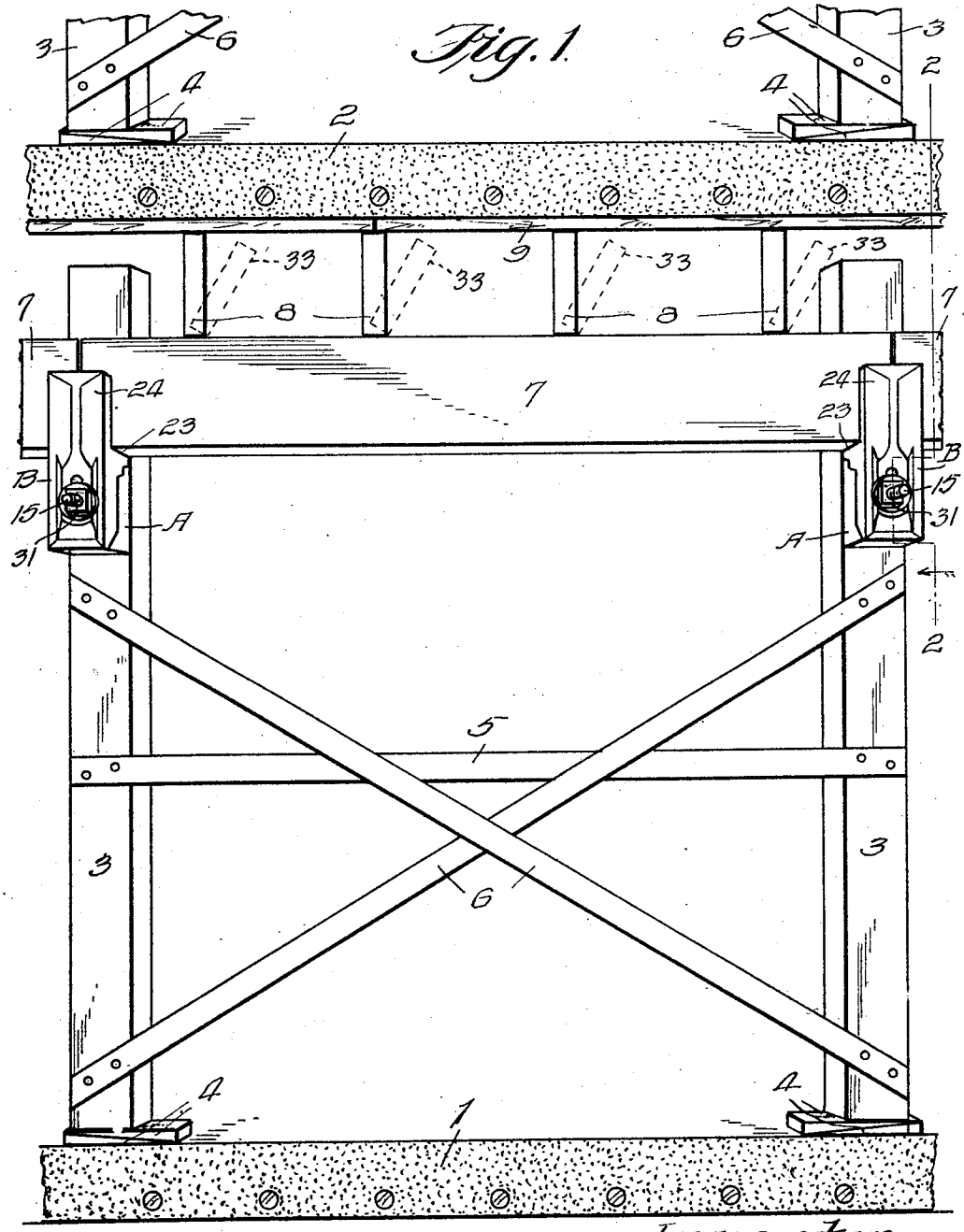

Inventor:
Philip Lee.
By. Fredk. J. Barrow
Attorney.

Oct. 6, 1925. 1,556,118

P. LEE

REENFORCED CONCRETE FLOOR FORM CARRIER SUPPORTING BRACKET

Filed Nov. 19, 1923 2 Sheets-Sheet 2

Fig. 2.

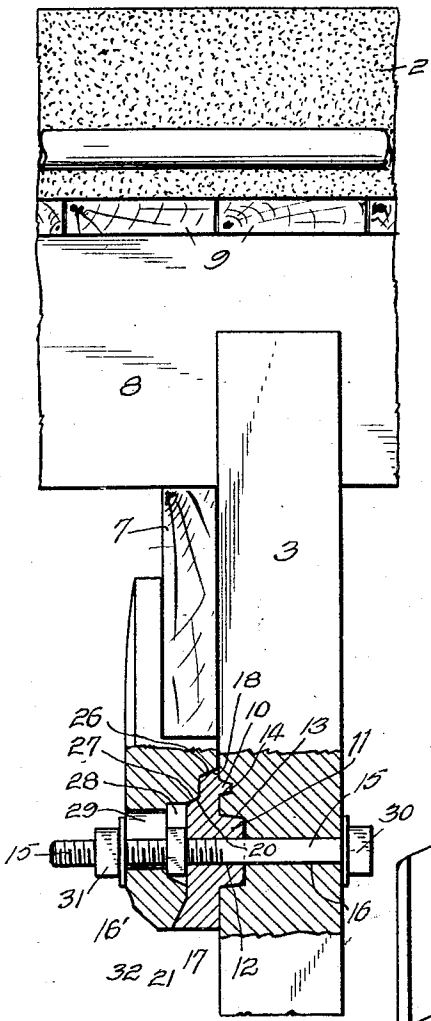

Fig. 3.

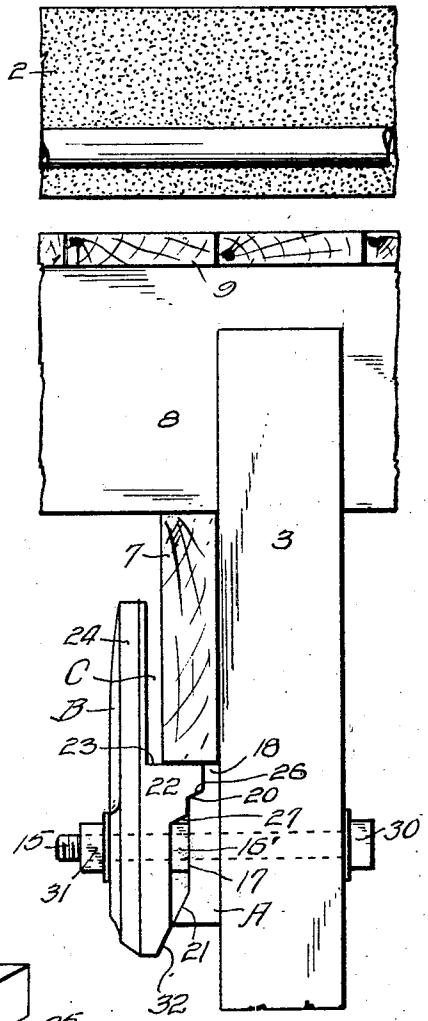

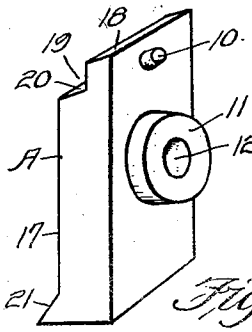

Fig. 4.

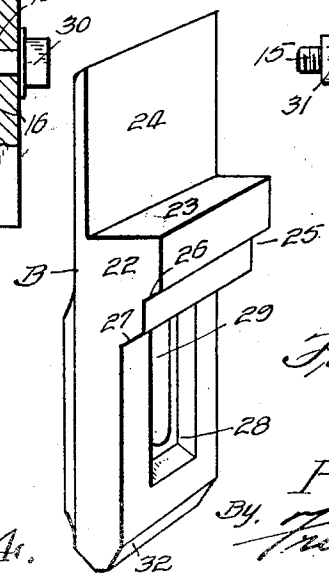

Fig. 5.

Inventor:
Philip Lee.
By Fred'k J. Haroun.
Attorney.

Patented Oct. 6, 1925. 1,556,118

UNITED STATES PATENT OFFICE.

PHILIP LEE, OF ST. LOUIS, MISSOURI.

REENFORCED-CONCRETE-FLOOR-FORM CARRIER-SUPPORTING BRACKET.

Application filed November 19, 1923. Serial No. 675,509.

To all whom it may concern:

Be it known that I, PHILIP LEE, a citizen of the United States, residing in the city of St. Louis, and State of Missouri, have invented certain new and useful Improvements in Reenforced-Concrete-Floor-Form Carrier-Supporting Brackets, of which the following is a specification.

My invention relates to reenforced concrete floor form carrier brackets, and, is a distinct and practical improvement to overcome certain practical objections to, and defects in the universal form of brackets or cleats now used for supporting concrete floor form carriers.

An object of my present invention is the provision of a carrier supporting bracket which is adjustable so that it may be quickly lowered for releasing and lowering form carriers from supporting contact with the joists supporting form flooring so that the joists and flooring may be removed without first removing the carrier brackets from their supporting posts.

A further object of the invention is the provision of carrier supporting brackets which can be used over and over again without danger of breakage as no nails are employed in positioning same upon a supporting post.

A still further object of the invention is the provision of a carrier supporting bracket which will obviate the necessity of nailing the carriers to supporting posts.

A still further object of the invention is the provision of a carrier supporting bracket comprising two sections supported by means of a bolt carried by a supporting post, one of which bracket members is movable laterally and vertically with relation to the other bracket member which is held in removable fixed relation to the supporting post.

A still further object of the invention is the provision of a carrier supporting bracket which is simple and inexpensive in construction, strong and durable, easily and quickly applied to or removed from a supporting post without the employment of nails, adjustable for lowering carriers together with joists and flooring supported thereby, and, which will prove highly efficient for the purpose intended.

With the above and other objects in view, the invention consists in the novel features of construction, arrangement and combination of parts hereinafter more fully described and finally pointed out in the claims hereto appended.

Referring to the accompanying drawings forming a part of this specification, wherein like characters of reference denote similar parts throughout the several views:

Fig. 1, is a view partly in perspective illustrating the application of my carrier brackets to supporting posts for supporting carriers upon which are supported joists and form flooring as used in reenforced concrete floor form construction.

Fig. 2, is a view taken on line 2—2 of Fig. 1, looking in direction of the arrow.

Fig. 3, is a view similar to Fig. 2, but the movable member of the bracket lower for lowering the carrier, joist and flooring after the concrete flooring has set, prior to removing the form structure to another location.

Fig. 4, is a detail in perspective of the stationary member of the bracket.

Fig. 5, is a detail in perspective of the movable member of the bracket.

Referring to the accompanying drawings, the reference characters 1 and 2 represent two separate reenforced concrete floors of a building.

3 represents a plurality of supporting posts of the type usually used in making reenforced concrete form structure which are usually supported upon wedge blocks designated 4, mounted upon the floor. The posts 3 are braced by means of the suitable tie members 5 and suitable cross-braces 6, which are nailed to the supporting posts 3.

7 represents carriers which are supported by means of my improved carrier brackets which will be fully described hereinafter, and 8 indicates the usual joists which are mounted upon the carriers for supporting the form flooring 9. The foregoing structure is the universal or standard form of reenforced concrete floor form structure and is set out to clearly illustrate the application of my carrier brackets thereto, thus obviating the necessity of nailing cleats to the posts 3 for supporting the carriers 7 and of also nailing the carriers to the posts.

In carrying out the aim of my present invention, I employ a carrier bracket consisting of two members or sections A and B.

Section A comprises a metallic body having its inner face flat and provided with a dowel-pin 10 and a relatively large boss

11 having a central opening 12 which also pass entirely through member A. The boss 11 is receivable in a corresponding recess 13 in one of the faces of a post 3 while the dowel-pin 10 is receivable in a corresponding recess 14 in the post 3 for properly positioning the bracket member A upon a post 3, as clearly shown in Fig. 2. The bracket member A is held in stationary or fixed relation to a post 3 by means of a suitable bolt 15 which passes through an opening 16 in the post and then through the opening 12 of member A. The bolt is provided with a nut 16′ which is engageable with the outer face 17 of the bracket member A for locking said member against displacement. The upper end of the stationary bracket member A is slightly beveled to provide a shoulder 18 and is provided with a cutaway portion 19 to provide a second or lower shoulder 20 which also has its upper face slightly beveled. The lower edge of the outer face 17 of the stationary member A is provided with a suitable beveled shoulder 21, as clearly shown in Fig. 2. It will be here observed that the boss 11 assists the bolt 15 in carrying any load strain applied to member A, thus relieving the bolt from part of the strain.

The movable member or section designated B comprises a metallic body having an enlarged central section 22 directed rearwardly to provide a carrier support or shoulder 23. A lip or wall 24 is directed upwardly a suitable distance from the forward edge of the shoulder 23 to provide a carrier space C between a post 3 and the wall 24 of member B, as clearly shown in Figs. 2, 3 and 4. The enlarged central section 22 of member B is cutaway at its lower corner, as at 25, to provide the upper slightly beveled face 26. The lower face of section 22 of member B is also slightly beveled, as at 27, as clearly shown in Fig. 4. The beveled faces 26 and 27 of member B engage the beveled shoulders 18 and 20, respectively, of the stationary member A when member B is in its uppermost or normal position, as shown in Figs. 1 and 2, and the beveled face 26 of member B engages the lower shoulder 20 of member A when member B is in its lower position, as shown in Fig. 3 for lowering the carriers 7, joist 8 and form flooring 9. Movable bracket section B is provided below the enlarged central section 22 thereof with a vertically disposed recess 28 in its rear face for the reception of the locking nut 16. Section B is further provided with a vertically disposed slotted opening 29 for the passage of the bolt 15, as clearly shown in Figs. 2 and 4, and bolt 15 is provided with a head 30 at one end and a securing nut 31 at its opposite end for securely locking the movable bracket section B in contact with the stationary bracket section A, in either its uppermost or lowermost positions and for holding section B against any possible displacement under a load strain, as is evident from Figs. 2 and 3 of the drawings. The lower edge of the inner bracket section B is beveled, as at 32 to engage the beveled face 21 of the stationary bracket section A when locked in its uppermost position, as shown in Fig. 2 and out of engagement therewith when section B is in its lowermost position, as shown in Fig. 3.

The operation of the carrier bracket is as follows:

The carrier bracket is first applied to a post 3 by means of the bolt 15 and nuts 16 and 31, as set forth in the foregoing description with particular reference to Figs. 1 and 2 of the drawing, which illustrate the movable bracket sections B in their uppermost position, hence the carriers 7, joist 8 and form flooring 9 in the position assumed during the construction of a reenforced concrete floor, as is manifest.

After the floor, designated 2, in the drawing has been made and the cement set, the form structure is removed and set up upon floor 2 instead of underneath the same. In this tearing down operation of the form structure, the operator merely loosens the nut 31 of each bracket bolt 15 and the weight of the carriers 7, joists 8 and flooring 9, will cause the beveled faces 26 and 27 of member B to slide off of shoulders 18 and 20, respectively, and cause the beveled face 26 of section B to be lowered to rest upon shoulder 20 of section B, instead of shoulder 18, thereby simultaneously lowering the carriers 7, therewith together with the posts 8 and flooring 9. This lowering operation of the bracket member B causes a space to be formed between the flooring and the concrete floor sufficient to permit the joist 8 to be forced over as indicated by dotted lines 33 in Fig. 1, thereby causing the joist and form flooring to collapse to be easily removed after the carriers 7 have been lowered by lowering the bracket sections B with relation to bracket section A. In the lowering operation of the carriers 7, it will be apparent that not a single nail has to be removed from the structure, as no nails are driven through the carriers 7 into the posts 3, nor are there any cleats employed that must be nailed to the posts setting up the carriers 7 and finally removed when lowering the carriers 7, as in the common practice of building concrete floor form structures.

From the foregoing description, it is apparent that I provide a bracket which is easily and quickly applied to a concrete form structure, removed therefrom and readily manipulated for lowering the carriers when tearing the form structures down.

The many advantages of the herein described invention will readily suggest themselves to those skilled in the art to which it appertains.

I do not desire to be understood as limiting myself to the exact details of construction and arrangement of parts as herein described and illustrated, as it is manifest that variations and modifications may be made without departing from the spirit and scope of my invention and the terms of the following claims, hence I wish it to be understood that I reserve the right to make any such changes, or modifications as may fairly fall within the scope of the appended claims when fairly construed.

What I claim is:

1. A carrier supporting bracket for reenforced concrete floor form structures comprising a stationary bracket member removably fixed to a supporting post having beveled shoulders at different elevations at the upper end of said member and a beveled extension at its lower end and a movable bracket member for supporting form carriers shiftable laterally and downwardly for lowering carriers supported thereby.

2. A carrier supporting bracket for reenforced concrete floor form structures comprising a stationary bracket member removably fixed to a supporting post having beveled shoulders at different elevations at the upper end of said member and a beveled extension at its lower end and a movable bracket member for supporting form carriers shiftable away from the stationary member and supported thereby for lowering the elevation of the carrier supporting bracket member.

3. A carrier supporting bracket comprising in combination with a supporting post, a stationary bracket member fixed to said post, a carrier supporting bracket member laterally and vertically adjustable with relation to the stationary bracket member for changing the elevation thereof to lower carriers supported thereby.

4. In combination with the supporting post and carriers of a reenforced concrete floor form structure, a carrier supporting bracket for each supporting post, said brackets consisting of a stationary member removably fixed to each supporting post, said member having a plurality of inclined shoulders and a movable member upon which form carriers are mounted, said member having inclined faces for engagement with the inclined shoulders of the stationary member and means for permitting lateral and vertical movement of the movable bracket member to a lower elevation when it is desired to lower the carriers supported thereby.

5. A carrier supporting bracket for reenforced concrete floor form structures comprising a bracket member removably fixed to a supporting post of the form structure, a pair of inclined shoulders formed at the upper end of said bracket member, a shiftable bracket member and means for supporting said shiftable bracket member at two different elevations upon the said first mentioned bracket member.

6. In combination with the supporting posts and carriers of a reenforced concrete floor form structure, a stationary bracket member having a flat inner face, a boss extending from said face having a central opening, said boss being seated in a recess in its respective post, a dowel-pin extending from said face, said dowel-pin being receivable in a recess in the post, a bolt and a nut carried thereby for securing said bracket member to its post, a pair of shoulders having beveled faces at the upper end of said bracket member, said shoulder being disposed at different elevations, a shoulder at the lower end of said bracket member, a movable bracket member having a shoulder to support carriers, a carrier guide wall extending upwardly from said shoulder, the lower face of said shoulder being provided with two faces disposed at different elevations for seating engagement with both the shoulders of the stationary bracket member when in its uppermost post and with only one of said shoulders when in its lowered position, said movable member being provided with a vertically disposed slotted opening through which the aforesaid bolt passes to permit vertical and lateral displacement of said movable member in changing from one elevation to the other and a nut carried by the bolt for securely locking the movable member at the desired elevation with relation to the stationary member.

In testimony whereof, I have hereunto signed my name to the specification.

PHILIP LEE.