(12) INTERNATIONAL APPLICATION PUBLISHED UNDER THE PATENT COOPERATION TREATY (PCT)

(19) World Intellectual Property Organization
International Bureau

(43) International Publication Date
2 December 2004 (02.12.2004)

PCT

(10) International Publication Number
WO 2004/103254 A3

(51) International Patent Classification[7]: B65B 1/04

(21) International Application Number:
PCT/US2004/014812

(22) International Filing Date: 12 May 2004 (12.05.2004)

(25) Filing Language: English

(26) Publication Language: English

(30) Priority Data:
10/439,051 14 May 2003 (14.05.2003) US

(71) Applicant *(for all designated States except US)*: **MEDICAL TECHNOLOGY SYSTEMS, INC.** [US/US]; Todd Siegel, 12920 Automobile Blvd., Clearwater, 10 33762 (US).

(72) Inventor; and

(75) Inventor/Applicant *(for US only)*: **PETERSON, Raymond** [US/US]; c/o Medical Technology Systems, Inc., 12920 Automobile Blvd., Clearwater, 10 33762 (US).

(74) Agent: **DEPKE, Robert**; Holland & Knight LLP, 131 S. Dearborn Street, 30th Floor, Chicago, IL 60603 (US).

(81) Designated States *(unless otherwise indicated, for every kind of national protection available)*: AE, AG, AL, AM, AT, AU, AZ, BA, BB, BG, BR, BW, BY, BZ, CA, CH, CN, CO, CR, CU, CZ, DE, DK, DM, DZ, EC, EE, EG, ES, FI, GB, GD, GE, GH, GM, HR, HU, ID, IL, IN, IS, JP, KE, KG, KP, KR, KZ, LC, LK, LR, LS, LT, LU, LV, MA, MD, MG, MK, MN, MW, MX, MZ, NA, NI, NO, NZ, OM, PG, PH, PL, PT, RO, RU, SC, SD, SE, SG, SK, SL, SY, TJ, TM, TN, TR, TT, TZ, UA, UG, US, UZ, VC, VN, YU, ZA, ZM, ZW.

(84) Designated States *(unless otherwise indicated, for every kind of regional protection available)*: ARIPO (BW, GH, GM, KE, LS, MW, MZ, NA, SD, SL, SZ, TZ, UG, ZM, ZW), Eurasian (AM, AZ, BY, KG, KZ, MD, RU, TJ, TM), European (AT, BE, BG, CH, CY, CZ, DE, DK, EE, ES, FI, FR, GB, GR, HU, IE, IT, LU, MC, NL, PL, PT, RO, SE, SI, SK, TR), OAPI (BF, BJ, CF, CG, CI, CM, GA, GN, GQ, GW, ML, MR, NE, SN, TD, TG).

Published:
— *with international search report*
— *before the expiration of the time limit for amending the claims and to be republished in the event of receipt of amendments*

[Continued on next page]

(54) Title: COMPACT STRUCTURE FOR AUTOMATICALLY FILLING SOLID PHARMACEUTICAL PRODUCT PACKAGES

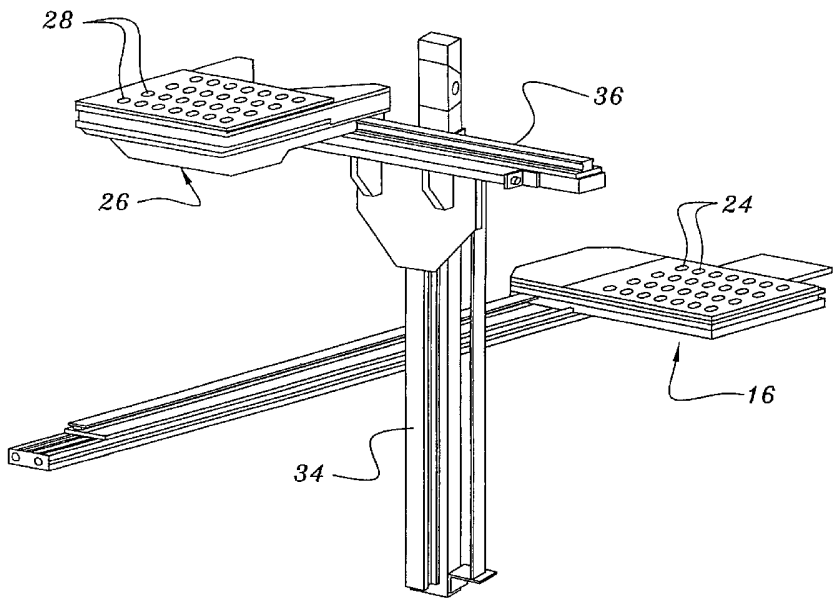

(57) Abstract: An automated solid pharmaceutical product packaging machine includes a plurality of temporary storage members for receiving a plurality of solid pharmaceutical products in a plurality of cavities. The use of the temporary storage cavities enables the machine to process several prescriptions simultaneously. Advantageously, at least one of the temporary storage members is capable of being automatically displaced in a vertical direction in order to increase the capacity of the overall filling system for processing a greater number of solid pharmaceutical products while minimizing the overall footprint of the device.

WO 2004/103254 A3

(88) Date of publication of the international search report:
19 May 2005

For two-letter codes and other abbreviations, refer to the "Guidance Notes on Codes and Abbreviations" appearing at the beginning of each regular issue of the PCT Gazette.

INTERNATIONAL SEARCH REPORT

International application No.
PCT/US04/14812

A. CLASSIFICATION OF SUBJECT MATTER
IPC(7) : B 65 B 1/04
US CL : 141/100
According to International Patent Classification (IPC) or to both national classification and IPC

B. FIELDS SEARCHED

Minimum documentation searched (classification system followed by classification symbols)
U.S. : 141/100; 53/509, 52, 131.2, 150, 152-154, 156, 534, 539, 247, 237, 240, 531, 543, 250

Documentation searched other than minimum documentation to the extent that such documents are included in the fields searched

Electronic data base consulted during the international search (name of data base and, where practicable, search terms used)

C. DOCUMENTS CONSIDERED TO BE RELEVANT

Category *	Citation of document, with indication, where appropriate, of the relevant passages	Relevant to claim No.
X	US 4 870 799 A (BERGERIOUX et al.) 03 October 1989, see entire document.	1, 2

☐ Further documents are listed in the continuation of Box C. ☐ See patent family annex.

* Special categories of cited documents:

"A" document defining the general state of the art which is not considered to be of particular relevance

"E" earlier application or patent published on or after the international filing date

"L" document which may throw doubts on priority claim(s) or which is cited to establish the publication date of another citation or other special reason (as specified)

"O" document referring to an oral disclosure, use, exhibition or other means

"P" document published prior to the international filing date but later than the priority date claimed

"T" later document published after the international filing date or priority date and not in conflict with the application but cited to understand the principle or theory underlying the invention

"X" document of particular relevance; the claimed invention cannot be considered novel or cannot be considered to involve an inventive step when the document is taken alone

"Y" document of particular relevance; the claimed invention cannot be considered to involve an inventive step when the document is combined with one or more other such documents, such combination being obvious to a person skilled in the art

"&" document member of the same patent family

Date of the actual completion of the international search
29 September 2004 (29.09.2004)

Date of mailing of the international search report
16 MAR 2005

Name and mailing address of the ISA/US
Mail Stop PCT, Attn: ISA/US
Commissioner for Patents
P.O. Box 1450
Alexandria, Virginia 22313-1450
Facsimile No. (703) 305-3230

Authorized officer
LINDA SHOLL
Telephone No. 703-308-3880

Form PCT/ISA/210 (second sheet) (January 2004)