(19) Europäisches Patentamt
European Patent Office
Office européen des brevets

(11) EP 1 067 055 A3

(12) EUROPEAN PATENT APPLICATION

(88) Date of publication A3:
02.07.2003 Bulletin 2003/27

(43) Date of publication A2:
10.01.2001 Bulletin 2001/02

(21) Application number: **00112494.0**

(22) Date of filing: **13.06.2000**

(51) Int Cl.[7]: **B65D 5/54**, B65D 81/34

(84) Designated Contracting States:
AT BE CH CY DE DK ES FI FR GB GR IE IT LI LU MC NL PT SE
Designated Extension States:
AL LT LV MK RO SI

(30) Priority: **07.07.1999 GB 9915801**

(71) Applicant: **Bonar IMCA Ltd**
Middleton Grove, Leeds LS11 5LX (GB)

(72) Inventor: **Woods, Kenneth David**
Middleton Grove, Leeds, LS11 5LX (GB)

(74) Representative: **Denmark, James**
Bailey, Walsh & Co.
5 York Place
Leeds LS1 2SD Yorkshire (GB)

(54) FOOD PACKAGING FOR MICROWAVE COOKING

(57) The invention is a package for foodstuff which is for cooking by means of microwaves. The package is constructed to serve as the means in which the foodstuff is contained as microwave cooking takes place. To this end the package has microwave active material to focus heat onto the foodstuff in the package. Typically, the microwave reactive material is receptor material in sheet form.

The invention provides that the package is adapted to be reconfigured usually by tearing it, and enabling the foodstuff to get closer to the receptor, or into contact with it.

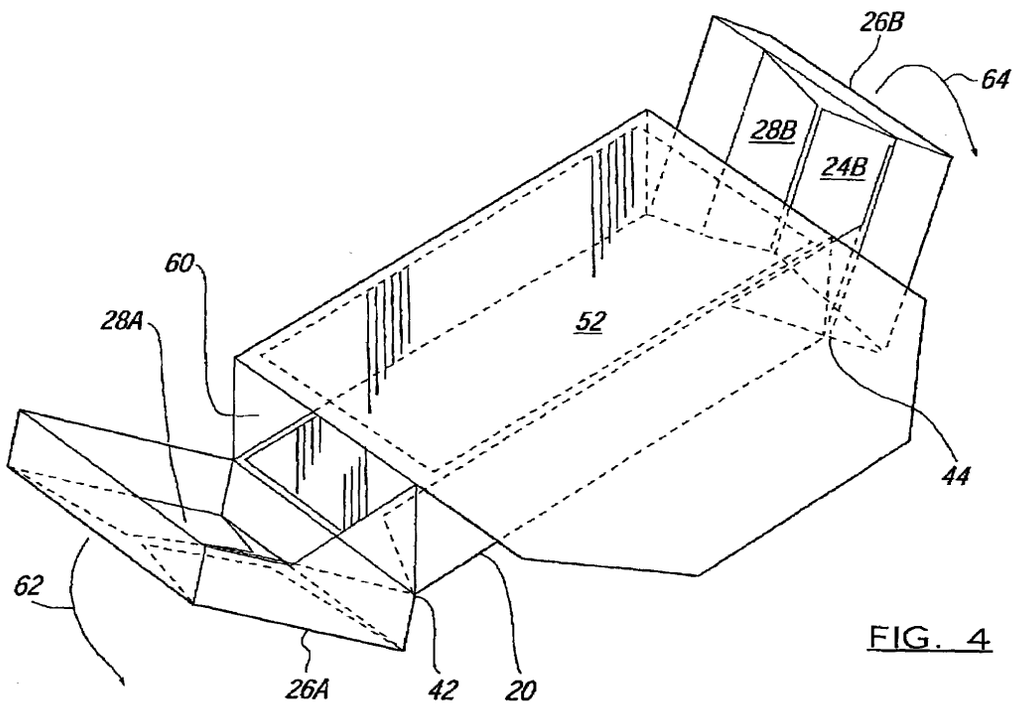

FIG. 4

EP 1 067 055 A3

European Patent Office

PARTIAL EUROPEAN SEARCH REPORT

which under Rule 45 of the European Patent Convention shall be considered, for the purposes of subsequent proceedings, as the European search report

Application Number EP 00 11 2494

DOCUMENTS CONSIDERED TO BE RELEVANT

Category	Citation of document with indication, where appropriate, of relevant passages	Relevant to claim	CLASSIFICATION OF THE APPLICATION (Int.Cl.7)
X Y A	US 4 813 594 A (BROWN WILLIAM M ET AL) 21 March 1989 (1989-03-21) * the whole document *	1-5, 14-21,28 10-12, 22,23,26 6-9,13	B65D5/54 B65D81/34
Y	FR 2 762 296 A (SMURFIT SOCAR SA) 23 October 1998 (1998-10-23) * the whole document *	10-12	
Y	US 5 045 330 A (PAWLOWSKI THOMAS D) 3 September 1991 (1991-09-03) * the whole document *	22,23	
Y	GB 528 602 A (JOHN CARTNER;GEORGE WILLIAM LAUGHARNE MORGA) 1 November 1940 (1940-11-01) * the whole document *	26	
X	EP 0 563 442 A (WADDINGTONS CARTONS LTD) 6 October 1993 (1993-10-06) * the whole document *	1-3, 14-16,28	TECHNICAL FIELDS SEARCHED (Int.Cl.7) B65D

-/--

INCOMPLETE SEARCH

The Search Division considers that the present application, or one or more of its claims, does/do not comply with the EPC to such an extent that a meaningful search into the state of the art cannot be carried out, or can only be carried out partially, for these claims.

Claims searched completely :

1-26, 28

Claims searched incompletely :

Claims not searched :

27

Reason for the limitation of the search:

Rule 29 (6) of the EPC.

Place of search	Date of completion of the search	Examiner
THE HAGUE	25 April 2003	Pernice, C

CATEGORY OF CITED DOCUMENTS

X : particularly relevant if taken alone
Y : particularly relevant if combined with another document of the same category
A : technological background
O : non-written disclosure
P : intermediate document

T : theory or principle underlying the invention
E : earlier patent document, but published on, or after the filing date
D : document cited in the application
L : document cited for other reasons
.....
& : member of the same patent family, corresponding document

EPO FORM 1503 03.82 (P04C07)

European Patent Office

PARTIAL EUROPEAN SEARCH REPORT

Application Number
EP 00 11 2494

DOCUMENTS CONSIDERED TO BE RELEVANT			CLASSIFICATION OF THE APPLICATION (Int.Cl.7)
Category	Citation of document with indication, where appropriate, of relevant passages	Relevant to claim	
A	US 5 049 710 A (BUNKE PAUL R ET AL) 17 September 1991 (1991-09-17) * the whole document * ---	1-3, 14-16,28	
A	US 1 920 227 A (WILDER HAROLD K) 1 August 1933 (1933-08-01) * the whole document * -----	24,25	
			TECHNICAL FIELDS SEARCHED (Int.Cl.7)

EPO FORM 1503 03.82 (P04C10)

ANNEX TO THE EUROPEAN SEARCH REPORT ON EUROPEAN PATENT APPLICATION NO. EP 00 11 2494

This annex lists the patent family members relating to the patent documents cited in the above-mentioned European search report.
The members are as contained in the European Patent Office EDP file on
The European Patent Office is in no way liable for these particulars which are merely given for the purpose of information.

25-04-2003

Patent document cited in search report		Publication date	Patent family member(s)			Publication date
US 4813594	A	21-03-1989	CA	1320698	A1	27-07-1993
FR 2762296	A	23-10-1998	FR	2762296	A1	23-10-1998
US 5045330	A	03-09-1991	NONE			
GB 528602	A	01-11-1940	NONE			
EP 0563442	A	06-10-1993	AT	136520	T	15-04-1996
			CA	2084793	A1	04-10-1993
			DE	69209820	D1	15-05-1996
			EP	0563442	A1	06-10-1993
			US	5369256	A	29-11-1994
US 5049710	A	17-09-1991	AT	200381	T	15-04-2001
			AU	640981	B2	09-09-1993
			AU	6971591	A	24-07-1991
			CA	2068331	A1	30-06-1991
			DE	69033721	D1	10-05-2001
			DE	69033721	T2	25-10-2001
			EP	0507814	A1	14-10-1992
			JP	2927953	B2	28-07-1999
			JP	5502969	T	20-05-1993
			WO	9110339	A1	11-07-1991
US 1920227	A	01-08-1933	NONE			

EPO FORM P0459

For more details about this annex : see Official Journal of the European Patent Office, No. 12/82