(12) INTERNATIONAL APPLICATION PUBLISHED UNDER THE PATENT COOPERATION TREATY (PCT)

(19) World Intellectual Property Organization
International Bureau

(43) International Publication Date
1 August 2013 (01.08.2013)

WIPO | PCT

(10) International Publication Number
WO 2013/112880 A1

(51) International Patent Classification:
H01R 13/52 (2006.01)

(21) International Application Number:
PCT/US2013/023208

(22) International Filing Date:
25 January 2013 (25.01.2013)

(25) Filing Language: English

(26) Publication Language: English

(30) Priority Data:
61/590,630 25 January 2012 (25.01.2012) US

(71) Applicant: **INOVA LTD.** [US/US]; P.O. Box 309 GT Ugland House, South Church Street, George Town, Grand Cayman (KY).

(72) Inventors: **CAMERON, Randall, V.**; 1105 Channelside Drive SW, Airdrie, Alberta, T4B 3J4 (CA). **WOOD, Terry, E.**; 525 Rocky Ridge View NW, Calgary, Alberta, T3G 4X3 (CA).

(74) Agent: **KUMAR, Chandran, D.**; Mossman, Kumar & Tyler, P.O. Box 421239, Houston, TX 77242 (US).

(81) Designated States *(unless otherwise indicated, for every kind of national protection available)*: AE, AG, AL, AM, AO, AT, AU, AZ, BA, BB, BG, BH, BN, BR, BW, BY, BZ, CA, CH, CL, CN, CO, CR, CU, CZ, DE, DK, DM, DO, DZ, EC, EE, EG, ES, FI, GB, GD, GE, GH, GM, GT, HN, HR, HU, ID, IL, IN, IS, JP, KE, KG, KM, KN, KP, KR, KZ, LA, LC, LK, LR, LS, LT, LU, LY, MA, MD, ME, MG, MK, MN, MW, MX, MY, MZ, NA, NG, NI, NO, NZ, OM, PA, PE, PG, PH, PL, PT, QA, RO, RS, RU, RW, SC, SD, SE, SG, SK, SL, SM, ST, SV, SY, TH, TJ, TM, TN, TR, TT, TZ, UA, UG, US, UZ, VC, VN, ZA, ZM, ZW.

(84) Designated States *(unless otherwise indicated, for every kind of regional protection available)*: ARIPO (BW, GH, GM, KE, LR, LS, MW, MZ, NA, RW, SD, SL, SZ, TZ, UG, ZM, ZW), Eurasian (AM, AZ, BY, KG, KZ, RU, TJ, TM), European (AL, AT, BE, BG, CH, CY, CZ, DE, DK, EE, ES, FI, FR, GB, GR, HR, HU, IE, IS, IT, LT, LU, LV, MC, MK, MT, NL, NO, PL, PT, RO, RS, SE, SI, SK, SM, TR), OAPI (BF, BJ, CF, CG, CI, CM, GA, GN, GQ, GW, ML, MR, NE, SN, TD, TG).

Published:

— *with international search report (Art. 21(3))*

(54) Title: SEALING FEATURE FOR USE WITH CONNECTORS

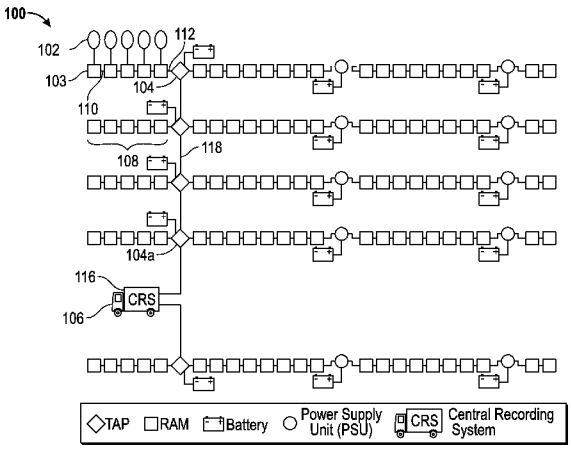

FIG. 1

(57) Abstract: A connector for forming an electrical connection includes a connector body and an insulator disposed in the connector body. The insulator may include a plurality of female contact and a plurality of passages. Each passage allows access to one of the female contacts and is at least partially defined by a plurality of inwardly projecting rings. The connector also includes a plug having a plurality of male contact male contacts complementary to the female contacts. Each male contact male contact has a tower shaped to sealingly seat within an associated passage in the insulator.

WO 2013/112880 A1

TITLE: **SEALING FEATURE FOR USE WITH CONNECTORS**

INVENTOR(S): **CAMERON, Randall V.; and WOOD, Terry E.**

FIELD OF THE DISCLOSURE

[0001] This disclosure generally relates to sealing arrangements and methods for connectors used to make electrical connections.

BACKGROUND OF THE DISCLOSURE

[0002] Seismic surveys are conducted to map subsurface structures to identify and develop oil and gas reservoirs. Seismic surveys are typically performed to estimate the location and quantities of oil and gas fields prior to developing (drilling wells) the fields and also to determine the changes in the reservoir over time subsequent to the drilling of wells. On land, seismic surveys are conducted by deploying an array of seismic sensors (also referred to as seismic receivers) over selected geographical regions. These arrays typically cover 75-125 square kilometers or more of a geographic area and include 2000 to 5000 seismic sensors. The seismic sensors (geophones or accelerometers) are coupled to the ground in the form of a grid. An energy source, such as an explosive charge (buried dynamite for example) or a mobile vibratory source, is used at selected spaced apart locations in the geographical area to generate or induce acoustic waves or signals (also referred to as acoustic energy) into the subsurface. The acoustic waves generated into the subsurface reflect back to the surface from discontinuities in a subsurface formation, such as those formed by oil and gas reservoirs. The reflections are sensed or detected at the surface by the seismic sensors (hydrophones, geophones, etc.). Data acquisition units

deployed in the field proximate the seismic sensors may be configured to receive signals from their associated seismic sensors, at least partially processes the received signals, and transmits the processed signals to a remote unit (typically a central control or computer unit placed on a mobile unit). The central unit typically controls at least some of the operations of the data acquisition units and may process the seismic data received from all of the data acquisition units and/or record the processed data on data storage devices for further processing. The sensing, processing, and recording of the seismic waves is referred to as seismic data acquisition.

[0003] Such systems may use numerous electrical connections that must be formed in an open environment. This disclosure addresses the need for robust sealing arrangements for connectors that can be used to make connections with a high degree of reliability.

SUMMARY OF THE DISCLOSURE

[0004] In aspects, the present disclosure provides a connector for forming an electrical connection. The connector may include a connector body and an insulator disposed in the connector body. The insulator may include a plurality of female contact and a plurality of passages. Each passage allows access to one of the female contacts and is at least partially defined by a plurality of inwardly projecting rings. The connector also includes a plug having a plurality of male contacts complementary to the female contacts. Each male contact has a tower shaped to sealingly seat within an associated passage in the insulator.

[0005] In other embodiments, the connector may include a connector body and an insulator disposed in the connector body. The insulator may include a plurality of female contacts, a plurality of passages that allows access to one of the female contacts, and a plurality of sealing rings formed on a surface defining each passage. The connector may also include each plug having a plurality of male contacts complementary to the female contacts, each male contact having a tower shaped to sealingly seat within an associated passage in the insulator.

[0006] Examples of certain features of the disclosure have been summarized rather broadly in order that the detailed description thereof that follows may be better understood and in order that the contributions they represent to the art may be appreciated.

BRIEF DESCRIPTION OF THE DRAWINGS

[0007] For a detailed understanding of the present disclosure, reference should be made to the following detailed description of the embodiments, taken in conjunction with the accompanying drawings, in which like elements have been given like numerals, wherein:

FIG. 1 shows a schematic of a seismic survey system according to one embodiment of the present disclosure;

FIG. 2 shows a sectional view of a connector according to one embodiment of the present disclosure;

FIG. 3 shows a sectional view of a plug for a connector according to one embodiment of the present disclosure;

FIG. 4 shows a sectional view of a connector body for a connector according to one embodiment of the present disclosure;

FIG. 5 shows a sealing section of an insulator for a connector body according to one embodiment of the present disclosure; and

FIG. 6 shows a sealing section of an insulator and a tower of a plug according to one embodiment of the present disclosure.

DETAILED DESCRIPTION

[0008] The present disclosure relates to devices and methods for selectively locking electrical connections between electrical components used during seismic data acquisition. The present disclosure may be implemented in embodiments of different forms. The drawings shown and the descriptions provided herein correspond to certain specific embodiments of the present disclosure for the purposes of explanation of the concepts contained in the disclosure with the understanding that the present disclosure is to be considered an exemplification of the principles of the disclosure, and is not intended to limit the scope of the disclosure to the illustrated drawings and the description herein.

[0009] **FIG. 1** depicts an embodiment of a cable seismic data acquisition system **100**. Such a system includes an array (string) of spaced-apart seismic sensor units **102**. Seismic sensors units **102** may include, but are not limited to, multi-component sensors such as a three-component accelerometer sensor incorporating micro electro-mechanical systems (MEMS) technology, velocity sensors such as a

conventional geophone or a pressure sensor such as a conventional hydrophone. Any sensor unit capable of sensing seismic energy may be used. Each sensor unit **102** is typically coupled via cabling to a data acquisition device (such as remote acquisition module (RAM) **103**), and several of the data acquisition devices and associated sensor units **102** are coupled via cabling **110** to form a line or group **108**. The group **108** is then coupled via cabling **112** to a line tap (such as fiber TAP unit (FTU) **104**). Several FTUs **104** and associated lines **112** are usually coupled together by cabling, such as shown by the baseline cable **118**.

[0010] A RAM **103** may be configured to record analog seismic signals that are generated by the sensors units **102**. The RAM **103** may be configured to convert analog signals from the sensor units **102** into digital signals. The digitized information may then be transmitted to an FTU **104**. One or more FTU's **104**, such as FTU **104a**, may be configured to transmit the digitized information to a central recording system (CRS) **106**. The devices involved in seismic data acquisition may be collectively referred to as "seismic devices," which may include, but is not limited to: sensor units **102**, RAMs **103**, and FTUs **104**, CRS **106**, and other associated auxiliary devices **116**.

[0011] In wireless embodiments, the FTUs **104** may communicate with the CRS **106** using radio frequency transmissions and are typically bandwidth limited. In traditional wireless seismic data acquisition systems, an attribute (physical or seismic) degradation affecting the data quality is typically detected by monitoring (printing and viewing) shot (source activation) records immediately after recording.

[0012] As should be appreciated, seismic data acquisition systems, whether cabled-based such as the system **100** or a wireless system, require numerous electrical connections. Moreover, these connections may have to be made "in the field," which subjects the connections to harmful environmental conditions (*e.g.*, dirt, moisture, shock from rough handling, etc.).

[0013] Referring now to **FIG. 2**, there is shown one embodiment of a connector **200** that incorporates sealing features that reduce the force necessary to make up a connection while providing enhanced protection from environmental hazards such as water intrusion. The connector **200** includes a connector body **202** and a plug **204**. The connector body **202** includes an insulator **301** that cooperates with towers **302** (**FIG. 3**) in the plug **204** to form a liquid-tight seal within the connector **200**. Illustrative embodiments are described below.

[0014] Referring now to **FIG. 3**, the plug **204** may include a plurality of male contacts **300** (or pins) that are partially encased by the towers **302**. The male contacts **300** may be a set of conventionally arrayed metal conductors adapted to transmit power and / or data. The towers **302** may be generally tubular members that have one or more inclined or sloped outer surface **304** that provide a cone-line shape. In the embodiment shown, the tower **302** has a first section **306** with a non-varying diameter (*e.g.*, a cylindrical shape) and a second section **308** with a gradually increasing diameter (*e.g.*, a conical shape).

[0015] Referring now to **FIG. 4**, the connector body **202** includes conductors **310** that are at least partially encased in the insulator **301**. Each conductor **310** may include female contacts **314** (or socket ends) for receiving a male contact **300** (**FIG.**

3). The conductor **310** may also include a terminal end **318** adapted to connect with another electrical component (not shown). The insulator **301** may be formed of a non-conductive material such as silicone that is capable of forming a fluid-tight seal with a contacting surface. The insulator **301** includes a plurality of axial passages **320**, each of which receives a conductor **310**. The female contacts **314** of the conductors **310** terminate at a sealing section **322** of the passage **320**.

[0016] Referring now to **FIG. 5**, there is shown a sectional view of the insulator **301** that includes the sealing section **322**. The sealing section **322** uses multiple sealing modes to form a fluid barrier with the tower **302** (**FIG. 3**). In one arrangement, the sealing section **322** may have a first seal section **324** and a second seal section **326**, each of which may use a different sealing mode. As shown, the second seal section **326** is accessible by an opening By varying the sealing modes and the timing at which seals are formed along the sealing section **322**, the insertion force needed to assemble the connector **200** (**FIG. 2**) may be reduced. For instance, the first seal section **324** may use a "cork and bottle" type of seal formed as the tower **302** (**FIG. 3**) slides through and expands portions of the sealing section **324**. A "cork and bottle" seal is an interfacial seal wherein a seal is formed along an interface around each male contact. The basic components of such a seal include a resilient material displaces into the rigid or hard passage in a socket interface. The second seal section **326** may use a compression seal formed as the tower **302** (**Fig. 3**) compresses portions of the second seal section **326** with minimal sliding between contacting surfaces.

[0017] In one non-limiting embodiment, the first seal section **324** may include one or more rings **328** and the second seal section **326** may include one or more rings **330**. The rings **328**, **330** are formed by reducing the diameter of the passage **320** (**Fig. 4**). Thus, the rings **328**, **330** are portions of the insulator **301** that projects radially inwardly into the passage. These projections may be considered to form an undulating profile or inner surface that defines the sealing section **322** of the passage **320** (**Fig. 3**). As shown, the undulating profile may include shapes resembling a portion of a "tear drop." It should be understood, however, that the undulating surface may include hemispheric shapes, oval shapes, or other non-curved shapes such as triangular shapes. Also, while two rings **328**, **330** are shown in each section **324**, **326**, respectively, it should be understood that greater or fewer number of rings **328**, **330** may be used.

[0018] Referring now to **FIG. 6**, the geometries of the tower **302** and the undulating profile of the sealing section **322** of the insulator **301** may be selected to control the manner in which seals are formed in the connector body **202**. For instance, the relative angles of the contact surfaces of the tower **302** and the sealing section **322** may be varied and arranged such that the insertion force needed to form the seals in the seal section **320** may be kept below a specified value (*e.g.*, torque value).

[0019] Referring still to **FIG. 6**, the diameter of the rings **328** and the contact surface of the tower first section **306** are non-varying to obtain a "cork and bottle" type of seal. Thus, the rings **328** sequentially engage the tower first section **306** as the tower first section **306** slides through the passage **320**. Accordingly, the tower first

section **306** has a substantial amount of sliding contact with the "rings" **328** as seals form at the contacting surfaces. Thus, the relative sliding motion does not substantially expand the diameter of the rings **328**.

[0020] In contrast, a compression type of seal is formed in the second seal section **326** (**Fig. 5**) by varying the diameter of the rings **330** and the tower second section **308**. For example, the diameters of the contact plane **336** defining a slope of the radially inward tips of the rings **330** may be selected to correspond with the angle of the sloped surface of the tower second section **308** (*e.g.*, interferingly contact). For example, the rings **330** and the tower second section **308** are inclined to have a greater amount of transverse contacting surface area to form seals. Thus, the rings **330** expand and compress during relative sliding between the contact surfaces.

[0021] It should be noted that the tower first section **306** may pass with minimal, if any, contact with the rings **330**. Thus, a seal may be formed in the first seal section **324** without the tower **302** having to functionally engage the second seal section **326**. Because the tower **302** primarily engages the first seal section **324** (**Fig. 5**), little, if any, insertion force is required to move the tower **302** through the second seal section **308**. Moreover, when the seals are formed in the second seal section **326** (**Fig. 5**), a majority of the seals have already been formed in the first seal section **324** (**Fig. 5**). Thus, the seal formed at the second seal section **324** is formed no earlier than when the seal at the first seal section **324** (**Fig. 3**) is formed.

[0022] It should be understood that the present disclosure is susceptible to numerous variants. For example, referring to **FIG. 6**, the tower first section **306** may include a conical contact surface and the tower second section **308** may have a

cylindrical contact surface. Likewise, the rings **328** may follow an inclined contact plane and the rings **330** may follow a cylindrical contact plane. In another embodiment, the tower **302** may be formed to have substantially only a conical section. In still other embodiments, the tower **302** may have two or more conical sections.

[0023] From the above, it should be appreciated that what has been described includes a connector having a connector body and an insulator disposed in the connector body. The insulator may include a plurality of female contacts and a plurality of passages, each allowing access to one of the female contacts. Also, each passage is at least partially defined by a plurality of inwardly projecting rings. The connector also includes a plug having a plurality of male contacts complementary to the female contacts. Each male contact is partially encased in a tower shaped to sealingly seat within an associated passage in the insulator.

[0024] In one embodiment, the connector may further include a cable configured to convey seismic information and a seismic device configured to communicate via the cable. The plug is connected to an end of the cable and the connector body is connected to the seismic device. Each tower has a tip and a diametrically enlarged base and each associated passage has a first seal section and a second seal section. The tower tip forms a first seal by sliding along the first seal section and the diametrically enlarged base forms a second seal by compressing the second seal section. The tip passes through the second seal section before being received in the second seal section and the second seal is formed no earlier than when the first seal is formed.

CLAIMS

What is claimed is:

1. A connector, comprising:

a connector body;

an insulator disposed in the connector body, the insulator including:

- a plurality of female contacts; and
- a plurality of passages, each passage allowing access to one of the female contacts, each passage being at least partially defined by a plurality of inwardly projecting rings; and

a plug having a plurality of male contacts complementary to the female contacts, each male contact being partially encased in a tower shaped to sealingly seat within an associated passage in the insulator.

2. The connector of claim 1, further comprising:

a cable configured to convey seismic information, wherein the plug is connected to an end of the cable;

a seismic device configured to communicate via the cable, wherein the connector body is connected to the seismic device;

wherein each tower has a tip and a diametrically enlarged base, wherein each associated passage has a first seal section and a second seal section, wherein the tower tip forms a first seal by sliding along the first seal section and the diametrically enlarged base forms a second seal by compressing the second seal section, wherein the tip passes through the second seal section before being received in the second seal

section, and wherein the second seal is formed no earlier than when the first seal is formed.

3. The connector of claim 1, wherein the rings and the towers are configured to sealingly engage to one another in response to a substantially uniform insertion force applied to the plug.

4. The connector of claim 1, wherein a substantial portion of the rings and the towers engage simultaneously to one another.

5. The connector of claim 1, wherein a profile of at least one passage and at least one associated tower each have a conical section.

6. The connector of claim 1, wherein the inwardly projecting rings form an undulating inner sealing surface defining the passage.

7. The connector of claim 1, wherein at least one tower has a tip and a diametrically enlarged base, wherein an associated passage has an inner surface having a receiving section and an interior section, wherein the tip does not contact the receiving section when the tower seats in the associated passage.

8. The connector of claim 7, wherein the receiving section includes at least one inwardly projecting ring having a diameter greater than the tip of the at least one tower.

9. The connector of claim 1, wherein the plurality of inwardly projecting rings have radially inward tips having a sloped contact plane.

10. A method of forming a connection, comprising:

disposing an insulator in the connector body, the insulator including:

- a plurality of female contacts; and
- a plurality of passages, each passage allowing access to one of the female contacts, each passage being at least partially defined by a plurality of inwardly projecting rings; and

forming a plug having a plurality of male contacts complementary to the female contacts, each male contact being partially encased in a tower shaped to sealingly seat within an associated passage in the insulator; and

engaging the plug with the connector.

11. The method of claim 10, wherein each tower has a tip and a diametrically enlarged base, wherein each associated passage has a first seal section and a second seal section, and further comprising:

connecting the plug to an end of a cable configured to convey seismic information;

connecting the connector body to a seismic device configured to communicate via the cable;

forming a first seal by sliding the tower tip along the first seal section;

forming a second seal by compressing the diametrically enlarged base against the second seal section, wherein the tower tip passes through the second seal section before being received in the second seal section, and wherein the second seal is formed no earlier than when the first seal is formed.

12. A connector, comprising:

a connector body;

an insulator disposed in the connector body, the insulator including:

- a plurality of female contacts; and
- a plurality of passages, each passage allowing access to one of the female contacts;
- a plurality of sealing rings formed on a surface defining each passage; and

a plug having a plurality of male contacts complementary to the female contacts, each male contact having a tower shaped to sealingly seat within an associated passage in the insulator.

13. The connector of claim 12, further comprising:

a cable configured to convey seismic information, wherein the plug is connected to an end of the cable;

a seismic device configured to communicate via the cable, wherein the connector body is connected to the seismic device;

wherein each tower has a tip and a diametrically enlarged base, wherein each associated passage has an inner surface having a receiving section and an interior

section, wherein the tower tip does not contact the receiving section as the tower enters the associated passage, and wherein a substantial portion of the rings and the tower are configured to substantially simultaneously engage one another in response to a substantially uniform insertion force applied to the plug.

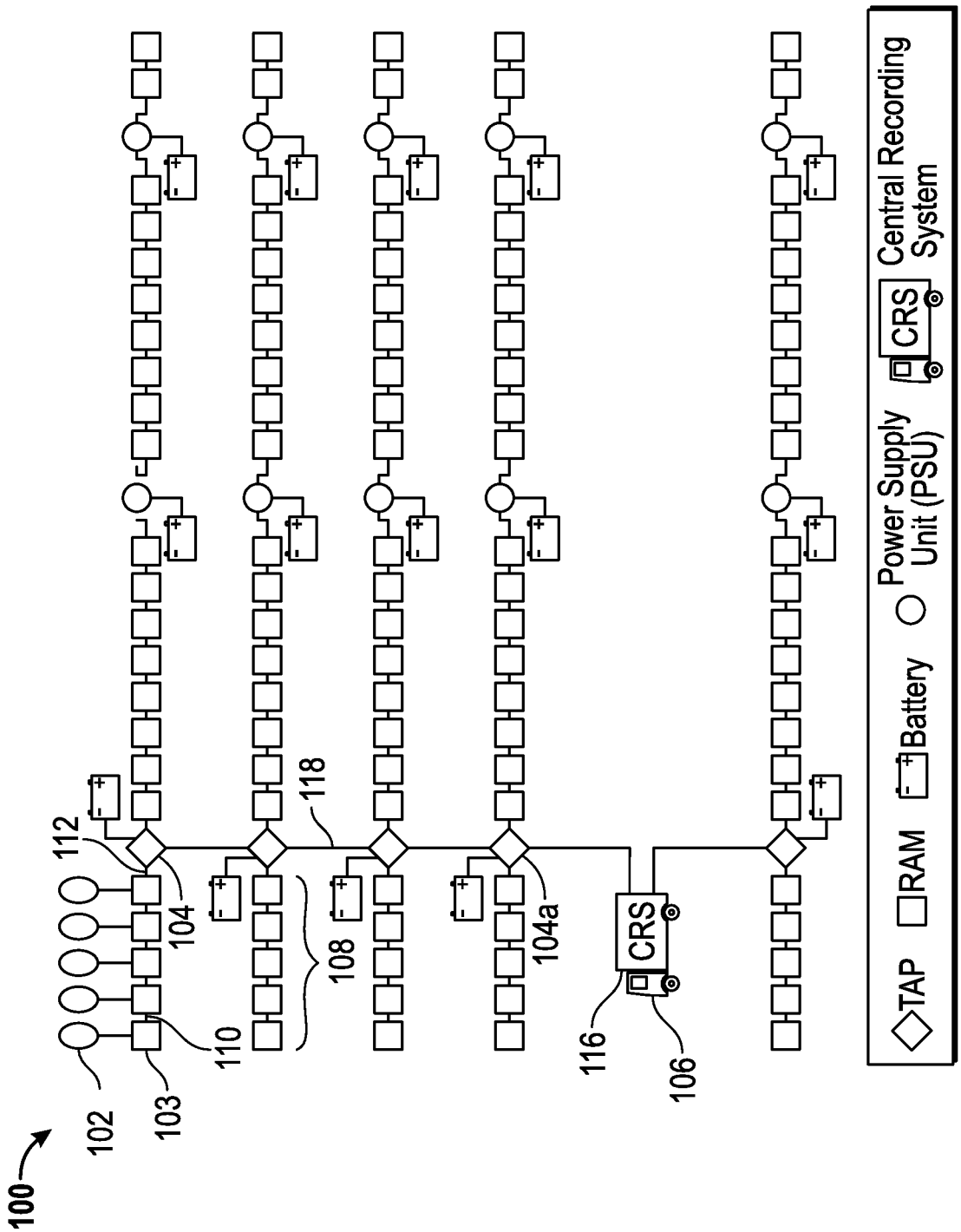
100
102
103
110
104
112
118
108
104a
116
106
CRS
TAP
RAM
Battery
Power Supply Unit (PSU)
CRS
Central Recording System

FIG. 1

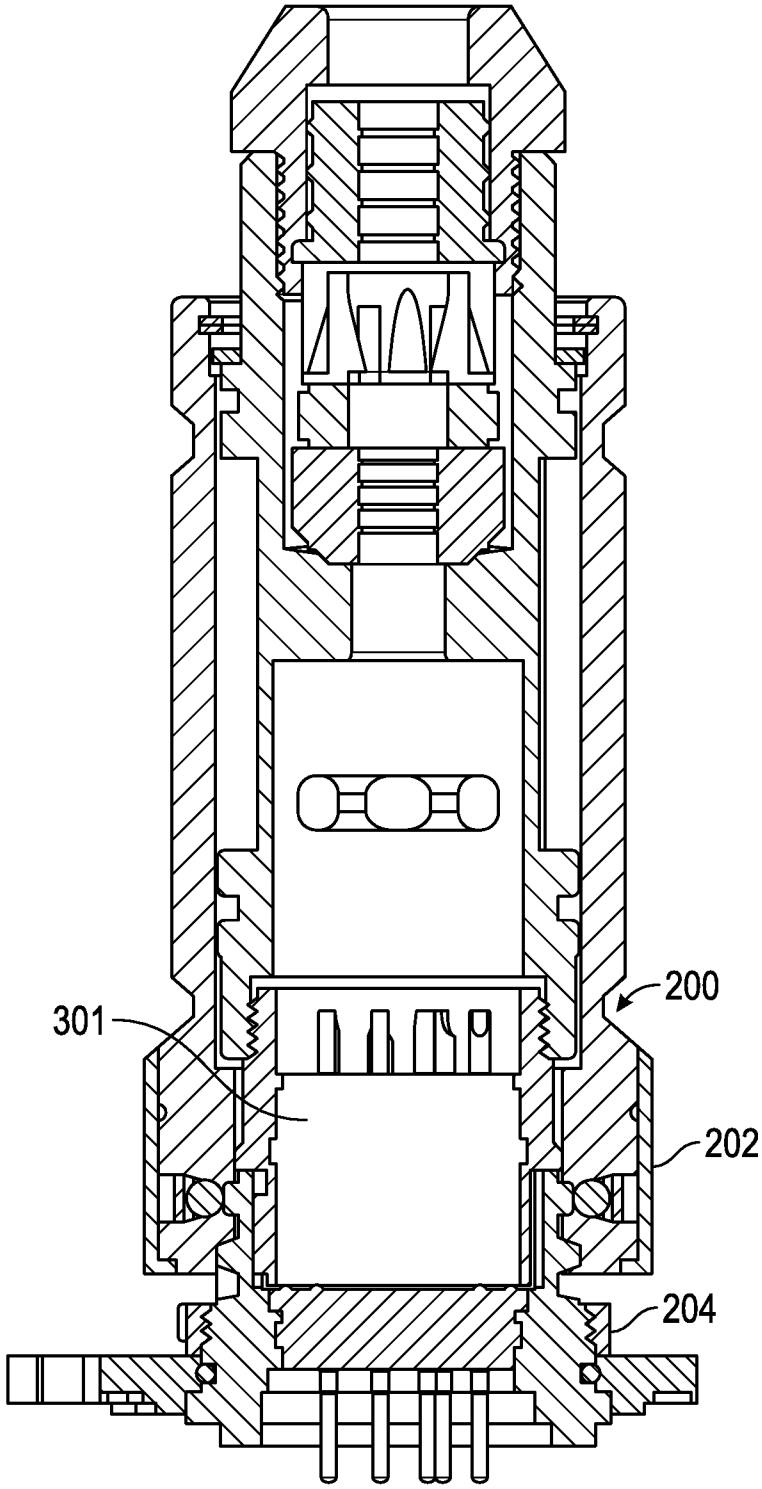

FIG. 2

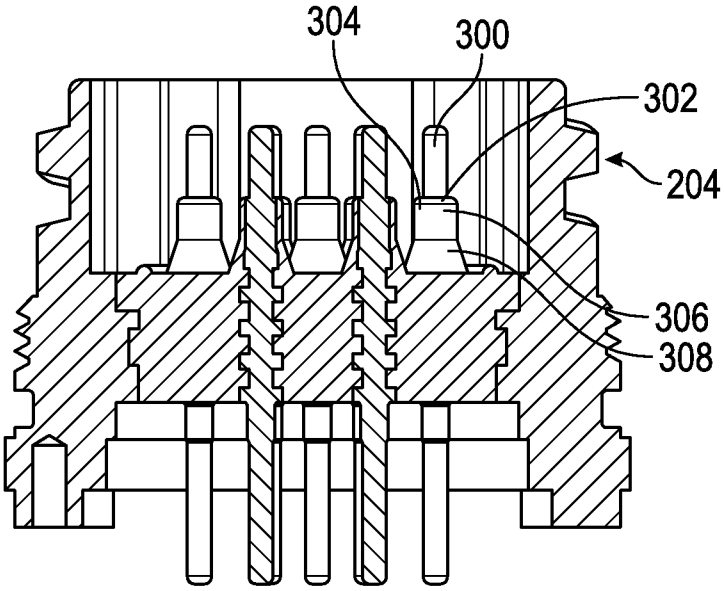

FIG. 3

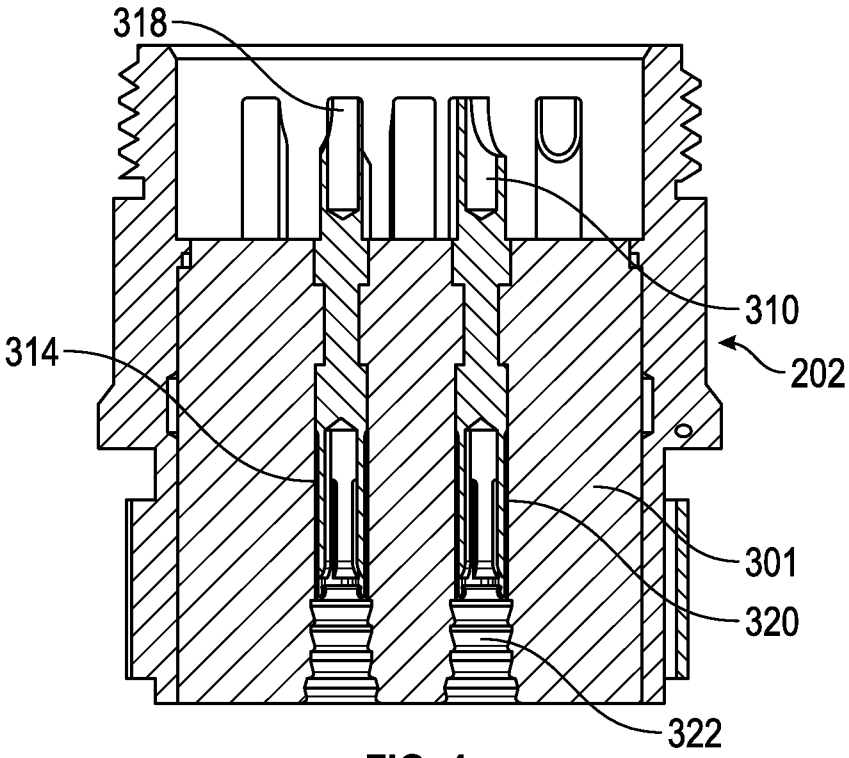

FIG. 4

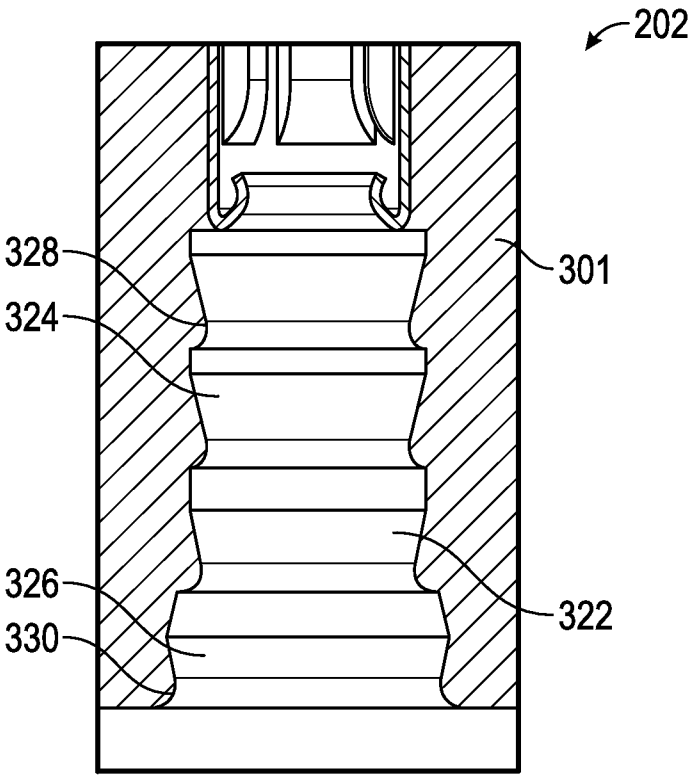
202
328
324
326
330
301
322

FIG. 5

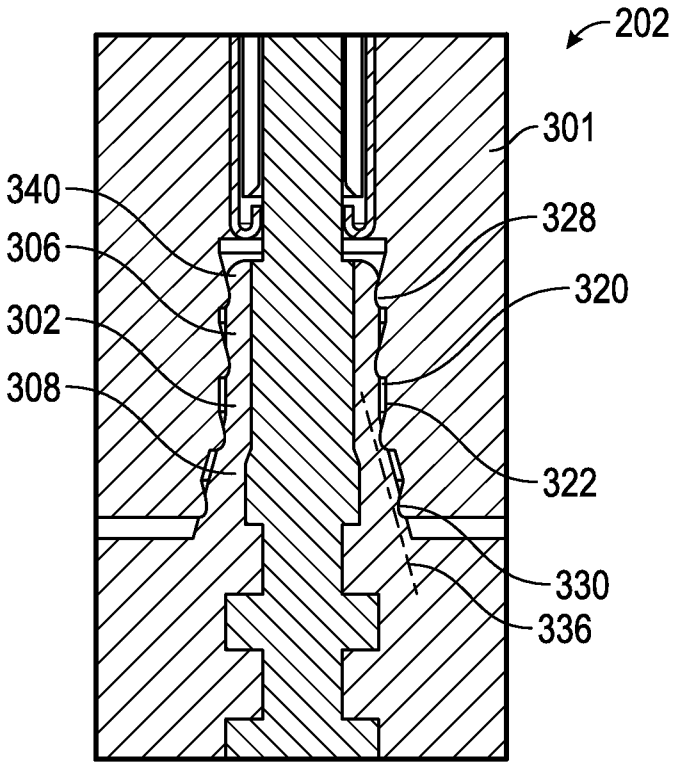
202
340
306
302
308
301
328
320
322
330
336

FIG. 6

INTERNATIONAL SEARCH REPORT

International application No.
PCT/US2013/023208

A. CLASSIFICATION OF SUBJECT MATTER
IPC(8) - H01R 13/52 (2013.01)
USPC - 439/281
According to International Patent Classification (IPC) or to both national classification and IPC

B. FIELDS SEARCHED

Minimum documentation searched (classification system followed by classification symbols)
IPC(8) - H01R 13/52, 13/523 (2013.01)
USPC - 166/250.01, 272.1, 302; 181/102, 112, 122; 367/20, 76, 154; 439/271, 272, 275, 279, 281, 282, 587, 595

Documentation searched other than minimum documentation to the extent that such documents are included in the fields searched
CPC - H01R 13/5202, 13/746 (2013.01)

Electronic data base consulted during the international search (name of data base and, where practicable, search terms used)
PatBase, Google Patents, Google

C. DOCUMENTS CONSIDERED TO BE RELEVANT

Category*	Citation of document, with indication, where appropriate, of the relevant passages	Relevant to claim No.
Y	GB 2,131,633 A (BURRAGE) 20 June 1984 (20.06.1984) entire document	1-7, 9-13
Y	US 5,711,685 A (WOOD) 27 January 1998 (27.01.1998) entire document	1-7, 9-13
Y	US 4,173,349 A (NEALE III) 06 November 1979 (06.11.1979) entire document	2, 7, 11, 13
A	US 3,945,701 A (BOEKE et al) 23 March 1976 (23.03.1976) entire document	1-13
A	US 5,595,497 A (WOOD) 21 January 1997 (21.01.1997) entire document	1-13

☐ Further documents are listed in the continuation of Box C. ☐

* Special categories of cited documents:
"A" document defining the general state of the art which is not considered to be of particular relevance
"E" earlier application or patent but published on or after the international filing date
"L" document which may throw doubts on priority claim(s) or which is cited to establish the publication date of another citation or other special reason (as specified)
"O" document referring to an oral disclosure, use, exhibition or other means
"P" document published prior to the international filing date but later than the priority date claimed
"T" later document published after the international filing date or priority date and not in conflict with the application but cited to understand the principle or theory underlying the invention
"X" document of particular relevance; the claimed invention cannot be considered novel or cannot be considered to involve an inventive step when the document is taken alone
"Y" document of particular relevance; the claimed invention cannot be considered to involve an inventive step when the document is combined with one or more other such documents, such combination being obvious to a person skilled in the art
"&" document member of the same patent family

Date of the actual completion of the international search	Date of mailing of the international search report
08 March 2013	22 MAR 2013

Name and mailing address of the ISA/US	Authorized officer:
Mail Stop PCT, Attn: ISA/US, Commissioner for Patents P.O. Box 1450, Alexandria, Virginia 22313-1450 Facsimile No. 571-273-3201	Blaine R. Copenheaver PCT Helpdesk: 571-272-4300 PCT OSP: 571-272-7774

Form PCT/ISA/210 (second sheet) (July 2009)