US 20110107784A1

(19) United States

(12) Patent Application Publication

Tippmann et al.

(10) Pub. No.: US 2011/0107784 A1

(43) Pub. Date: May 12, 2011

(54) **APPARATUS FOR BLAST FREEZING PALLETIZED PRODUCT**

(76) Inventors: **Daniel Joseph Tippmann**, Fort Wayne, IN (US); **Steve Tippmann**, Bonita Spring, FL (US); **Andrew Bobay**, Fort Wayne, IN (US); **Dale E. Budzon**, Fort Wayne, IN (US)

(21) Appl. No.: **12/879,521**

(22) Filed: **Sep. 10, 2010**

Related U.S. Application Data

(60) Provisional application No. 61/241,065, filed on Sep. 10, 2009, provisional application No. 61/295,322, filed on Jan. 15, 2010.

Publication Classification

(51) **Int. Cl.**
F25C 1/00 (2006.01)
F25D 17/04 (2006.01)

(52) **U.S. Cl.** **62/340**; 62/407

(57) **ABSTRACT**

Apparatus for blast freezing palletized products is disclosed in which tall racks have openings on at least one side that connect to a plenum chamber, against which stacked pallets can be placed one above another as well as beside one another adjacent the plenum openings, but with the rack providing only one pallet depth to optimize circulation of regular warehouse freezing air through the pallets at a rapid rate for rapid blast freezing.

As another example, there are vertically adjustable panels in a tall rack to accommodate different height palletized products stacked one above another, in a way that allows for sealing between the plenum chamber and the palletized products on one side of the palletized product without either substantial blockage of air flow through the side of the palletized product and without allowing a substantial gap between the palletized product and the plenum that would allow a substantial bypass of flow through the palletized product. In particular, as to a particularly preferred embodiment of the invention, there is disclosed the fixing of the position of adjustable panels through the use of pins that could be inserted into any one of a series of vertically arranged holes to achieve any one of multiple discrete heights that are securely positioned, yet readily adjustable. The vertical adjustability of a member that has a rigid component that may or may not also contain a cushioned or flexible seal allows for much more durability, versatility and suitability for accommodating palletized products of various heights.

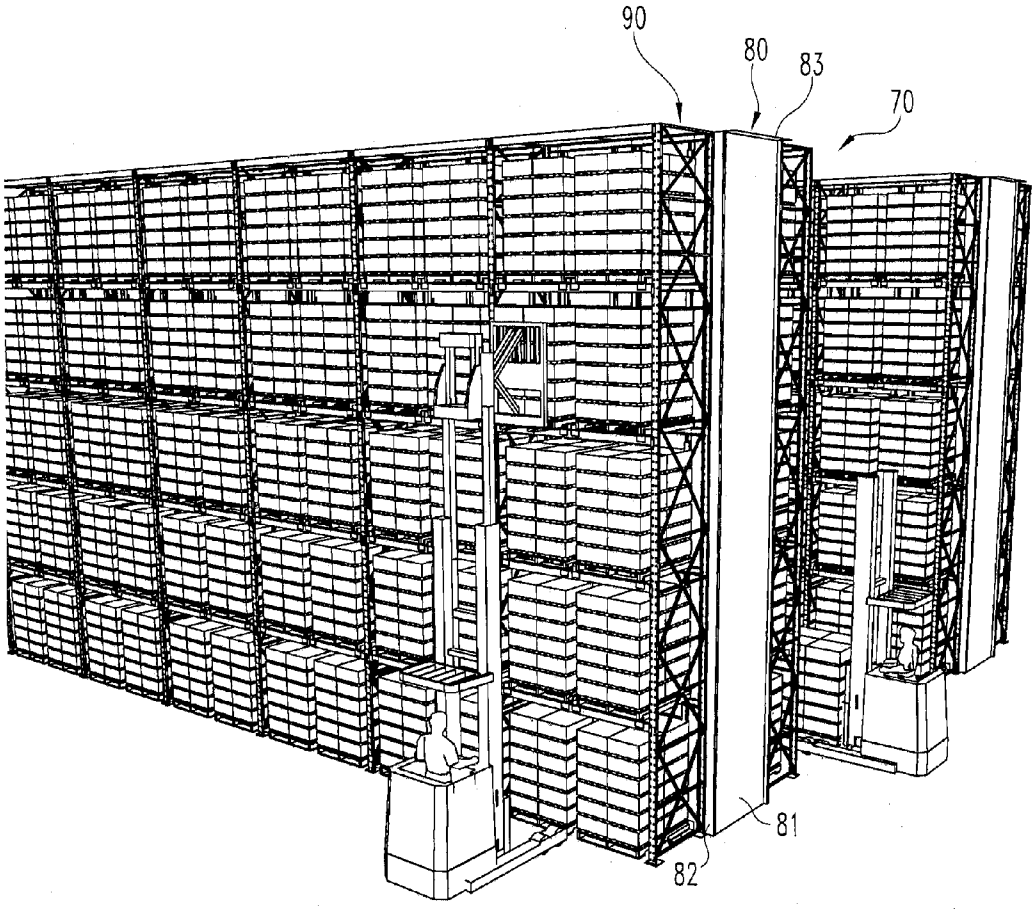

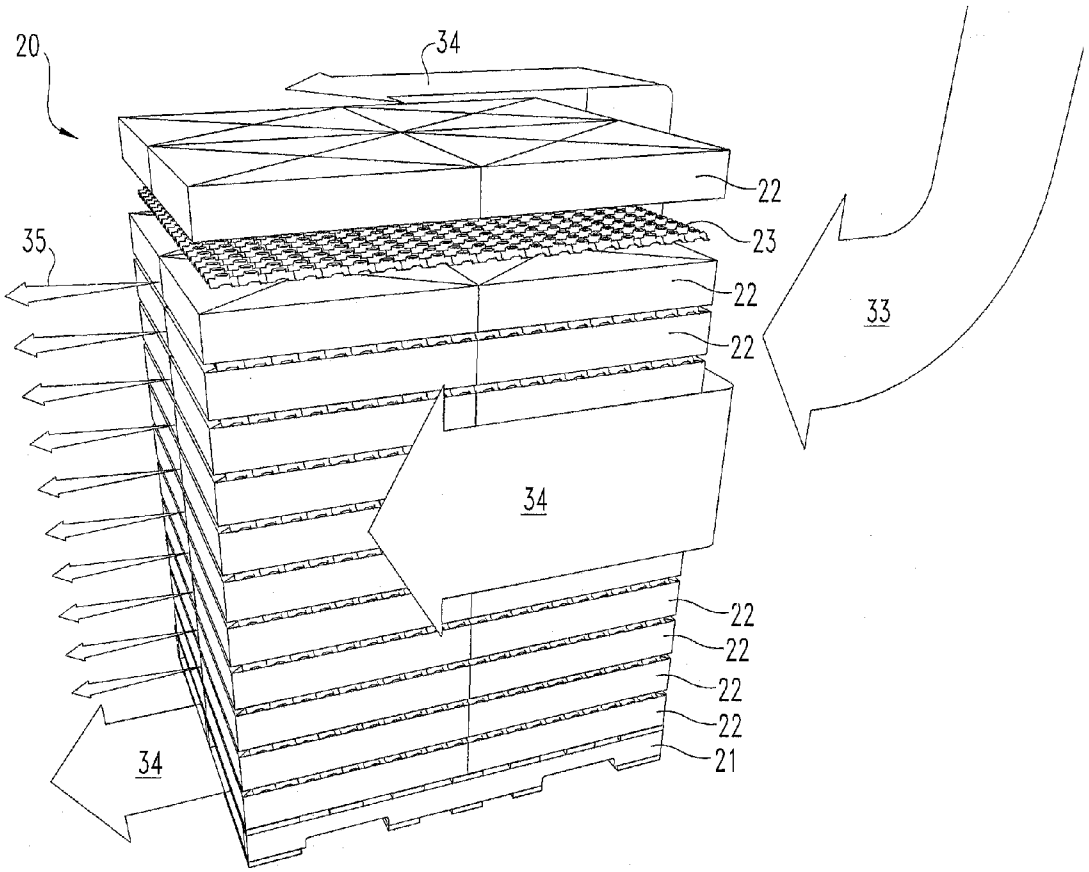

Fig. 1

(PRIOR ART)

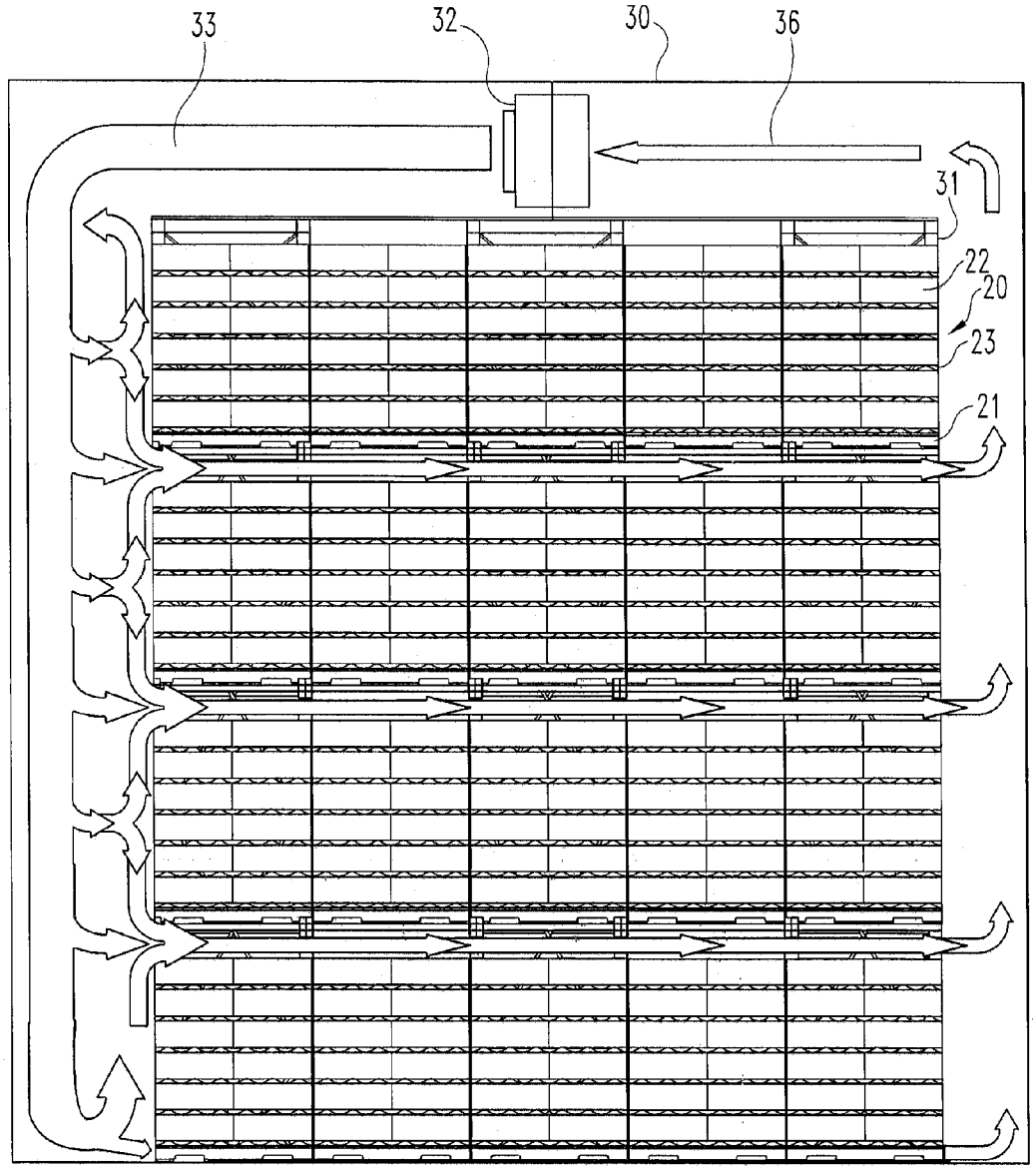

Fig. 2

(PRIOR ART)

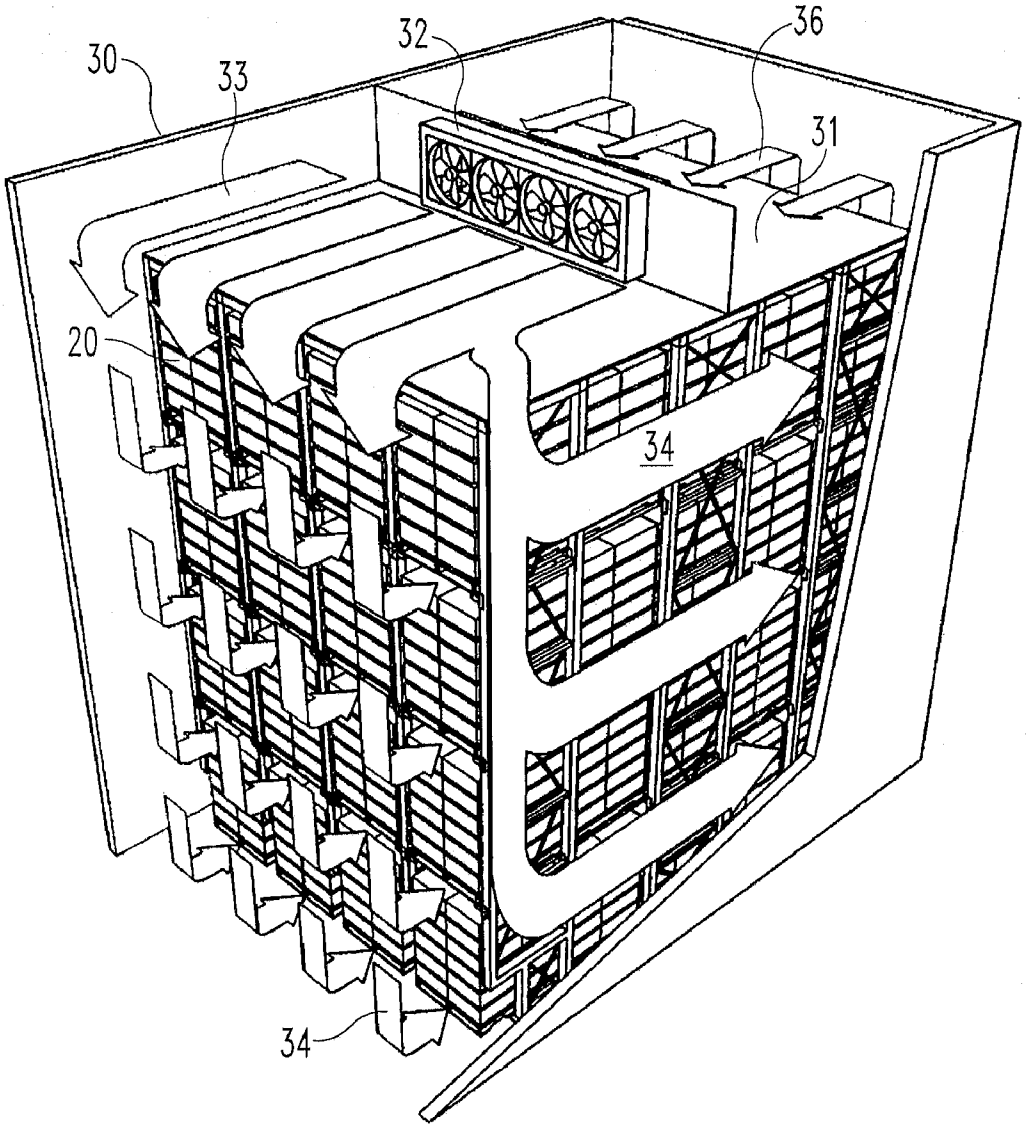

Fig. 3

(PRIOR ART)

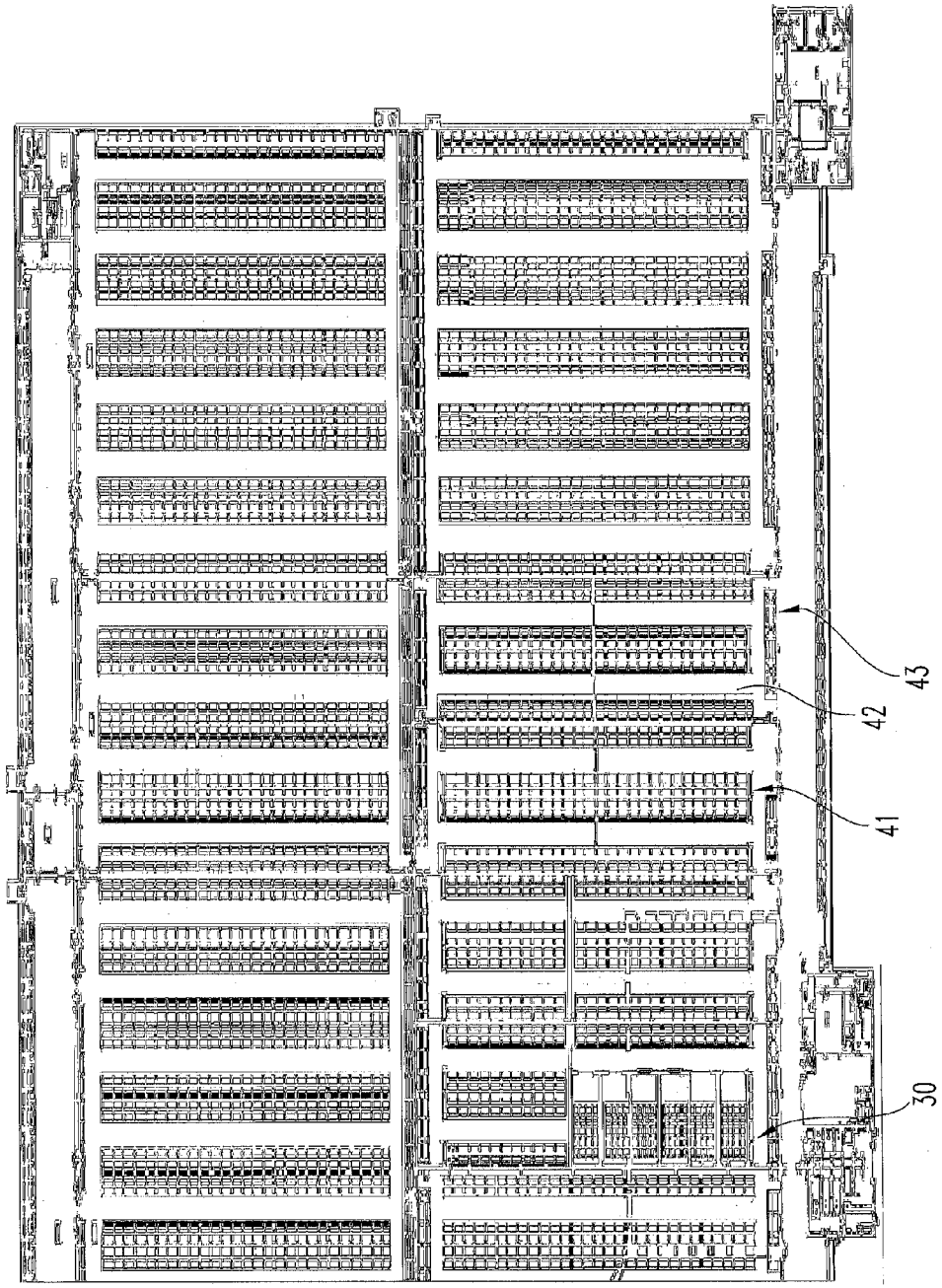

Fig. 4A
(PRIOR ART)

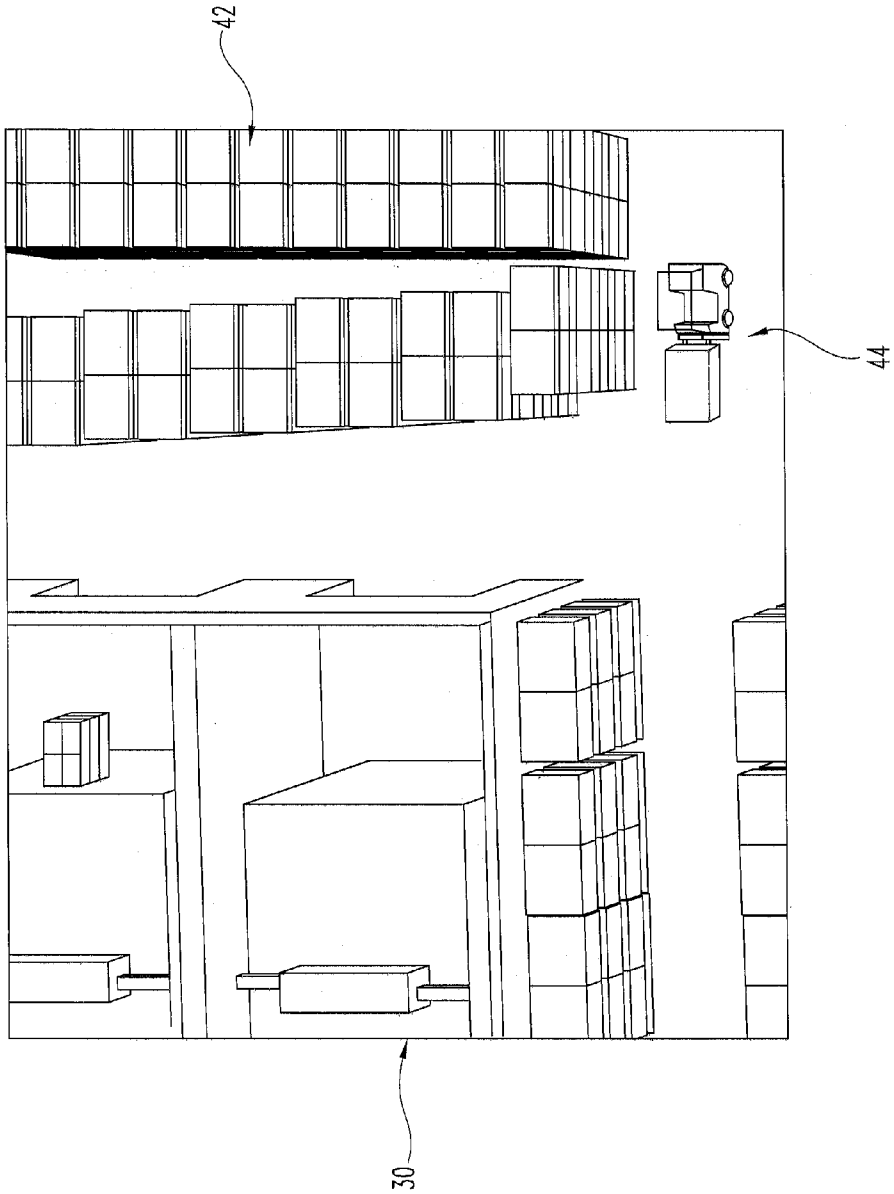

Fig. 4B
(PRIOR ART)

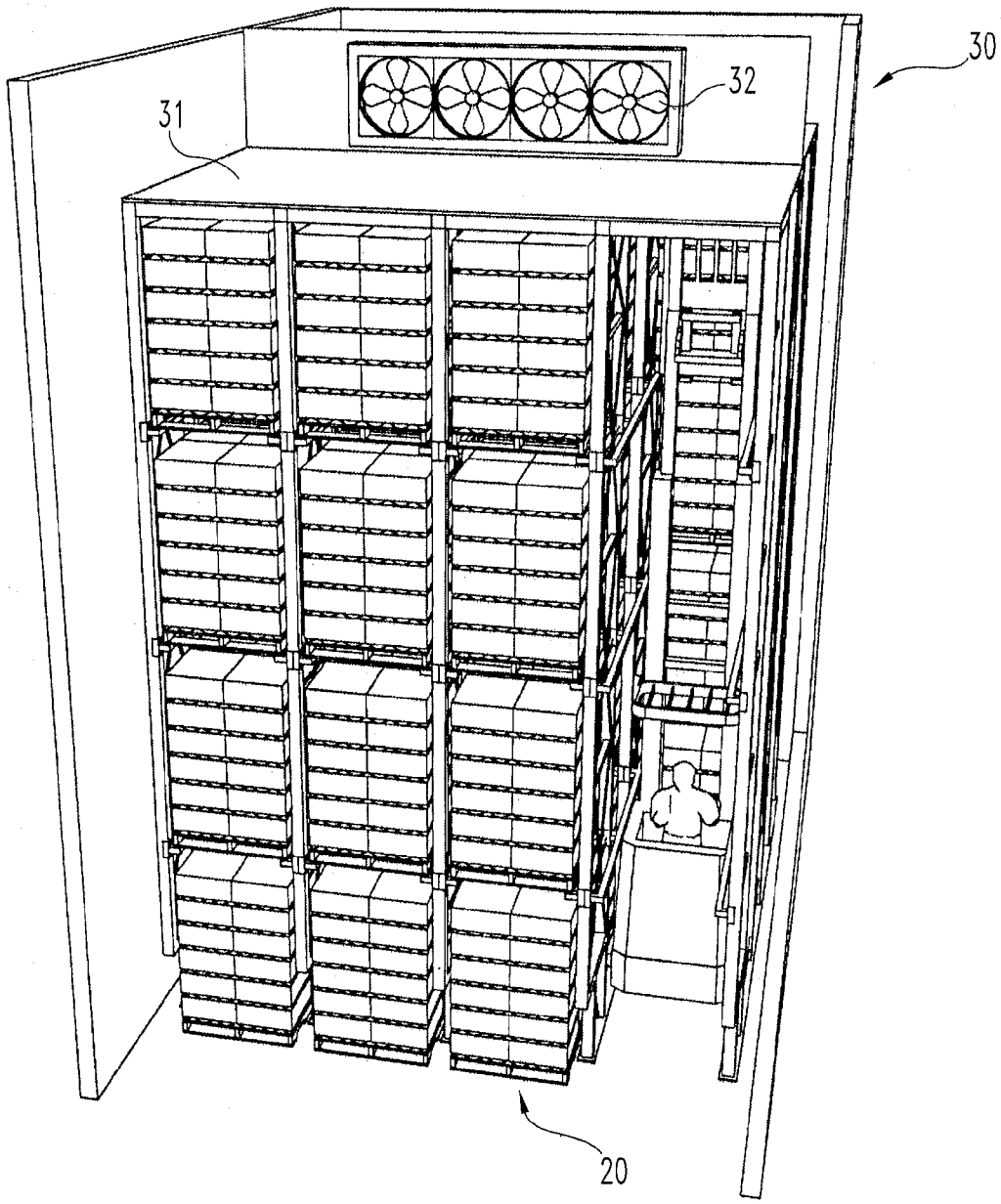

Fig. 5

(PRIOR ART)

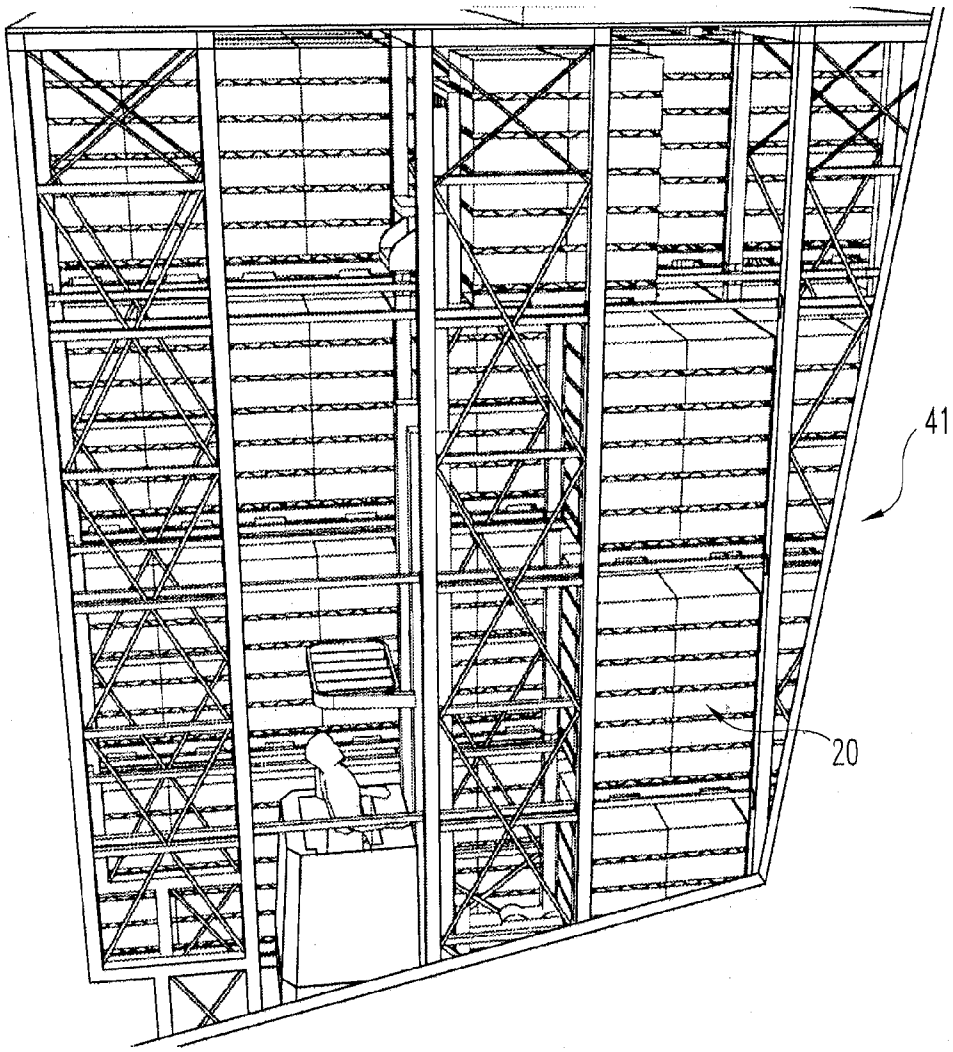

Fig. 6

(PRIOR ART)

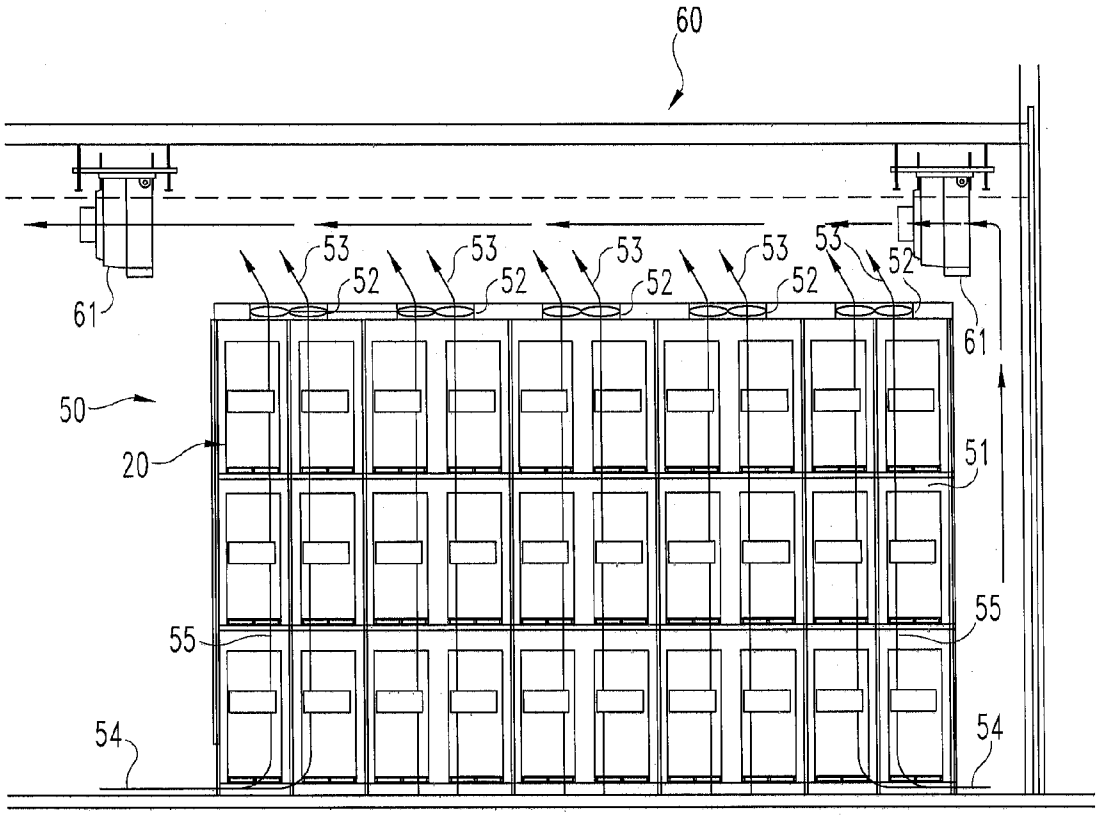

Fig. 7

(PRIOR ART)

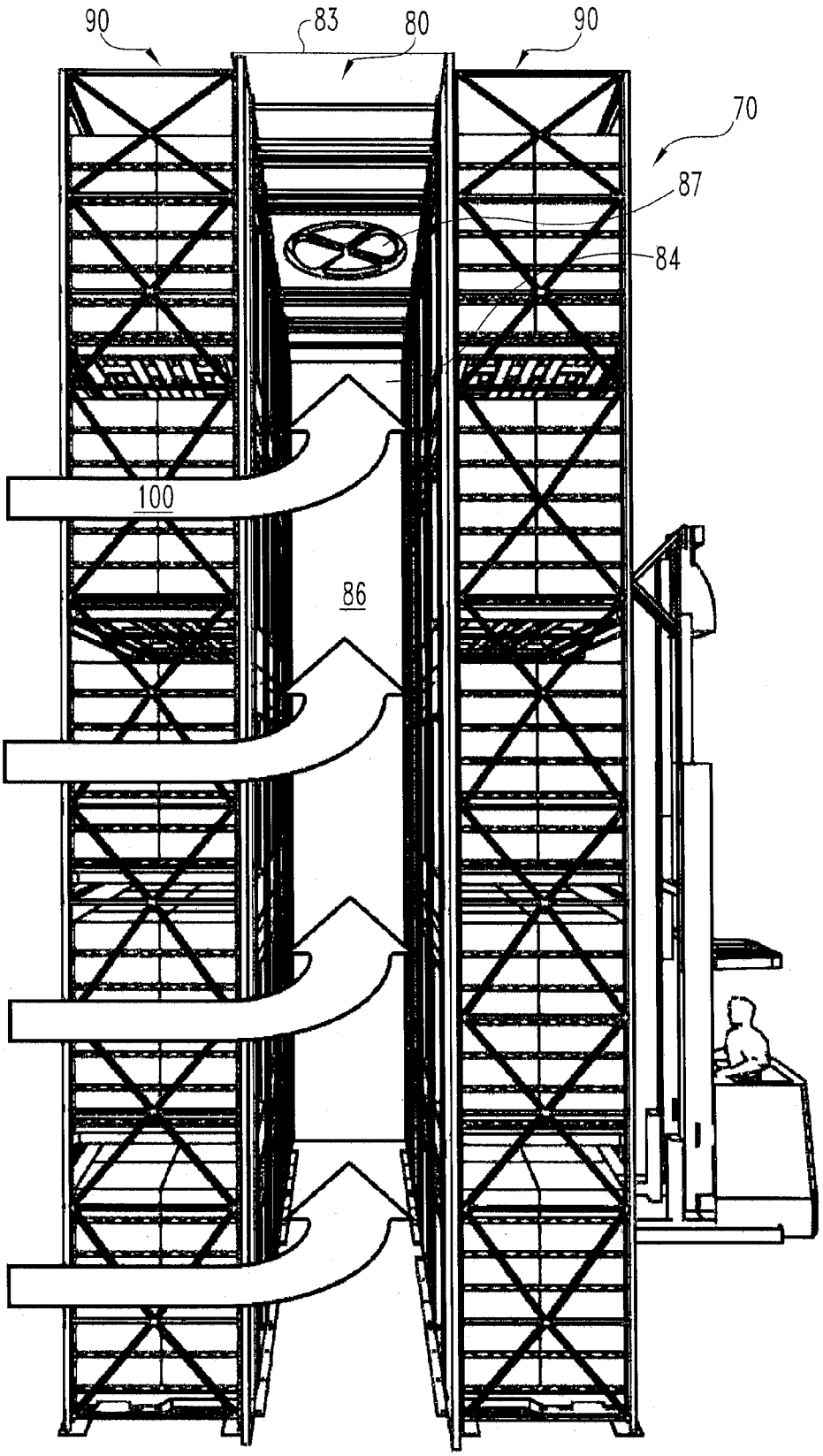

Fig. 8

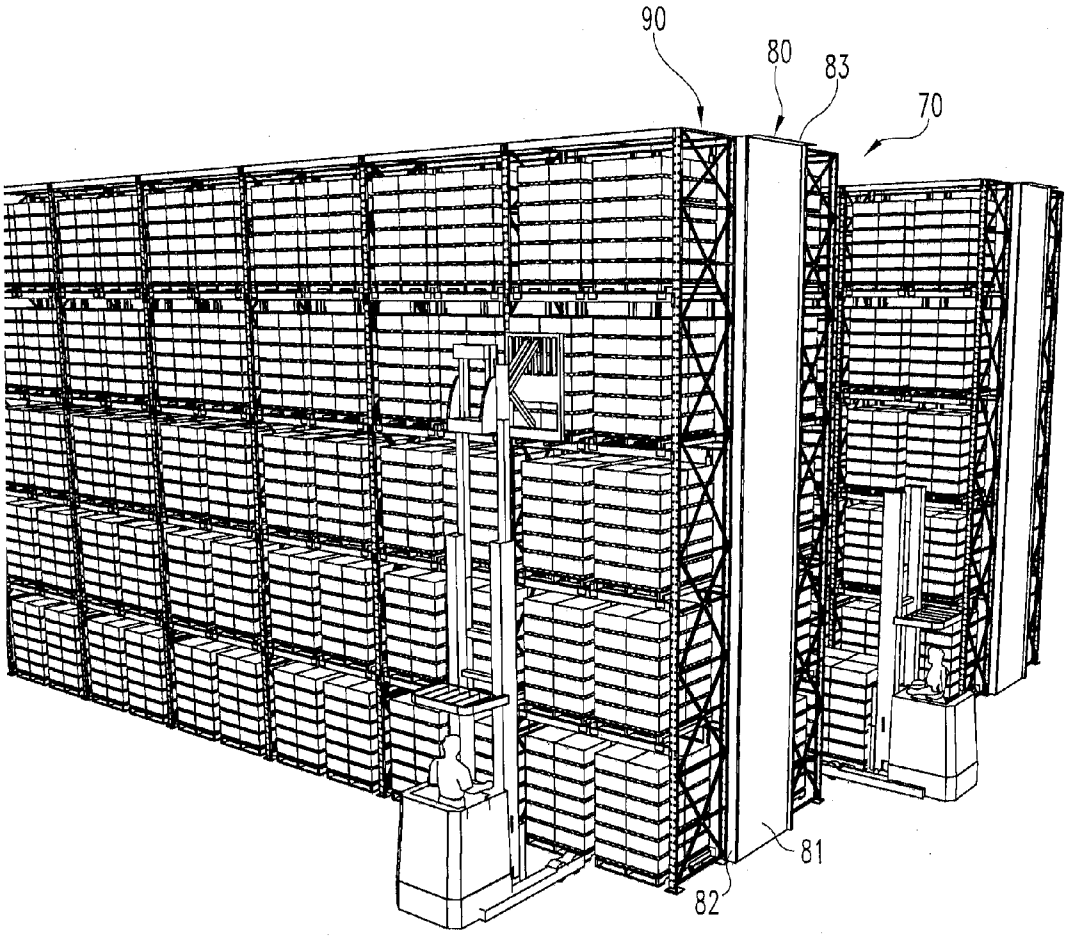

Fig. 9

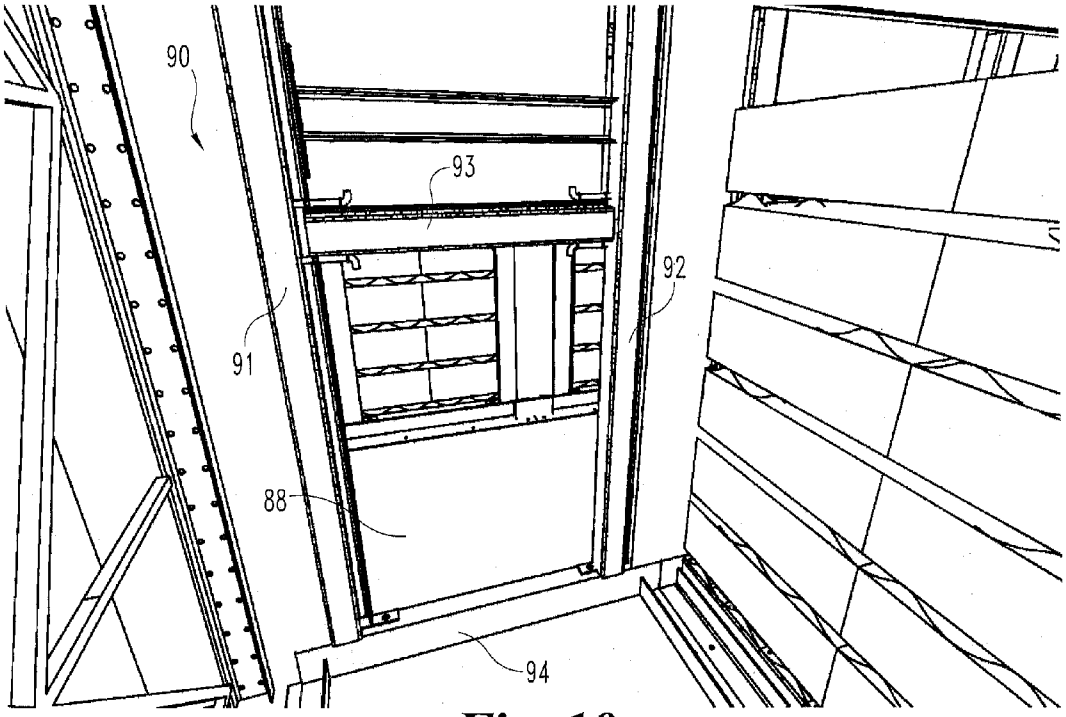

Fig. 10

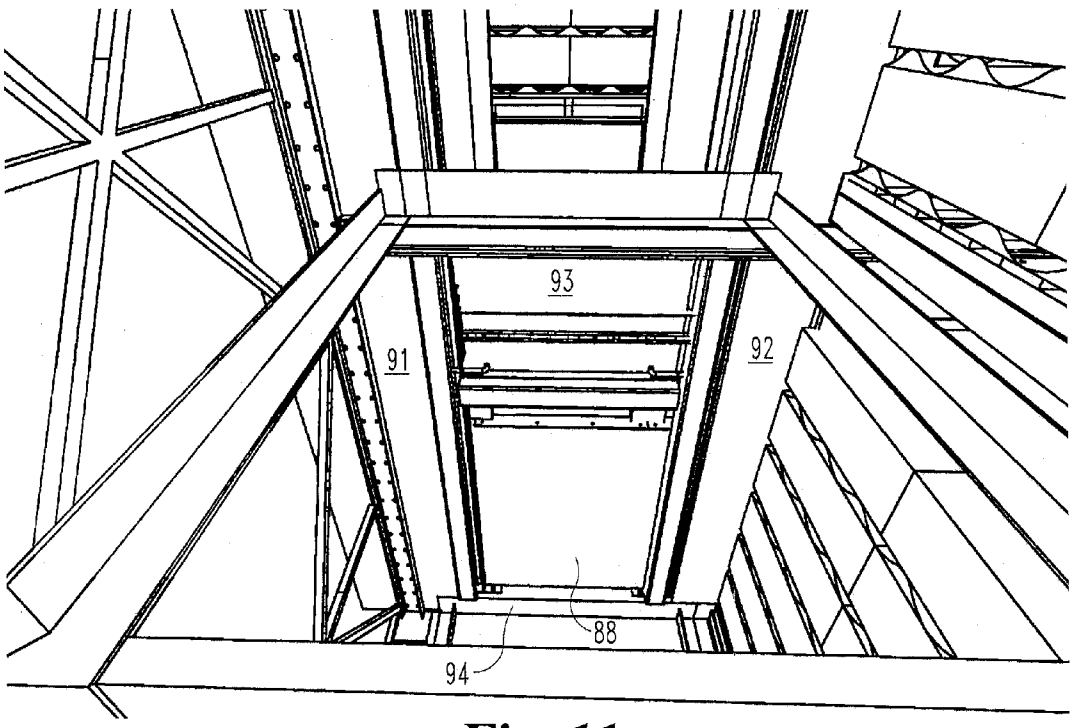

Fig. 11

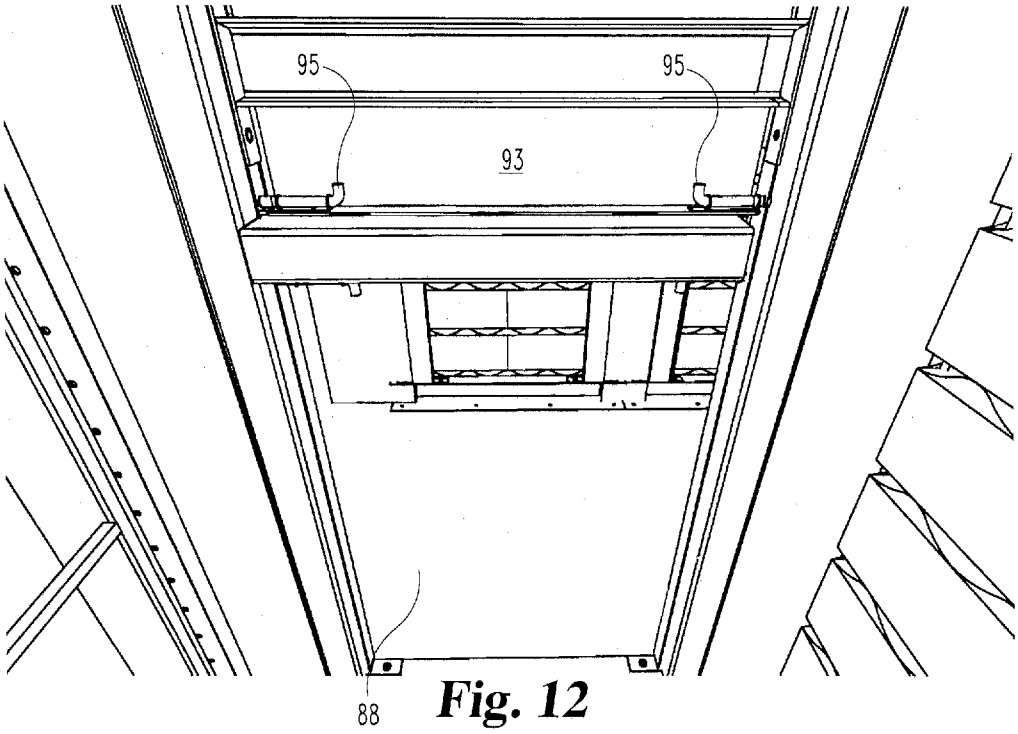

Fig. 12

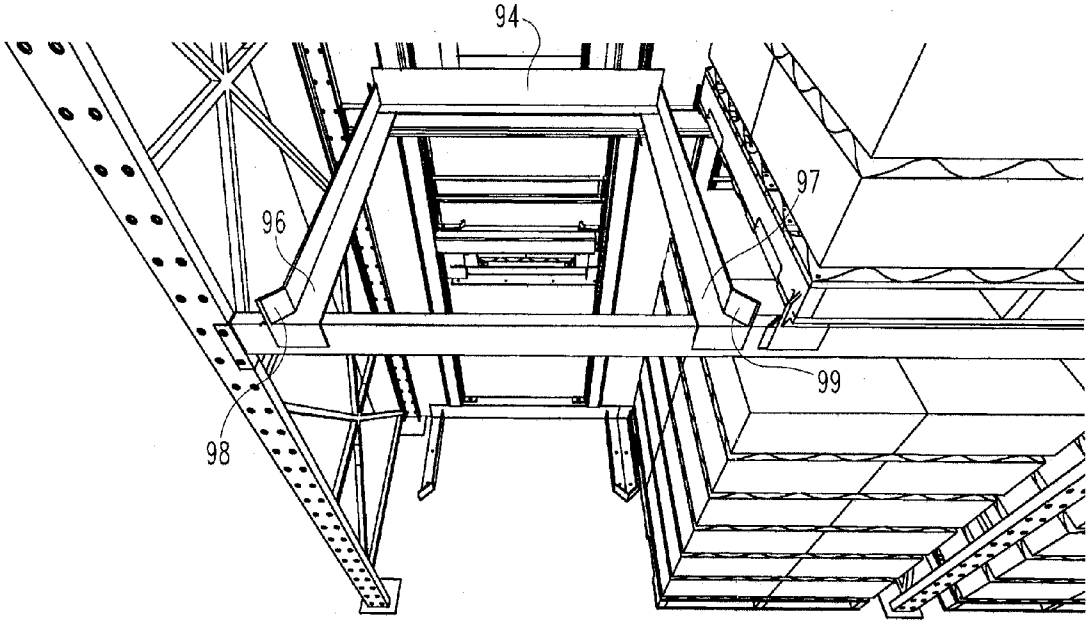

Fig. 13

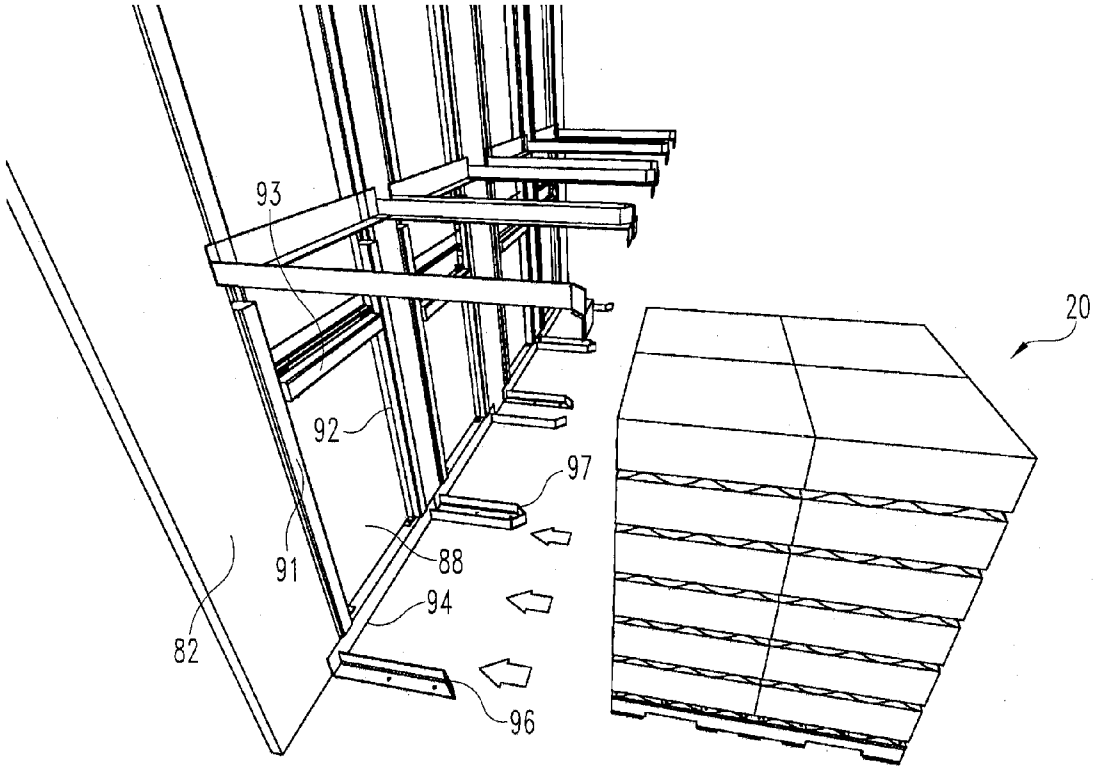

Fig. 14A

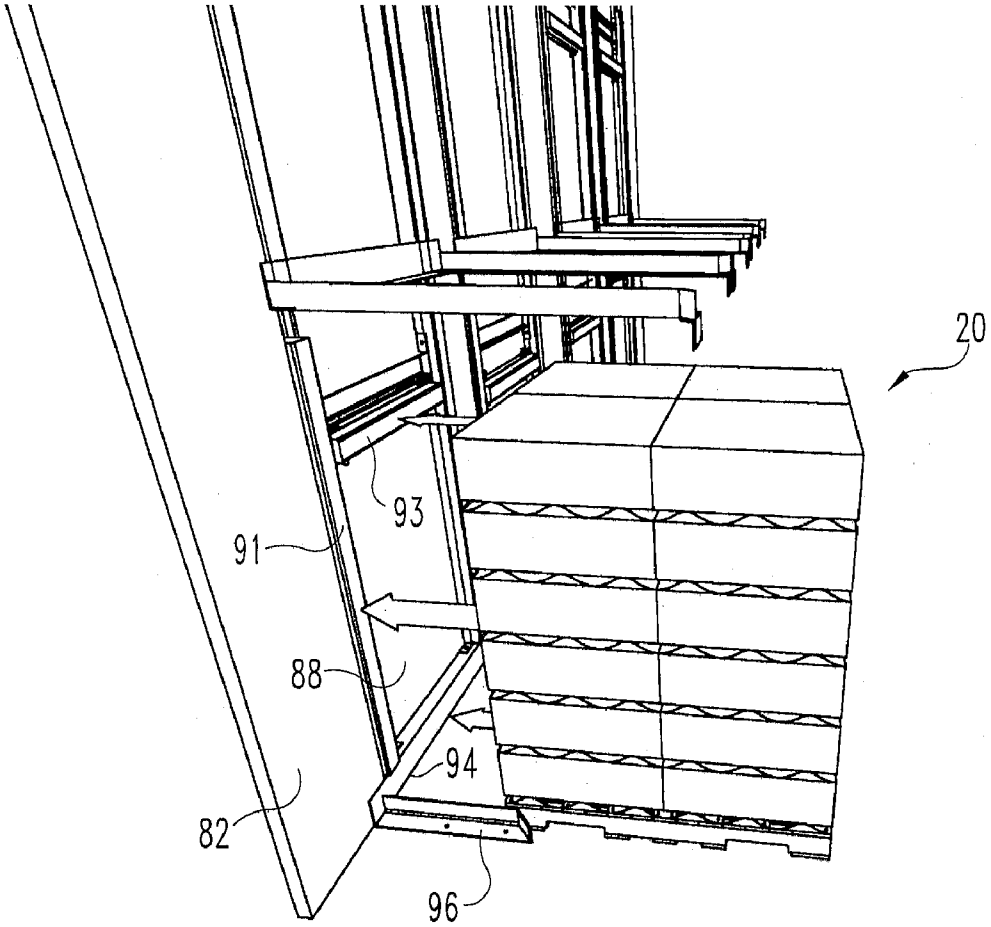

Fig. 14B

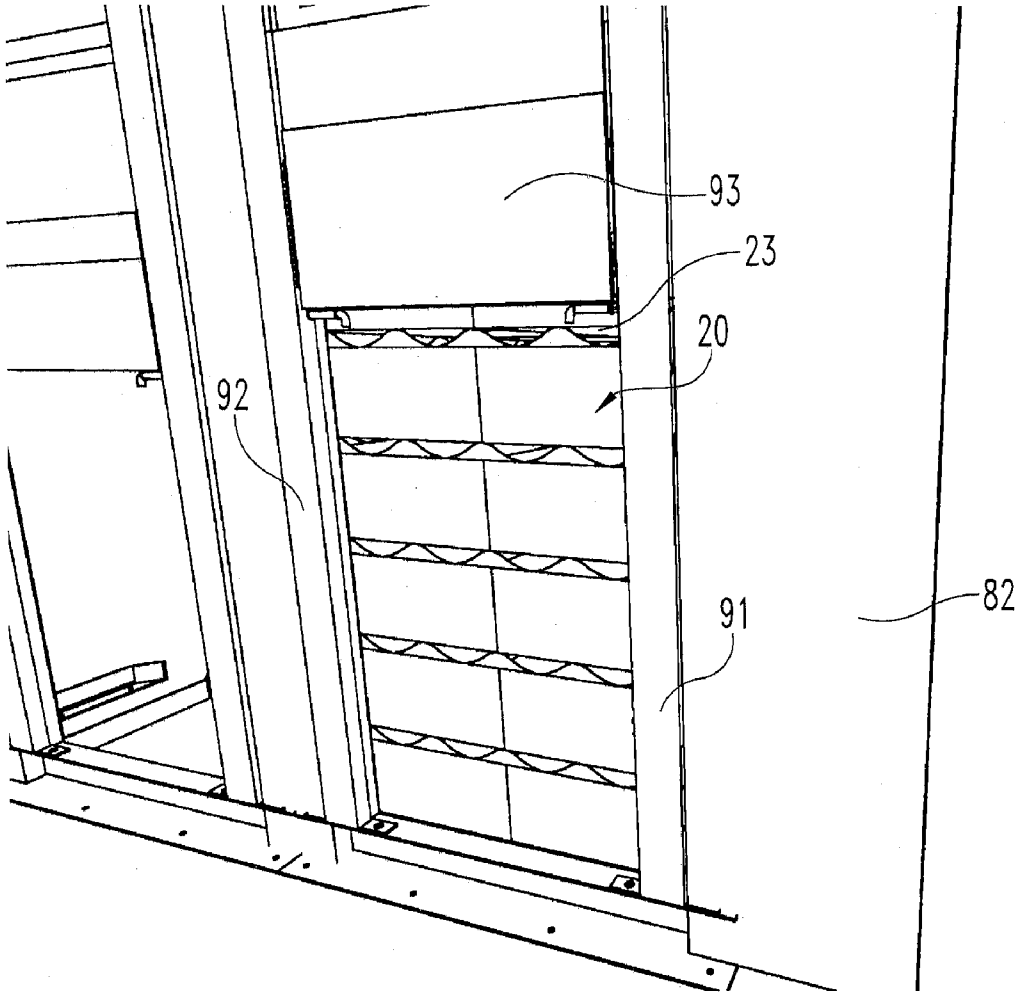

Fig. 14C

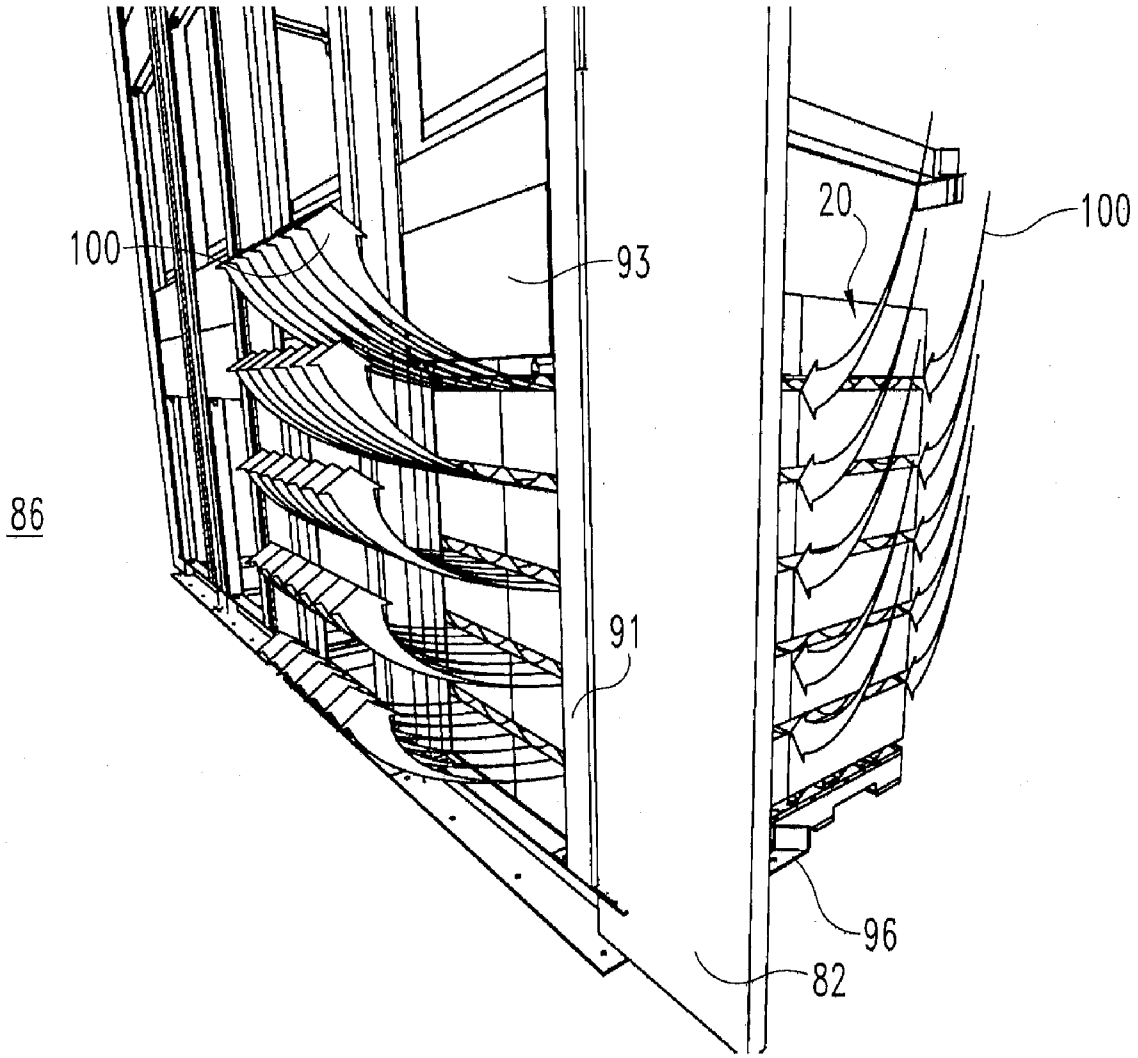

Fig. 14D

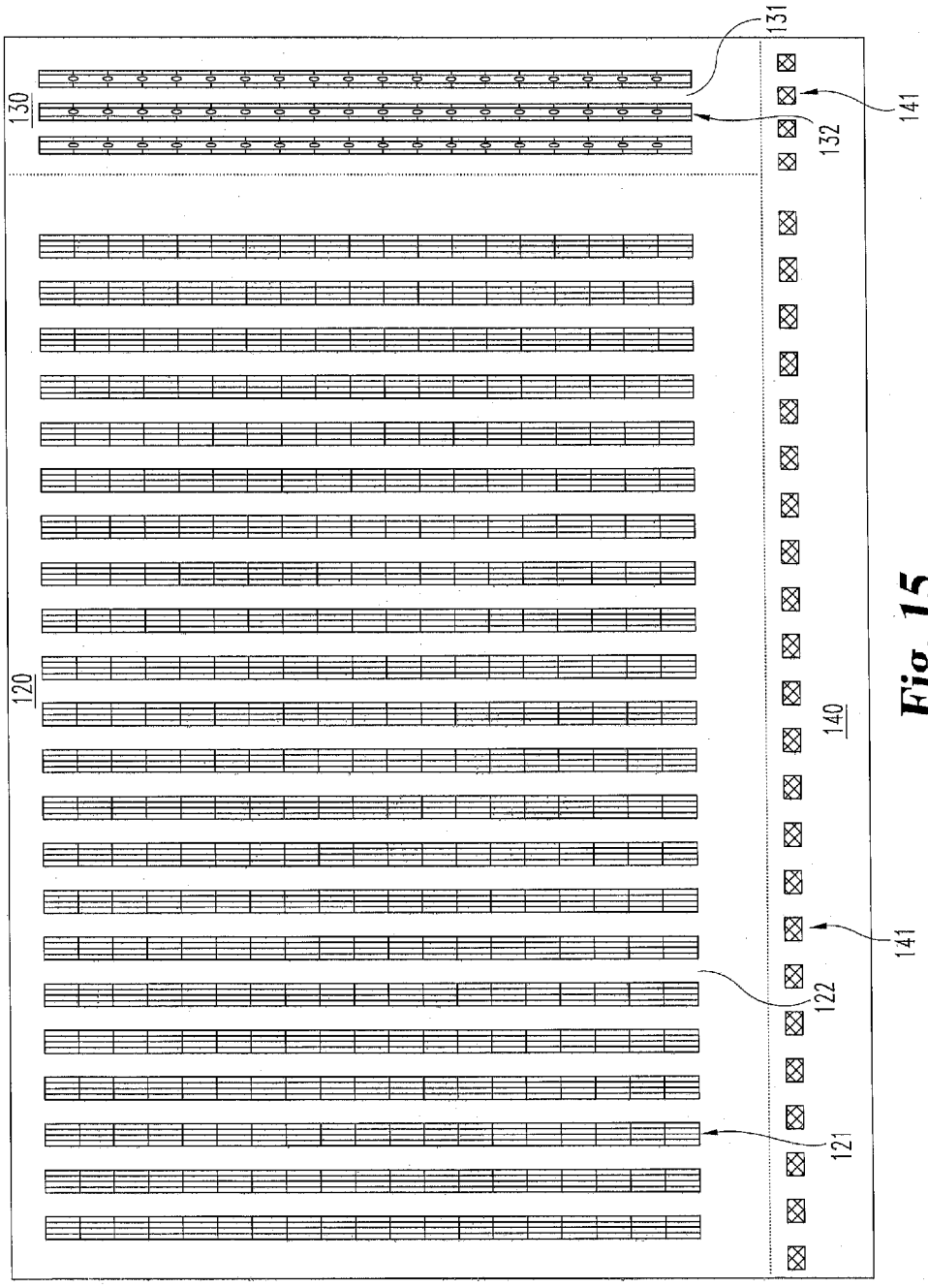

Fig. 15

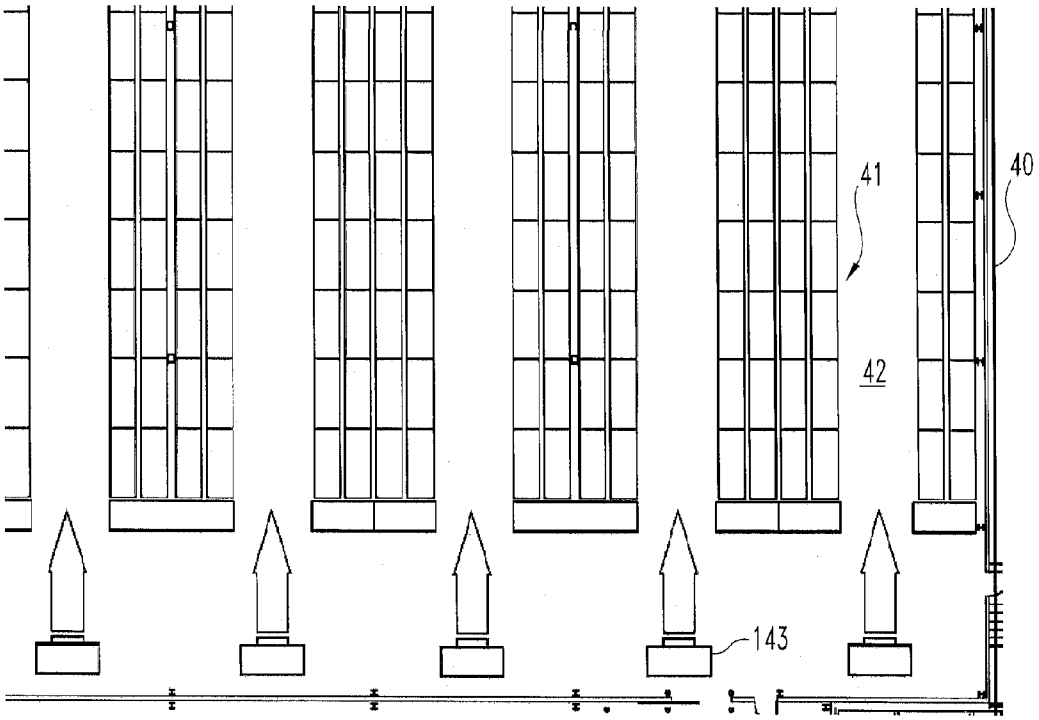

Fig. 16

(PRIOR ART)

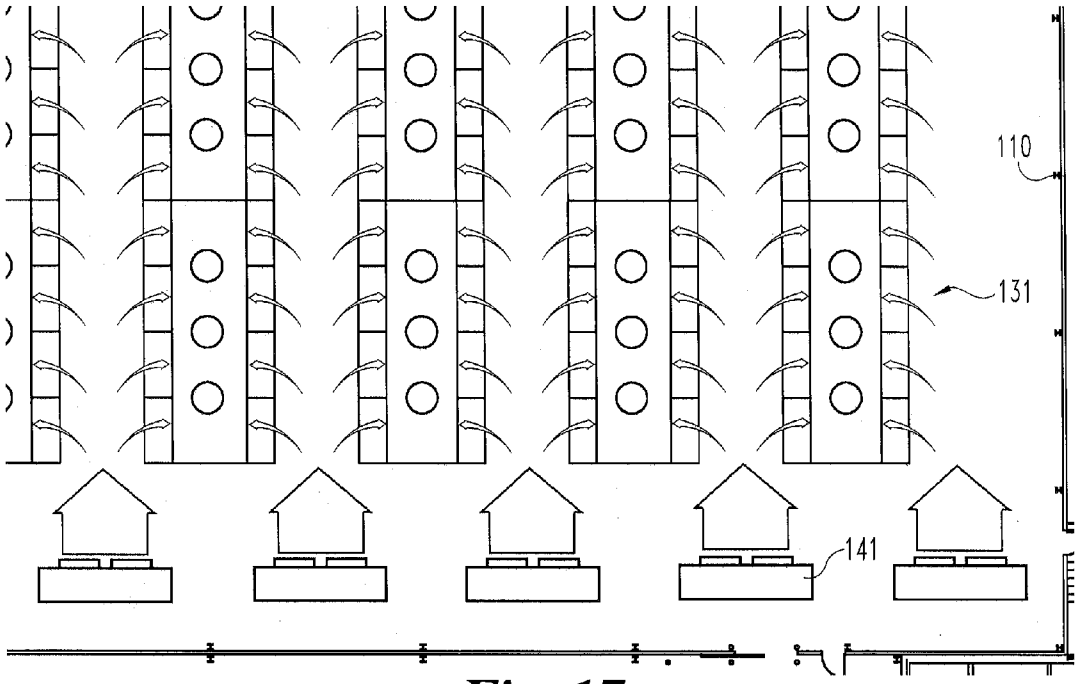

Fig. 17

APPARATUS FOR BLAST FREEZING PALLETIZED PRODUCT

CROSS-REFERENCE TO RELATED APPLICATION

[0001] This application claims the benefit of U.S. Provisional Applications No. 61/241,065 filed on Sep. 10, 2009 and U.S. Provisional Application No. 61/295,322 filed on Jan. 15, 2010 which are hereby incorporated by reference.

TECHNICAL FIELD OF THE INVENTION

[0002] Embodiments of the present invention generally relate to a blast freezing of various products (e.g., fruits, vegetables, meat, seafood, baked goods, etc.). Embodiments of the present invention specifically relate to an energy efficient use of freezing air in the process of blast freezing various palletized products.

BACKGROUND OF THE INVENTION

[0003] Blast freezing is a known process for quickly exposing food products to air chilled to very low temperatures (e.g., −40° F./−40° C.) for a period of time sufficient to completely freeze the food products. FIG. **1** illustrates an example of a palletized product **20** suitable for blast freezing. Palletized product **20** includes a pallet **21** supporting a stacked arrangement of a plurality of food product containers **22** with spacers **23** between rows of containers **22**. Such spacers are known in the art for allowing the passage of freezing air between the layers of food product containers. Alternatively or concurrently, the food product containers **22** may have openings in their sides to allow for air flow directly through the containers. FIGS. **2** and **3** illustrate an example of a dedicated blast freezing room **30** enclosing a pallet rack **31** for seating multiple palletized products **20**. Pallet rack **31** includes pallet seats arranged in four (4) columns and four (4) rows with each row having a depth covering five (5) pallet seats. Thus, at max capacity, pallet rack **31** could seat eighty (80) palletized products **20**.

[0004] In operation, blast freezing room **30** is maintained at approximately −40° F./−40° C. and fans **32** atop pallet rack **31** are activated to direct a supply flow **33** of freezing air through the palletized products **20** at a specified flow rate to quickly freeze the palletized products **20**. Ideally, the freezing air uniformly flows through spacers **23** to equally freeze the palletized products **20** within approximately the same amount of time. However, as best shown in FIGS. **1** and **3**, much of the freezing air follows flow paths **34** around and between the palletized products **20**. Less freezing air than desired follows flow paths **35** through spacers **23**, as flow paths **35** are in closer contact with the food to be frozen. The limitation in flow through paths **35** is the natural result of flow paths **34** having less resistance to air flow than flow paths **35**. Furthermore, as best shown in FIG. **2**, the freezing air flowing through the pallets in flow path **35**, can pass through five (5) consecutive pallets and be sequentially warmed by each pallet, so as to make the cooling of the pallets on the exit side slower than those on the entrance side.

[0005] Additionally, the flow rate through the series of five (5) consecutive pallets tends to have quite a bit of drag. The result is an increase in the amount of time required to adequately freeze all of the palletized products **20**, accompanied by the use of colder temperatures from a separate freezing system dedicated to the blast freezing process.

[0006] FIG. **4**A illustrates a top view of an exemplarily warehouse, freezing storage room **40** having several blast freezing rooms **30** for blast freezing the palletized products **20** and pallet racks **41** for storing frozen palletized products **20**. The pallet racks **41** are arranged to form aisles **42** for providing access to pallet racks **41** via a fork lift truck. To maintain the frozen status of the stored palletized products **20**, air-cooling evaporators **43** are activated to direct a flow of freezing air through aisles **42**. One drawback of freezing storage room **40** is the closely arranged blast freezing rooms **30** limit maneuvering of palletized products by fork lift trucks **44** as shown in FIG. **4**B. Another drawback of freezing storage room **40**, as with blast freezing room **30**, is the pallet racks **31** and **41** as respectively shown in FIGS. **5** and **6** have depths of multiple palletized products **20** that make it difficult and time consuming for fork lift operators to navigate when seating or removing a palletized product **20** from the pallet racks **31** and **41**.

[0007] FIG. **7** illustrates another example of a prior art blast freezing apparatus **50** located within a warehouse **60** for frozen products. Blast freezing apparatus **50** has a pallet rack **51** for seating multiple palletized products **20** with or without spacers **23**. Pallet rack **51** includes pallet seats arranged in ten (10) columns of stacked palletized products, three (3) high. Thus, at minimum capacity, pallet rack **51** could seat thirty (30) palletized products **20**. Optionally, the depth could be more than one (1), allowing for sixty (60) or ninety (90) or more palletized products **20**.

[0008] In operation, air-cooling evaporators **61** are activated to maintain the warehouse **60** at approximately −40° F./−40° C. There are fans **52**, without any additional associated evaporators, that are activated to direct a rapidly moving supply flow **54** of freezing air in the warehouse through the palletized products **20** at a specified flow rate to blast freeze the palletized products **20**. Ideally, the freezing air uniformly follows flow paths **55** along the sides of palletized products **20** to equally freeze the palletized products **20** within approximately the same amount of time. Fans **52** return the freezing air to the warehouse **60** via a return path **53** extending from fans **52**. Because blast freezing apparatus **50** has roughly equal air pressure from one side to the other across the palletized products **20**, the flow of freezing air is not as high as might be desired through any horizontal spacers **23** that may be used within palletized products **20**. Additionally, the vertical flow paths **55** associated with blast freezing apparatus **50** passes beside three (3) palletized products **20**, rather than past just one (1).

[0009] As a still further example of prior art, U.S. Patent Application Publication 2006/0185528 to Gerald Tippmann et al. discloses an array of palletized products in a warehouse that have a dedicated fan to bring freezing warehouse air rapidly through the palletized products with only a single pallet thickness for the air path without having a dedicated refrigeration system associated with the air handler. U.S. Pat. No. 3,621,672 to Meredith discloses a blast cooling system that uses racks with seals around pathways from an air plenum to force cooling, non-freezing air through palletized food products in a refrigerated warehouse. Meredith discloses that the air flow can be in either direction as may be desired. Along similar lines, U.S. Pat. No. 7,017,366 to Bottom discloses both vertical and horizontal flexible seal elements to

engage the palletized product to direct cooling, non-freezing air through palletized product, rather than around it.

SUMMARY OF THE INVENTION

[0010] The invention consists of all of the differences from the above described prior art that would not have been obvious to a person of ordinary skill in the art at the time we made our invention, and as are more particularly set forth in the claims. As one example, tall racks have openings on at least one side that connect to a plenum, against which stacked pallets can be placed one above another as well as beside one another only one pallet deep for circulation of regular warehouse freezing air through the pallets at a rapid rate for rapid blast freezing.

[0011] As another example, there are vertically adjustable panels in a rack to accommodate different height palletized products stacked one above another, in a way that allows for sealing between the plenum and the palletized products. In particular, as to a particularly preferred embodiment of the invention, the prior art did not provide for the fixing of the position of adjustable panels through the use of pins that could be inserted into any one of a series of vertically arranged holes to achieve any one of multiple discrete heights that are securely positioned, yet readily adjustable. The vertical adjustability of a member that has a rigid component that may or may not also contain a cushioned or flexible seal allows for much more durability, versatility and suitability for accommodating palletized products of various heights.

BRIEF DESCRIPTION OF THE DRAWINGS

[0012] FIG. **1** illustrates a palletized product with horizontal ventilating spacers permitting air flow between adjacent layers of food product as is known in the art;

[0013] FIGS. **2** and **3** illustrates a first exemplary prior art blast freezing apparatus using palletized product as shown in FIG. **1**;

[0014] FIGS. **4**A and **4**B illustrate a prior art warehouse floor plan incorporating a large quantity of stored frozen palletized product, and showing several specialized rooms for blast freezing using the apparatus of FIGS. **2** and **3**;

[0015] FIG. **5** illustrates a loading of a palletized product on the blast freezing apparatus shown in FIGS. **2** and **3** as known in the art;

[0016] FIG. **6** illustrates a loading of a palletized product on a storage rack shown in FIG. **5** as known in the art;

[0017] FIG. **7** illustrates another prior art blast freezing apparatus that uses racks positioned within a freezing warehouse, where the racks have dedicated air handlers but no associated evaporators for additional cooling, and are not separated by walls or doors from other palletized product being stored in the warehouse;

[0018] FIGS. **8** and **9** illustrate a blast freezing apparatus incorporating the present invention;

[0019] FIGS. **10-12** illustrate a sealing barrier vertically adjustable with pins, each engaging a desired one of a vertical array of holes to maintain a desired height to accommodate a sealing relationship with various height palletized products, in accordance with the apparatus shown in FIGS. **8** and **9**;

[0020] FIG. **13** illustrates a pallet guide device which is a part of the apparatus of FIGS. **8** and **9**, and which includes angled end members slightly wider at the entrance to assist in alignment when inserting a palletized product;

[0021] FIGS. **14**A-**14**D illustrate an exemplary operation of the blast freezing apparatus shown in FIGS. **8** and **9**;

[0022] FIG. **15** illustrates an exemplary embodiment of a blast freezing portion of a warehouse that incorporates the blast freezing apparatus shown in FIGS. **8** and **9**;

[0023] FIG. **16** illustrates an exemplary operation of the storage portion of a freezing warehouse as known in the art that is along side in the same large warehouse room that includes the blast freezing portion shown in FIG. **15**; and

[0024] FIG. **17** illustrates an exemplary operation of the blast freezing portion of the warehouse shown in FIG. **15**.

DETAILED DESCRIPTION OF THE PREFERRED EMBODIMENTS

[0025] For the purposes of promoting an understanding of certain principles of the invention, reference will now be made to the embodiments illustrated in the drawings and specific language will be used to describe the same. It will nevertheless be understood that no limitation of the scope of the invention is thereby intended, and alterations and modifications in the illustrated device, and further applications of the principles of the invention as illustrated therein are herein contemplated as would normally occur to one skilled in the art to which the invention relates. While the embodiments described below, for example, relate to blast freezing of various products (e.g., fruits, vegetables, meat, seafood, baked goods, etc.) for purposes of illustration, it will be appreciated that the principles of the present invention are equally applicable to the blast freezing of any article.

[0026] A blast freezing apparatus in accordance with the presently disclosed embodiments incorporates a plenum space defined by a plenum chamber, and one or more pallet racks for seating palletized products adjacent the plenum space whereby freezing air may flow between the palletized products and the plenum space. Preferably the flow is from the palletized product located in a freezing warehouse and into the plenum space, although the opposite direction can alternatively be used. The blast freezing apparatus in accordance with the presently disclosed embodiments may further incorporate a sealing barrier for seating the palletized products against the plenum chamber. In practice, the plenum chambers, the pallet racks and the sealing barriers as well as the palletized products do not have any limitations as to configurations, dimensions and material composition. Thus, those having ordinary skill in the art will appreciate how to structurally configure and dimension as well as materially compose additional embodiments of the present invention from the descriptions herein of FIGS. **8-15** and **17**.

[0027] FIGS. **8** and **9** illustrate a blast freezing apparatus **70** incorporating a plenum chamber **80** and a pair of pallet racks **90**. Plenum chamber **80** has a rectangular configuration of walls **81-85** defining a plenum space **86**. Embedded with top wall **83** is one or more fans **87**, which function as air handlers. The fans **87** do not have associated evaporators, as the evaporators that service the warehouse room in which the apparatus is located suffice to provide the needed freezing air.

[0028] Formed within side walls **82** and **85** are air channels **88** leading into plenum space **86** as will be further described herein in connection with FIGS. **10-13**. Optionally, not shown, the plenum space can incorporate vertical dividers, and plural fans **87**, so that the entire array does not have to be filled to seal the air flow, but rather one or more columns can

be filled and the remainder can be left open, and just the fans **87** above the filled ones can be operated for partial loads of palletized product **20**.

[0029] Pallet rack **90** includes pallet seats **91** arranged in twelve (12) columns and five (5) rows with each row having a depth covering a single pallet seat. In other words, pallet rack **90** has a single pallet depth.

[0030] Blast freezing apparatus **70** further incorporates sealing barriers **90** for each air channel **88** as shown in FIGS. **10-12**. Sealing barriers **90** encircle air channels **88** for purposes of seating palletized products against plenum chamber **80** as will be further described herein in connection with FIGS. **14**A-**14**D. Each sealing barrier **90** includes seals **91-94**. Seals **91** and **92** vertically extend along side walls **82** and **85** adjacent a side perimeter of air channels **88** as best shown in FIGS. **10** and **11**. Seal **93** extends along the top perimeter of air channels **88** as best shown in FIGS. **10-12**, and may be vertically adjusted up or down by use of pins **95**, each of which engage a corresponding hole in a vertical series of holes arrayed to allow various discrete heights for use with different heights of palletized product **20**. While pins **95** are preferred, alternatives for fixing either a discrete or continuous vertical position can be used, such as but not limited to ratchet mechanism, gear engaging or other mechanical positioning mechanism that will be apparent to those of skill in the art. Seal **94** serves as a pallet stop and extends along a bottom perimeter of air channels **88** as best shown in FIG. **13**.

[0031] In order to improve the sealing effect of sealing barriers **90**, they can have a surface facing the palletized products that is resilient, such as flexible tubing, or an elastomeric material, foam, spring loaded surface, or any other type of engaging material or surface mechanism, including those used in the prior art Meredith or Bottom patents referenced above. Preferably, each of the barriers **90**, including seal **93**, include rigid members that provide a rearward stop for pallets as they are inserted into position. As yet a further, less preferred alternative, palletized products **20** can be positioned touching one another, side by side, with vertical sealing barriers then only being used at each side of the combined array of pallets, and along the top and bottom of the array, so as to provide perimeter sealing on a stacking rack that encompasses plural palletized products.

[0032] While there is described above the preferred arrangement with the palletized product **20** engaging a seat against plenum chamber **80**, alternative, less preferred arrangements could also be used, so long as at some location in the passage of freezing air through the stacked palletized products **20**, the freezing air is mostly confined to flowing through the stacked products in the racks rather than around them. As one example, pivoting flaps or expandable tubing fixed to the racks could directly engage or nearly engage the midpoint of the top and sides of the stacked palletized product so as to direct the bulk of the freezing air through the stacked palletized products. When the palletized products are being inserted or removed from their stacked array on the racks, the pivoting flaps or expanding tubing would be retracted away from the palletized products, but when they are in position for blast freezing, the flaps or expanding tubing would be moved close to or touching the palletized products to optimize the blast freezing process.

[0033] The same could be done at the front of the stacked palletized products, or elsewhere anywhere along the direction of air flow, so long as the freezing air flow is mostly confined to flowing through the stacked products rather than around them. Thus the plenum can be void of any palletized product as in the preferred rack design, or it can contain part or all of the palletized products in these alternative rack designs.

[0034] Blast freezing apparatus **70** further incorporates a pair of guide rails **96** and **97** as best shown in FIG. **13** per pallet seat of pallet rack **90**. It should be noted that at the outside ends of the guide rails, the vertical elements are wider apart than along the rest of the guide rails. This is accomplished in the preferred embodiment by an angled portions **98** and **99** on each side, but could also be accomplished by an outwardly curved portion, or other wider configuration, so as to more easily enable initial alignment of a palletized product being inserted into position on the rack. The increase in width at the outside ends of the guide rails is preferably at least 5% greater than the width of the guide rails where they meet seal **94**, and most preferably about 10% greater.

[0035] To blast freeze a palletized product **20**, a seating of a palletized product **20** involves a guiding of the palletized product **20** to sealing barrier **90** via guide rails **96** and **97**, using angled portions **98** and **99** to aid in initial alignment, as sequentially shown in FIGS. **14**A-**14**C. If necessary, prior to or subsequent to guiding the palletized product **20** to sealing barrier **90**, seal **93** is vertically adjusted up or down to close any potential air gaps between air channel **88** and a top perimeter of the palletized product **20** while maintaining air flow passage for the top spacer **23** of the palletized product **20** as best shown in FIG. **14**C, as viewed from inside the plenum. Upon palletized product **20** being properly sealed, fans **87** are activated to cause a uniform flow **100** of freezing air within the palletized product **20** in a substantially horizontal direction primarily through the spacers **23** into plenum space **86** as best shown in FIG. **14**D. The flow rate of freezing air through the palletized product **20** is preferably greater than 50 feet per minute and most preferably greater than 100 feet per minute. With these flow rates, the temperature difference between the air temperature and the desired product temperature can be substantially less than in other rack mounted blast freezing units. The temperature difference can be as low as about 10° F., rather than the about 30° F. or more as is found in other rack mounted blast freezing units. A typical temperature goal is 0° F. for the product being blast frozen, and a typical warehouse temperature is −10° F.

[0036] The use of a single depth pallet rack with a vertically adjustable upper plenum opening member is preferred in conjunction with the seal barrier around the perimeter of the opening so as to provide a very efficient arrangement to rapidly and efficiently blast freeze the palletized products **20**. This allows an array (having at least a height of at least two pallet assemblies and a width of at least two pallet assemblies) to blast freeze economically. Increasing the array to 3 by 6 (height by width) or more preferably 4 by 8 or 5 by at least 10 (height by width) further adds to the efficiencies.

[0037] FIG. **15** illustrates a freezing warehouse **110** having a storage section **120**, a blast freezing section **130** and an air-cooling section **140**. Storage section **120** includes rows of storage pallet racks **121** spatially arranged to form aisles **122**. Each pallet rack **121** may have, as examples, a single pallet depth or a multiple pallet depth for providing easy access to the stored palletized products. Blast freezing section **130** includes rows of blast freezing apparatuses (e.g., blast freezing apparatus **70** of FIGS. **8** and **9**) also spatially arranged to form aisles **131** in warehouse **110**. The single pallet depth of the pallet racks of apparatuses **130** provides easy access to the

seated palletized products. Air-cooling section **140** includes a row of air-cooling evaporators **141** for providing freezing air within blast freezing room **110** for both the freezing of palletized products in section **130** and the storage of frozen palletized products in section **120**.

[0038] Alternatively, the storage pallet racks of storage section **120** may be omitted and replaced by additional blast freezing apparatuses **130**. Typically, in a warehouse, storage occupies more than twice the space as the blast freezing apparatus, and preferably occupies more than 10 times the space of the blast freezing apparatus, and most preferably even more.

[0039] FIG. **16** illustrates prior art freezing storage room **40** shown in FIG. **4**. It can be compared with FIG. **17** which illustrates a room **110** that contains the blast freezing apparatus of the invention. In the preferred embodiment, the two will be placed adjacent one another, to combine in one large commonly cooled room, regular warehouse storage and rack based blast freezing with seal directed horizontal freezing air flow through stacked in a rack, palletized products. Such combination is as shown in FIG. **15**.

[0040] While the invention has been illustrated and described in detail in the drawings and foregoing description, the same is to be considered as illustrative and not restrictive in character, it being understood that only the preferred embodiment has been shown and described and that all changes and modifications that come within the spirit of the invention are desired to be protected.

What is claimed is:

1. A blast freezer for an array of pallet assemblies each including a plurality of products supported by a pallet, the blast freezer comprising:

a source of freezing air,

an air flow chamber including an air flow handler and an array of side air openings for facilitating a flow of freezing air between the air flow chamber and said freezing air source; and

a pallet rack for positioning the array of pallet assemblies relative to the array of side air flow openings for channeling the flow of freezing air between the air flow chamber and the freezing air source through the array of pallet assemblies, wherein the pallet rack has a depth corresponding to the thickness of a single pallet assembly to facilitate freezing of the products supported by the pallet assemblies.

2. The blast freezer of claim **1**, wherein the pallet assemblies include air flow passages for facilitating the flow of freezing air through the pallet assemblies.

3. The blast freezer of claim **2**, wherein each air flow passage is defined by a spacer between at least two products.

4. The blast freezer of claim **1**, further comprising:

an air flow barriers interactive with the pallet assemblies for inhibiting the flow of freezing air around a perimeter of each of the pallet assemblies into the air flow chamber as freezing air flows between the air flow chamber and said freezing air source through the pallet assemblies.

5. The blast freezer of claim **4**, wherein the air flow barrier is selected from a group consisting of at least one pallet seal encircling a perimeters of the air openings and at least one pallet flap adjacent the perimeters of the pallet assemblies.

6. The blast freezer of clam **4**,

wherein the air flow barrier includes at least one pallet seal encircling the perimeters of each of the air openings; and

wherein the pallet rack is for positioning a side of each of the pallet assemblies against the at least one pallet seal.

7. The blast freezer of claim **6**, wherein each of the at least one pallet seals has an upper portion that is vertically adjustable to allow for different height pallet assemblies to be used yet still have sealing along the side of a pallet assembly near its top.

8. The blast freezer of claim **6**, wherein the pallet rack includes pallet guides for guiding the pallet assemblies against their corresponding pallet seals when placed in position.

9. The blast air freezer of claim **1**, wherein the air flow handler pulls freezing air through the pallet assemblies into the air flow chamber.

10. The blast air freezer of claim **1** wherein the blast freezer is positioned within a freezer storage warehouse and the source of freezing air used for blast freezing is the same as is used for storage, but with the blast freezer forcing higher air flow rates through the pallets being frozen compared to the flow rates supplied to the stored, already frozen pallets.

11. The blast air freezer of claim **10** in which the source of freezing air is between 10 degrees and −20 degrees Fahrenheit.

12. The blast air freezer of claim **11** in which the source of freezing air is at about −10 degrees Fahrenheit.

13. The blast freezer of claim **1** wherein the side openings in the plenum that are adjacent pallet assemblies have vertically adjustable panels at the top of the openings to accommodate different height palletized products.

14. The blast freezer of claim **13** in which said panels are rigid.

15. The blast freezer of claim **14** additionally comprising locating pins between the panels and racks to allow for ready adjustment of the vertical position of said vertically adjustable panels.

16. The blast freezer of claim **15** in which the rack has a series of vertically arranged holes for pin engagement at different heights to permit ready adjustment of panel height.

17. The blast freezer of claim **1** in which said rack is sized to allow for an array of at least three pallet assemblies high and at least six pallet assemblies wide, while maintaining a depth of only one pallet assembly.

18. The blast freezer of claim **17** in which said rack is sized to allow for an array of at least four pallet assemblies high and at least eight pallet assemblies wide, while maintaining a depth of only one pallet assembly.

19. The blast freezer of claim **18** in which said rack is sized to allow for an array of five pallet assemblies high and at least ten pallet assemblies wide, while maintaining a depth of only one pallet assembly.

20. The blast freezer of claim **1** in which said rack is sized to allow for an array of five pallet assemblies high and at least ten pallet assemblies wide, while maintaining a depth of only one pallet assembly.

21. The blast freezer of claim **1** in which the an air flow handler has the capacity to provide for an air flow rater of freezing air through the palletized products at greater than 50 feet per minute.

22. The blast freezer of claim **1** in which the an air flow handler has the capacity to provide for an air flow rater of

freezing air through the palletized products at greater than 100 feet per minute.

23. The blast freezer of claim **1** in which for each position in said pallet rack for positioning a pallet assembly there is just one corresponding side air opening in said air flow chamber.

24. The blast freezer of claim **1** comprising an air flow barrier interactive with the pallet assemblies for inhibiting the flow of freezing air around a perimeter of each pallet assembly as freezing air flows between the air flow chamber and the freezing air source through the pallet assemblies.

25. The blast freezer of claim **24**, wherein the air flow barrier is selected from a group consisting of at least one pallet seal encircling a perimeter of the air opening and at least one pallet flap adjacent the perimeter of the pallet assembly.

* * * * *