(No Model.) 5 Sheets—Sheet 1.

C. SPIRO.

TYPE WRITING MACHINE.

No. 464,398. Patented Dec. 1, 1891.

Fig. 1

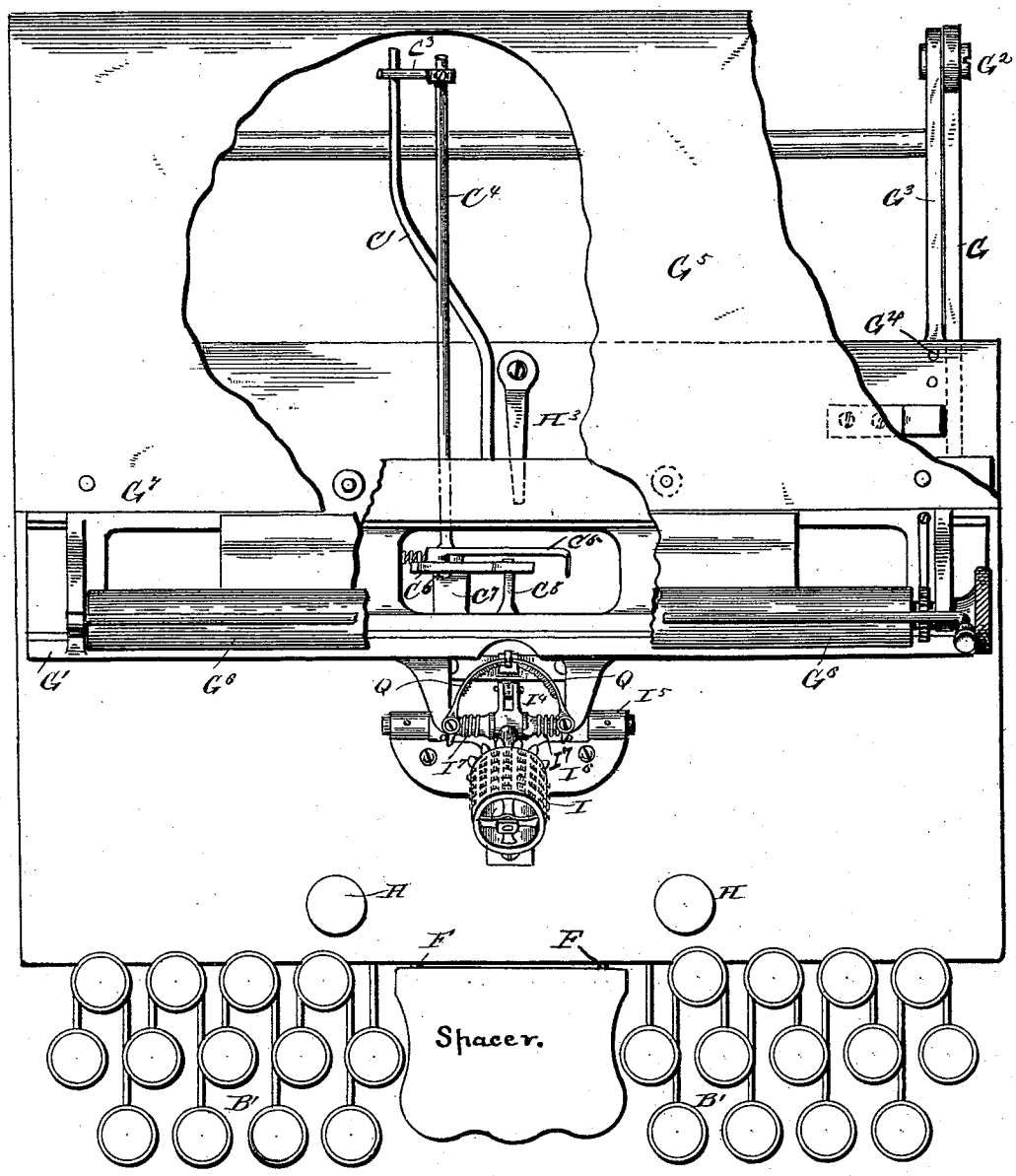

WITNESSES
L. C. Mills
A. S. Rawlings

Charles Spiro
INVENTOR
by E. B. Stocking
Attorney

(No Model.) 5 Sheets—Sheet 2.

C. SPIRO.

TYPE WRITING MACHINE.

No. 464,398. Patented Dec. 1, 1891.

Fig. 12.

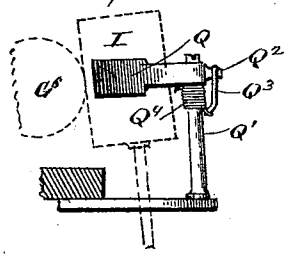

Fig. 2.

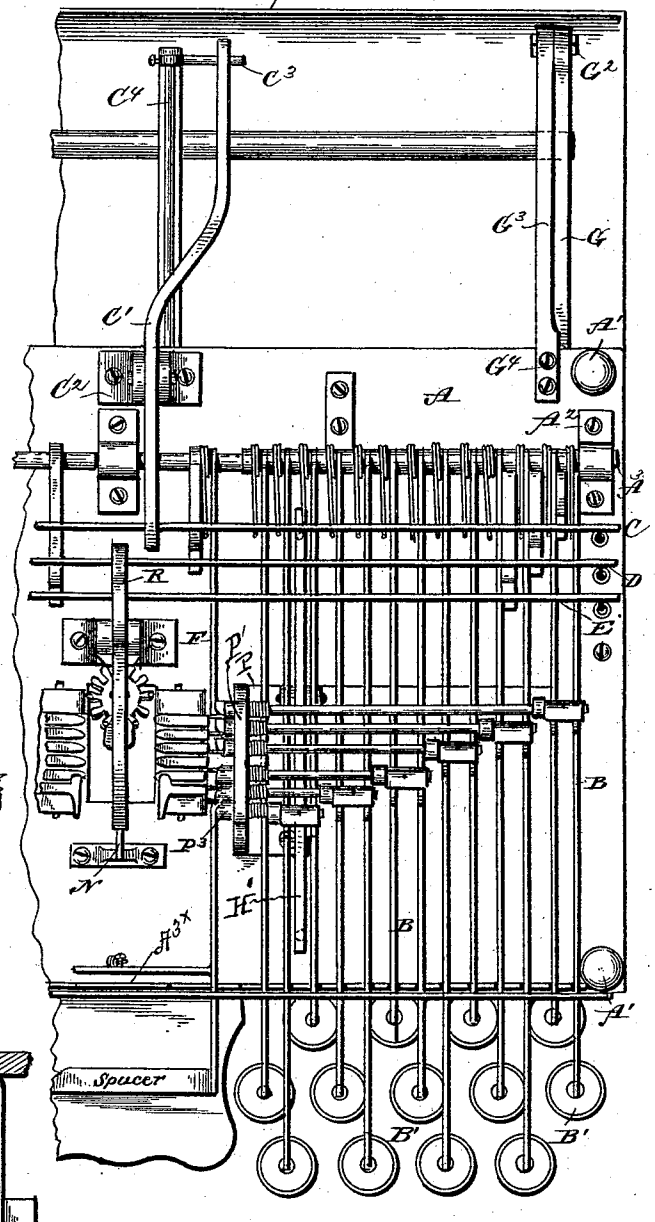

Fig. 13.

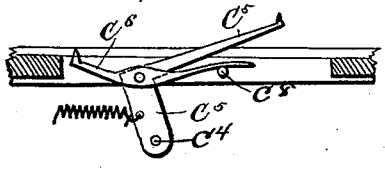

Fig. 14.

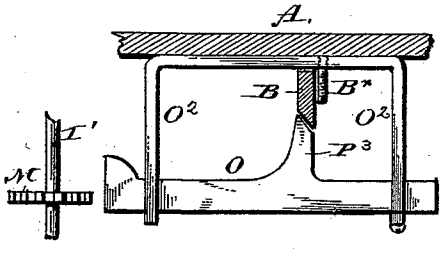

WITNESSES

L. C. Wills.

A. E. Rawlings

Charles Spiro

INVENTOR

by E. B. Stocking

Attorney

(No Model.) 5 Sheets—Sheet 3.

C. SPIRO.

TYPE WRITING MACHINE.

No. 464,398. Patented Dec. 1, 1891.

Fig. 3.

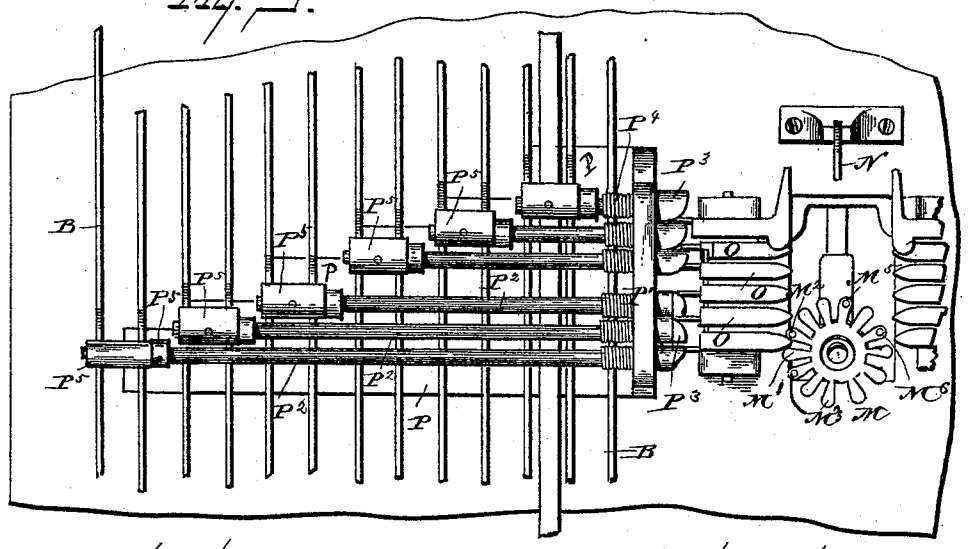

Fig. 6.

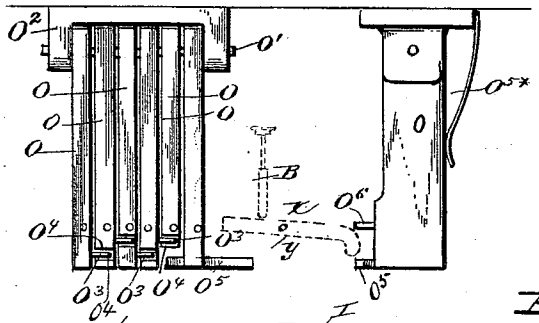

Fig. 4.

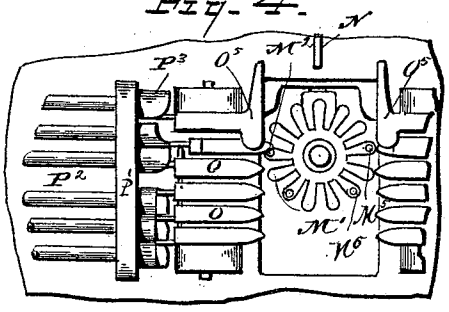

Fig. 7

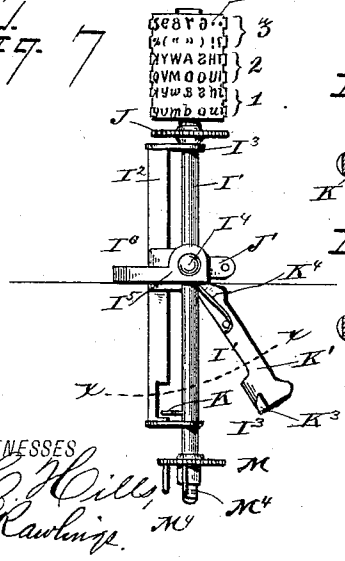

Fig. 8.

Fig. 9.

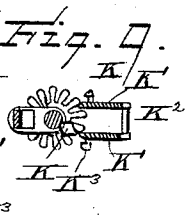

Fig. 5.

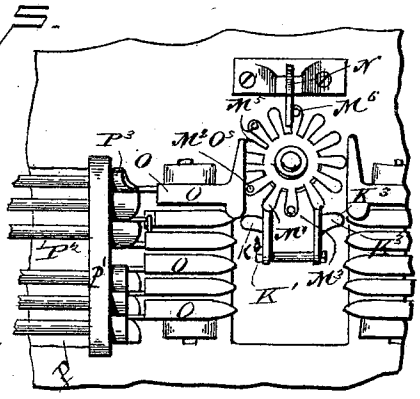

WITNESSES

L. C. Hills

A. A. Rawlings

Charles Spiro
INVENTOR

by E. B. Stocking
Attorney

(No Model.) 5 Sheets—Sheet 4.

C. SPIRO.

TYPE WRITING MACHINE.

No. 464,398. Patented Dec. 1, 1891.

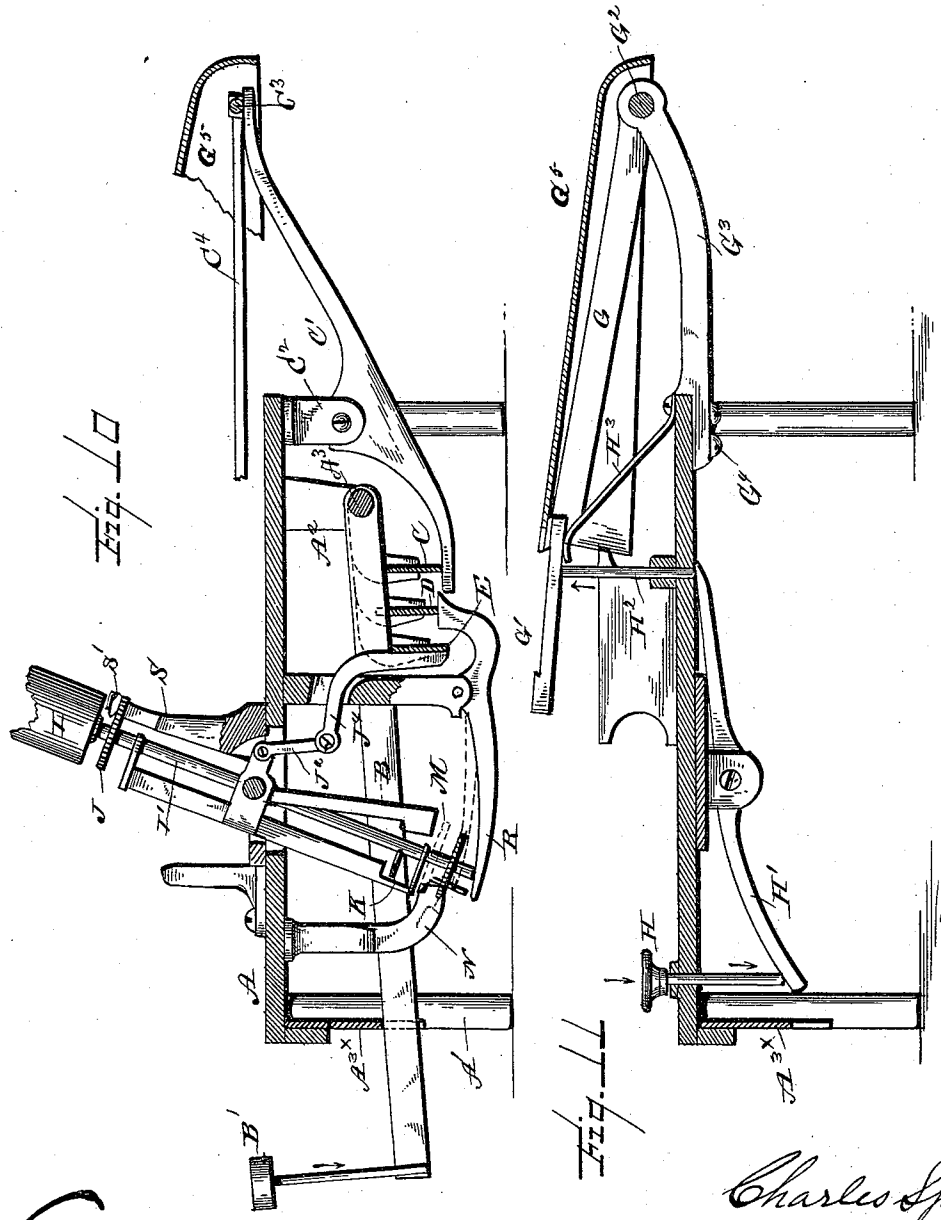

Fig. 10

Fig. 11

WITNESSES

L. C. Mills,

A. C. Rawlings

Charles Spiro

INVENTOR

by E. B. Stocking

Attorney

(No Model.) 5 Sheets—Sheet 5.

C. SPIRO.

TYPE WRITING MACHINE.

No. 464,398. Patented Dec. 1, 1891.

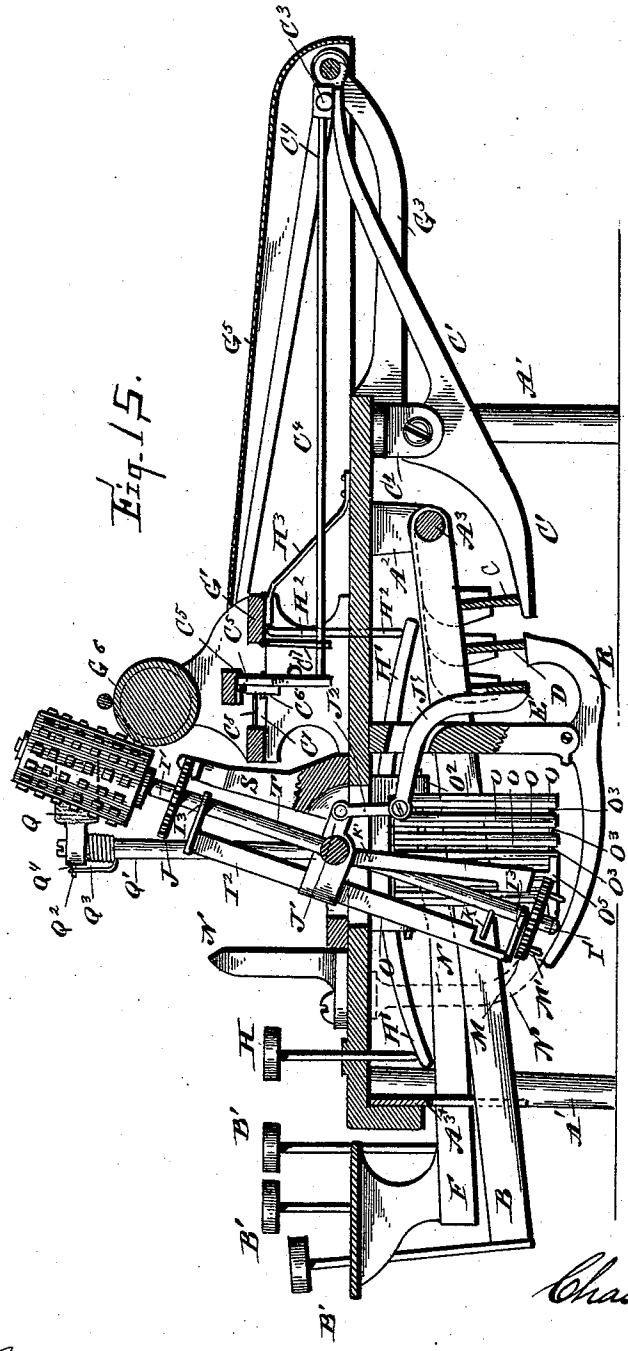

Fig. 15.

Witnesses

S. C. Hills,

W. L. Duvall.

Chas. Spiro

Inventor

By E. B. Stocking

Atty.

UNITED STATES PATENT OFFICE.

CHARLES SPIRO, OF NEW YORK, N. Y.

TYPE-WRITING MACHINE.

SPECIFICATION forming part of Letters Patent No. 464,398, dated December 1, 1891.

Application filed October 27, 1886. Serial No. 217,322. (No model.)

To all whom it may concern:

Be it known that I, CHARLES SPIRO, a citizen of the United States, residing at New York, in the county of New York, State of New York, have invented certain new and useful Improvements in Type-Writing Machines, of which the following is a specification, reference being had therein to the accompanying drawings.

This invention has relation to type-writers, and more especially to that class in which the type are mounted or formed on the periphery of a cylinder, wheel, or segment, which is rotated, elevated, and depressed to bring desired characters to the printing-field.

Among the objects of this invention is to provide mechanism connecting a system of key-levers with the type-cylinder or its equivalent, so that by depressing any lever of the system the proper character is brought to the printing-point.

Another object of the invention is to reduce to a minimum or to overcome altogether the momentum of the rotating cylinder during the selection of a character.

Other objects and advantages of the invention will appear in the following description, and the novel features thereof will be particularly pointed out in the claims.

Referring to the drawings, Figure 1 is a plan, with parts broken away, of a type-writing machine constructed in accordance with my invention. Fig. 2 is a half bottom plan, the opposite half (not shown) being a mere duplication of that illustration. Fig. 3 is a bottom plan, upon an enlarged scale, of the cylinder-rotating and character selecting devices. Figs. 4 and 5 are similar views hereinafter more particularly described. Fig. 6 is a front and a side elevation of the principal elements of a novel rack which I have devised. Fig. 7 is a side elevation of the type-cylinder and its supporting devices. Figs. 8 and 9 are horizontal sectional views taken about on the line *x x* of Fig. 7. Figs. 10 and 11 are vertical sections showing the principal elements employed in the machine for giving the oscillatory and reciprocatory movements of the printing-cylinder and for elevating and depressing the paper-carriage, respectively. Fig. 12 is a detail illustrating the operation of the inking-pads. Fig. 13 is a side elevation of the feeding and check pawls. Fig. 14 is a modified rack-bar with sliding teeth directly connected with the key-levers. Fig. 15 is substantially a central vertical section of the entire machine.

Like letters indicate like parts in all the figures of the drawings.

A suitable base or bed plate A, supported by legs A′, serves to support in an operative manner the various devices constituting the machine. At or near the rear edge and depending from the plate are brackets A^2, which support the rod A^3, upon which the key-levers B are pivoted, these levers extending to and beyond the front edge of the bed and passing under a spacing-strip A^{3*}, slotted for the reception of the levers, as shown. Each of the levers is provided with a key B′, having a character indicating the type which is brought into operation by a depression thereof, as usual. There are also pivotally supported by the rod A^3 three bails C, D, and E, which pass beneath the entire system of key-levers, and which are properly notched or otherwise varied along their upper edges, so as to be operated upon or not operated by certain key-levers of the system in accordance with the condition whether or not an action of the bail is required to produce the impression of the character indicated by any particular key, as is customary in the construction of this class of machines. The rear bail C is the spacer, the intermediate bail D the lifter, and the front bail E the oscillator. The spacer-bail is operated independently of the key-levers by means of the spacer key or plate shown, which is mounted upon or formed as a part of two levers F, pivoted upon the rod A^3 and passing over the spacer-bail C. Under the latter there projects a pivoted lever C′, supported in a depending bracket C^2 and extended beyond the rear edge of the table a sufficient distance to pass beneath a rock-arm C^3, mounted on a rock-shaft C^4, which is also projected to the rear of the machine, for a purpose hereinafter stated. At its front end the rock-shaft is rigidly connected with the check-pawl C^5, (see Figs. 1, 13, and 15,) which carries pivotally the feed-pawl C^6. A bracket C^7, depending from the carriage-track serves as a bearing for the crank-shaft C^4. A pin or lug C^8, extending

horizontally from the carriage-track and beneath the tail of the feed-pawl C^6, which tail is curved, as shown, Fig. 13, serves to throw said feed-pawl out of connection with the rack formed on the paper-carriage after the check-pawl has been moved by the rock-shaft a distance in accordance with the depression of the lever C′ by the bail C through the instrumentality of any key-lever.

The details of construction and mode of operation of the feeding mechanism herein shown are substantially that shown in previous patents granted me, and no further description thereof is deemed necessary.

G represents one of a pair of arms attached to the carriage-track G′ and extended to the rear of the machine and pivoted, as at G^2, to similar arms G^3, secured, as at G^4, to the base A. This construction is duplicated at each end of the track, so that it and the carriage mounted thereon may be elevated or depressed to reach or be in proper position to receive the impression of different printing characters in any vertical line of the printing-cylinder. A plate G^5 (see Fig. 1) is also secured to the track and serves to cover the mechanism just described and as a table for the paper extending from the roll G^6 of the paper-carriage G^7. The object of extending the lever C′ and rock-shaft C^4 back is to bring their point of engagement with each other in line with the two opposite pivots G^2 of the track-supporting arms G G^3, in order to permit of the elevation and depression of the track. It is apparent that other mechanism for vertically raising and depressing the carriage, and which would occupy less space than that herein shown, can be employed.

Suitable keys H are mounted in the base A and depend below the same, so as to come into contact with levers H′, (see Fig. 11,) pivoted to the under surface of the bed, and beyond their pivots carrying lifting-pins H^2, mounted in the bed and projecting against the under surface of the paper-carriage track B′. A spring H^3 is secured to the upper surface of the bed and impinges against the under surface of the track, so as to merely counterbalance the weight of the carriage and track, in order to reduce the power required to lift said carriage. In this case in the arrangement in circumferential lines and in three fields of the printing characters on the cylinder (the fields being respectively for upper case, lower case, numerals, and punctuations) two keys will serve to present either field to the printing-point, as the normal position of the carriage would be in one field, preferably the lower case, while one of the keys H and its lever would be adapted to bring the carriage to one of the remaining fields and the other to the other. The reciprocation of the printing-cylinder from one line to the other of a field is accomplished by a different mechanism, which will be hereinafter described.

I represents the type-cylinder, and has arranged upon its periphery in parallel circumferential lines the printing characters employed, the lower-case letters occupying the lower field, the capital letters the middle field, and the numbers and punctuation-marks the upper field. Each row of letters in each field consists of thirteen characters, so that each field has twenty-six characters, and the entire cylinder seventy-eight. The cylinder I is rigidly and it may be removably mounted upon the shaft I′, so that cylinders provided with different styles of type may be substituted for each other. The shaft has its bearings in the bar I^2 and at the ends thereof, as at I^3, (see Fig. 7,) and also passes through a cross-bar or trunnion-piece I^4, which is mounted in bearings I^5, formed in the bracket I^6, secured upon the base. A coiled spring I^7 (see Fig. 1) is mounted upon the trunnion-piece, so as to throw the cylinder to the front and away from the platen or paper-roll G^6 of the machine. Upon the shaft and immediately beneath the cylinder is a locking-wheel or pinion J, and from the trunnion-piece there projects a rock-arm J′, slotted and perforated for the connection of a link J^2, which at its opposite end is pivotally connected to an arm J^4, extending from the bail E.

Just above the lower bearing of the shaft I′ there is projecting therefrom a lug K, the outer end of which is pointed or cam-shaped, (see Fig. 8,) and the type-cylinder is arranged upon the shaft with relation to the said lug, so that when not otherwise influenced and when the printing-cylinder, as shown in Fig. 1, is at the limit of its stroke backward from the platen (caused by the coiled spring I^7, Fig. 1, as heretofore stated) the lug points in a direction away from the line of characters, which are directly opposite the printing-point of the platen. The position of the parts mentioned, as above described, may be termed the "normal" position of the cylinder, its shaft, and the lug thereon.

I have provided a device, which I designate a "normal returning frame or arms," for always bringing the cylinder to the normal position after each impression made thereby, which device co-operates with the lug K for this purpose, and yet is constructed and operated to permit a full half-revolution in either direction of the cylinder and the shaft.

While the device which I employ for returning the cylinder to its normal position is in operation it serves to lock the cylinder against rotation during that portion of its movement toward and from the platen when other devices, hereinafter described, are not serving that function. In other words, it will hereinafter appear that the cylinder is locked, in a certain sense, against undesired movements, either rotary or reciprocatory, during the entire operations of selecting a character, giving its impression, and returning it to the normal position.

The frame alluded to consists of a pair of arms K′, united, if desired, by a tie-bar K^2,

(see Figs. 7, 8, and 9,) and having lugs K^3 projecting laterally from the outer surface of each arm, for a purpose hereinafter described. This frame, or these arms K′ are pivoted upon the trunnion-piece I^4, and a spring K^4 serves to draw the lower free end of these arms toward and at the sides of the shaft I′, so as to strike the lug K, as shown in Fig. 9, at one side or the other and cause it and the shaft and cylinder to rotate in one direction or the other, so as to be included within the arms, as shown in Fig. 8, and thus to positively bring the printing-cylinder to its normal position after it leaves a rack for rotating the same, as hereinafter described.

Below the bearing I^3 there is rigidly mounted upon the shaft a pinion M, the function of which is to assist in selecting printing characters by rotating the cylinder. This pinion has thirteen teeth—a tooth for each character in each row of each printing-field of the cylinder. I designate the tooth M′ (see Figs. 3, 4, and 5) and its substantially opposite tooth the "quarter-teeth" of the pinion, for the reason that when the cylinder is in its normal position these teeth are a quarter of the circumference of the pinion M from the teeth, or rather the space between the teeth which is occupied by the rear locking-lug N when the cylinder is giving the impression of any one of the characters, which are directly opposite the printing-point of the platen when said cylinder is in its normal position. These characters would be brought without rotating the cylinder to the printing-point by simply oscillating the cylinder upon the trunnions. As the printing characters are not only arranged in circumferential lines, but also in substantially vertical columns upon the periphery of the cylinder, it will be seen that by turning the cylinder a half-rotation in both directions all the characters in a circumferential line may each be brought to the printing-point. I utilize the movement of the lower end of the shaft I′, which takes place in the act of throwing the cylinder against the platen to rotate the cylinder by projecting into the path of the pinion M an obstruction or a series of obstructions which I select automatically and at will with the object and purpose of producing a greater or less rotation of the cylinder. The devices which I employ for the purpose just stated constitute as a whole a rack-bar, each of the teeth of which is movable independently of every other, and all of the teeth of which are capable of being moved in unison with each other, and, furthermore, for compactness I may arrange one, as shown, or it may be more than one of the teeth of my rack-bar to overlap or extend beyond a companion tooth or companion teeth of the bar. I provide a tooth M^2 in advance of the quarter-tooth of the pinion M and a tooth M^3 next in rear of said quarter-tooth, with depending pins M^4, which serve in effect to deepen the faces of the tooth in order that it shall have contact with the rack-bar at all portions of the curvilinear path of the pinion as a whole and adjacent to the rack-bar. Other pins M^5 M^6 are provided for purposes hereinafter described. Each tooth O of my rack-bar is pivoted independent of the others upon a rod O′, (see Fig. 6,) mounted in a bracket O^2, depending from the bed, and each tooth, excepting the last in the series, has a lateral pin O^3 projecting into a groove O^4, formed in the edge of the next adjacent tooth. At the back of each tooth I arrange a spring O^5, which has a tendency to keep the teeth in line with each other. In order to make my rack-bar as compact as possible and to provide for the turning of the pinion one tooth only from the quarter-tooth, and therefore the cylinder one vertical line of characters only from the normal line, I form upon the end of the last tooth an extension O^5, which projects laterally in both directions and extends below the next preceding tooth of the system, which is shorter than the others, to give space for said lateral projection. My rack-bar as a whole is arranged at the side of the path of the pinion M, and, in fact, I provide duplicate rack-bars, one upon each side of said path, and connect each pair with the key-levers of the machine, as will shortly appear. Now, for example, suppose that a letter is required to be printed which is diametrically opposite the normal line of letters of the cylinder. Then it is apparent that (provided there are six teeth in my rack-bar) I must throw all the teeth into the path of the pinion, when the same and the type-cylinder will be given a half-rotation and the desired letter will be brought to the printing-point. The first tooth O of the rack intercepts the quarter-tooth of the pinion, and as the latter moves through its path it is apparent that it and the cylinder are locked completely against any undesired movements thereof; and, furthermore, and what is of great importance, momentum is directly neutralized by the positive connection of the pinion and the rack, so that in giving my cylinder its utmost rotation—that is, in rotating it to select the most distant, so to speak, printing character thereon—I may make its movement as rapid as possible, and yet by these devices no ill effects whatever can occur from any momentum given to the operative parts.

In Fig. 4 I have illustrated the selection of a character in a vertical line second from the normal characters of the cylinder, in which case the pin M^2 impinges against the next to the last tooth O, which is thrown out by the selecting devices hereinafter described, so that just sufficient rotation is given to the pinion, the shaft, and cylinder to bring the desired character to the printing-point.

In Fig. 5 I represent the parts in position to bring a character next to the normal line of characters on the printing-cylinder to the printing-point. In this instance only the last tooth O and its projections O^5 are thrown out when the pin M^5, coming into contact

therewith, turns the pinion one tooth and brings the pin M^5 also against the projection O^5 of the tooth and the pin M^6 against the rear locking-bracket N. Of course it is understood that by projecting teeth from the opposite rack into the path of the pinion it and the cylinder will be rotated in the opposite direction, so that the remaining characters thereon may be brought to the printing-point.

It now remains to give in detail the devices for determining which and how many of the teeth of the rack shall be projected into the path of the pinion. As the keys are each adapted to produce a given letter, the motion produced in the key-levers in depressing the keys may be utilized in various ways for the purpose of controlling the teeth of the rack-bar. I have illustrated two ways for accomplishing this purpose.

Beneath the key-levers and depending from the base of the machine is a plate P, or it may be any form of bracket having bearings P′ for rock-shafts P^2, upon the ends of which are arranged a series of cams P^3. Coiled springs P^4, Fig. 3, are arranged in a well-known manner about the shafts to give them partial rotation in one direction. On each shaft there is arranged a cam P^5, which is of sufficient width to be operated by two adjacent key-levers. The first cam in the left of Fig. 3 is shown as depressed or turned down by the key-lever B, and this action of the cam P^5 rotates the shaft and the cam P^3, so that one of the pins O^6 projecting from the edge of the teeth is struck by said cam P^3, and thereby the tooth is thrown into the path of the pinion. In the instance described and as illustrated the lateral pins O^3 of the first and succeeding teeth serve to move said succeeding teeth also into the path of the pinion, while it will readily be seen that if the second tooth of the rack-bar were being operated upon by the second cam P^3 only said second and its succeeding teeth of the rack-bar would be thrown out. In Fig. 4 the fifth cam P^3 of the series is operating against the fifth tooth of the rack, while in Fig. 5 the sixth and last cam and tooth are co-operating. Spring I^7, Fig. 1, retains the shaft I′ and its pinion M to its normal position, and as the pinion traverses the teeth of the rack the type-cylinder and shaft are rotated until lug K is brought to a point where the lug will be controlled by the frame or arms K′.

At this point I deem it proper to mention the action of the returning frame or arms K′. It will be seen in Fig. 5 that the lug K^3 of one of the said arms abuts against the projection O^5 of the last tooth, whereby said frame (or arms) is held back, while the lower end of the type-cylinder shaft completes its advance movement, during which completion of said movement only the cylinder and shaft are rotated to bring the desired letter to the printing-point. The same operation takes place with the frame or arms K′ when one or more of the teeth of the rack-bar are thrown into the path of the pinion, so that always, whatever be the number of the teeth projected, when the shaft or pinion in its return movement ceases to be controlled by the teeth it enters completely under and into the control of the frame or arms by means of the lug K, and thus is completely locked against any disadvantageous operation or any momentum accumulated by the cylinder, shaft, and pinion. Other devices than those herein described for operating the independently-movable teeth of my rack-bar may be substituted. I show in dotted lines in Fig. 6 a key and key-lever B and an interposed pivoted lever X, having a cam-shaped end, which by a depression of the key-lever is brought into contact with the pin O^6 of the tooth, so that by this simple device the movement of the key-lever may be utilized to operate each or all of the teeth of the rack-bar, and even if said lever be pivoted, as at *y*, so as to act as a multiplying device it cannot destroy or affect the locking function of my movable toothed rack-bar upon the pinion during its movement and that of the cylinder.

Fig. 12 represents in side elevation the inking-pads Q, which are supported in front of the platen and in the path of the printing-cylinder upon standards Q′, each pad being pivoted thereon and having a projecting lug Q^2, which strikes against an arm Q^3, in order to determine the closed position of the two pads, as shown in Fig. 1. A coiled spring Q^4 causes the pads to yieldingly embrace the cylinder and yet to open to allow the same to pass against the pads, as shown by dotted lines, thus aiding in overcoming any undue momentum in the cylinder. In this manner ink is applied to the printing characters upon the cylinder.

The devices employed to elevate the cylinder to present characters in an upper line of a field consist of a pivoted lever R, (see Fig. 10,) which projects to the front and under the lower end of the shaft I′. It projects to the rear under the intermediate bail D, which is notched, slotted, or otherwise adapted to be or not to be acted upon by the key-levers B above it. In the figure referred to the bail is slotted, so that it is not depressed, nor is the lever R thrown into the path and upwardly against the shaft; but whenever a key-lever is depressed and the bail is not slotted it (the bail) is depressed, and also the lever R elevated, so as to form a curved track, (see dotted lines,) upon which the lower end of the shaft rides as it oscillates from rear to front, and in this manner the shaft and the cylinder are raised.

S represents the forward locking-bracket, which enters spaces between the teeth of the locking-pinion J and has a V-shaped lug S′, so that the locking operation may take place either beneath said lug, as shown, or above it when the cylinder is raised, as described. Now it will be noticed that the cylinder is locked by the upper pinion J and locking-

bracket S, and at the same time it is locked by the lower locking-bracket N and the pinion M, and also by the connection of said latter pinion with a tooth or teeth of the rack-bar, so that when taking the safety or normal returning frames or arms K′ into consideration there is not an instant of time during any of the movements of the cylinder, and even during its return to a rest, when it is not substantially and completely locked.

The importance of providing a complete system of lockage, as well as the importance of providing in such a system a construction which shall destroy the effect of momentum, can be readily demonstrated in assuming it necessary to print the most widely-separated characters of the printing device, and it is in this particular feature that any defects in existing machines of the class which employ wheels, cylinders, or segments to print from seem to lie, and I have overcome the same by the construction herein described.

In Fig. 14 I show the tooth O arranged to slide in a bracket O^2 and provided with a cam P^3, directly against which the key-lever B operates to throw the tooth into mesh with the pinion M. A screw or pin $B^\times$ prevents lateral displacement of the lever when it is depressed to bring its lower beveled edge against the parallel upper edge of the cam P^3 for the purpose of throwing the tooth into mesh with the pinion. Any suitable spring may be employed to return the tooth to its normal position.

Having described my invention and its operation, what I claim is—

1. In a type-writing machine of the class described, a printing-cylinder mounted to rotate about its axis and to oscillate on an axis at right angles thereto, a pinion mounted upon said shaft, and a rack-bar constructed to be thrown into the path of said pinion, substantially as specified.

2. In a type-writing machine of the class described, a type-cylinder, shaft, and pinion, a rack-bar comprising independently-movable teeth, a system of key-levers, and mechanical devices arranged between the key-levers and the teeth of the rack-bar whereby a depression of the levers shall select a desired number of the teeth of the rack-bar and project the same into the path of the pinion, substantially as specified.

3. In a type-writing machine of the class described, a rotative printing device mounted for oscillation to give impressions of the characters thereon and connected with a pinion arranged below its center of oscillation, a system of key-levers, and a rack-bar having movable teeth also connected with said system of key-levers, whereby a single key-lever of the system when depressed to oscillate the printing device shall also operate to determine the length of rack-bar to the operation of which said pinion shall be subjected for the purpose of rotating the printing device, substantially as specified.

4. In a type-writing machine of the class described, a printing device mounted for oscillation, rotation, and reciprocation, a pinion rigidly connected therewith, a system of key-levers and bails, one of the latter of which is connected with the oscillating mechanism and another arranged above one end of a lever pivoted for movement into and out of the path of the type-device-oscillating mechanism, a rack-bar having teeth movable into the path of the pinion, and devices arranged between the teeth of said rack-bar and said key-levers for moving said teeth, substantially as specified.

5. In a type-writing machine, an oscillating type-carrying device having two or more fields of printing characters, a carriage and its track provided with feeding and check pawls, a rock-shaft extending from the same to the line of the carriage and track-frame pivot, and a lever extending from said line to and beneath a bail operated by the key-levers, whereby motion is conveyed from the key-levers to the feeding devices in whatever position they may be placed to bring the carriage to the printing-point of the printing device, substantially as specified.

6. In a machine of the class described, and in combination with the pinion for rotating the printing device, a rack-bar comprising movable teeth and rack-teeth-moving devices, substantially as specified.

7. In combination with type-wheel and pinion and a rack-bar comprising independently-movable teeth, a series of teeth-selecting devices arranged beneath and operated by the key-levers of the machine, substantially as specified.

8. The combination, with the type-levers, a rack-bar consisting of movable teeth, and with a pinion arranged to mesh therewith secured to the shaft, of a rotatable type-carrying device and a system of levers arranged between the teeth and the type-levers, substantially as specified.

9. A rack-bar consisting of independently-movable teeth, each one of which is provided with a lateral pin projecting so as to come into contact with an adjacent tooth, and a series of devices for giving movement to the separate teeth of the rack-bar, substantially as specified.

10. A rack-bar consisting of a series of independently-movable teeth, one of which is provided with lateral extensions, combined with devices for giving movement to the separate teeth of the rack-bar, substantially as specified.

11. In a rack-bar consisting of a series of independent teeth, a tooth provided with lateral extensions, in combination with a shortened adjacent tooth, substantially as specified.

12. In a type-writing machine of the class described, the combination, with an oscillatory, reciprocatory, and rotatory type-carrying device provided with an upper and lower lock-

ing-pinion, the latter being also for its rotation, of an upper and a lower locking-bracket and a rack, a tooth or teeth of which is constructed to be thrown into the path of the lower pinion, substantially as specified.

13. In combination with an oscillatory and rotatory type-carrying device and with the shaft thereof, a lug projecting from the shaft and a normal returning-frame yieldingly held against the shaft to control its lug, substantially as specified.

14. The combination, with an oscillatory and rotatory type-carrying device and pinion and its shaft provided with a lug, of a normal returning-frame yieldingly connected with the shaft and a movable rack-bar to be projected into the path of the rotating device and of the said frame, substantially as specified.

15. The combination, with the shaft of a type-carrying device, of a lug projecting from the shaft and a frame adapted to embrace the shaft and lug, substantially as specified.

16. The combination of the pivotally-supported track, the carriage supported therein, the base, and a spring arranged between the track and the base for counterbalancing the weight of the track and carriage, substantially as specified.

17. The combination, with an oscillating type-carrying device and its shaft, of a bar provided with bearings for the shaft having a lug and with trunnions, a trunnion-supporting plate, and a spring for oscillating the shaft in one direction, and a normal returning frame or arm mounted on the trunnion and yieldingly retained in contact with the shaft, substantially as specified.

18. The combination, with an oscillatory and rotatory printing device, of a pinion secured to the device below its center of oscillation and provided with projecting pins, and a rack-bar the teeth of which are independently movable, substantially as specified.

19. The combination, with a printing device of the character described, of a pinion provided with projecting pins and a rack-bar having independently-movable teeth, one of which is provided with lateral projections, substantially as specified.

20. The combination, with the rotating pinion of a printing device of the character described, of a pinion-operating rack having independently-movable teeth arranged in different vertical planes, that in the upper plane being provided with lateral extensions, substantially as specified.

21. The combination, with a printing device having a shaft provided with a lug, of an upper forward locking-bracket, a rear lower locking-bracket, a rack-bar, and a frame, substantially as specified.

22. The combination, with the shaft of an oscillating printing device, of a pointed or cam lug projecting from the shaft and a returning-frame, the free end of which is yieldingly forced to embrace the shaft and its lug, substantially as specified.

In testimony whereof I affix my signature in presence of two witnesses

CHARLES SPIRO.

Witnesses:
JULIUS E. LEVY.
C. H. STEINMAN.