US 20060060434A1

(19) **United States**

(12) **Patent Application Publication** (10) **Pub. No.: US 2006/0060434 A1**

Bieker (43) **Pub. Date: Mar. 23, 2006**

(54) **MAGNETIC RAIL BRAKE**

(76) Inventor: **Guido Bieker**, Kirchhundem (GB)

Correspondence Address:
HOWREY LLP
C/O IP DOCKETING DEPARTMENT
2941 FAIRVIEW PARK DR., SUITE 200
FALLS CHURCH, VA 22042 (US)

(21) Appl. No.: **10/530,320**

(22) PCT Filed: **Oct. 3, 2003**

(86) PCT No.: **PCT/EP03/10990**

(30) **Foreign Application Priority Data**

Oct. 7, 2002 (GB) 0223196.7

Publication Classification

(51) **Int. Cl.**
B61H 13/00 (2006.01)

(52) **U.S. Cl.** **188/164**; 188/33

(57) **ABSTRACT**

A magnetic rail brake for a rail vehicle is disclosed of the type comprising a magnet (**5**) supported from the rail vehicle a small distance above the rail (**4**). The magnet is supported by springs which are overridden on actuation of the magnet. A guide assembly guides the magnet for movement in a substantially vertical plane while allowing limited lateral movement. The magnet is provided with an extension arm (**20**) arranged to contact the rail vehicle at a distance from the magnet which is substantially greater than either the maximum extent of vertical movement or the maximum extent of lateral movement. By controlling the motion of the extension arm within these limits of lateral and vertical motion, unwanted and excessive tilting of the magnet can be avoided.

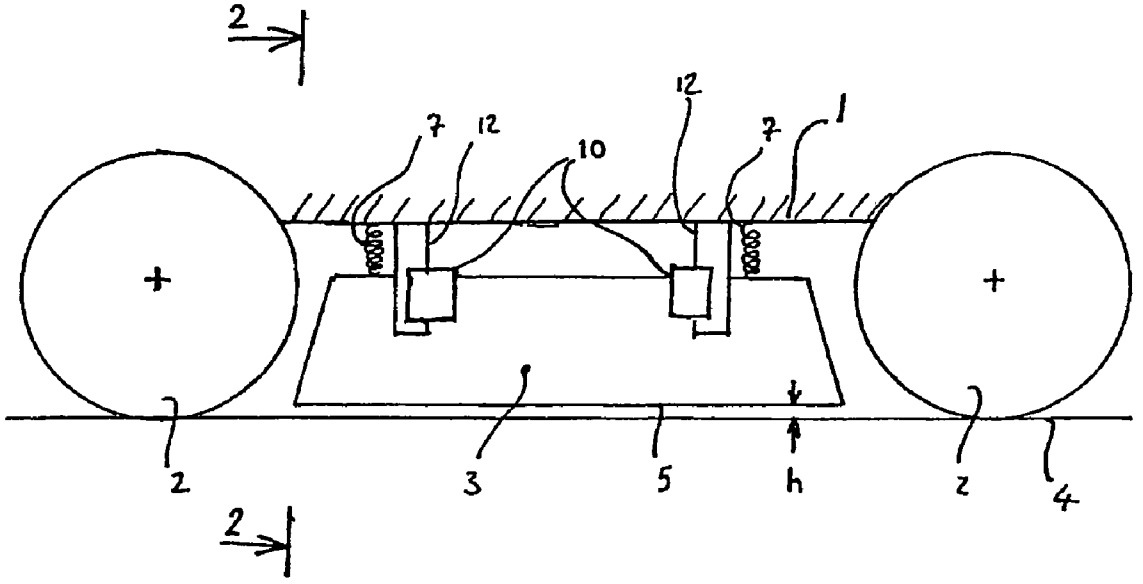

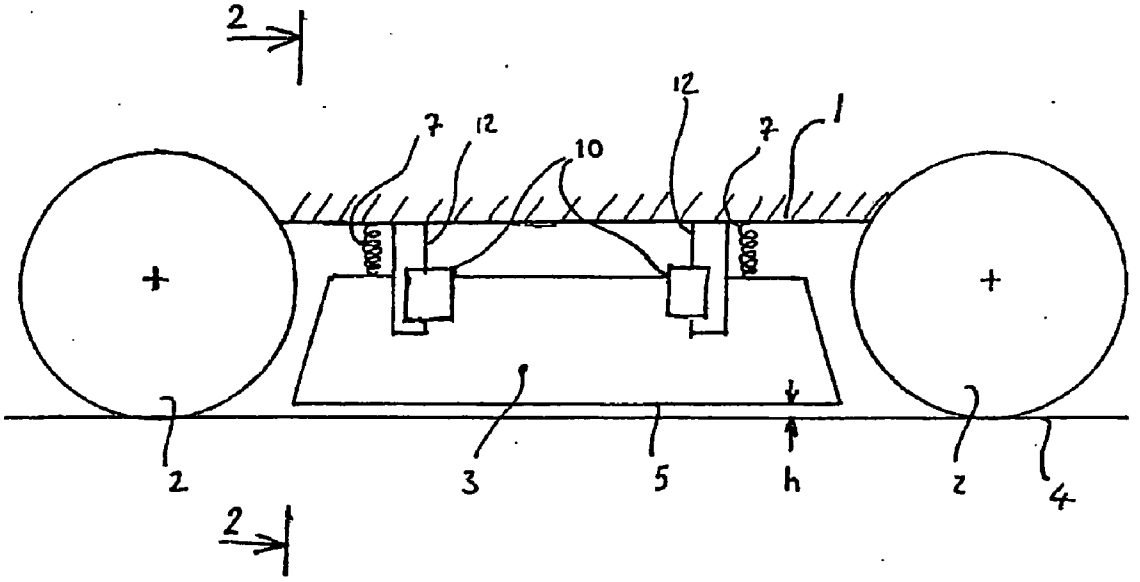

Fig 1

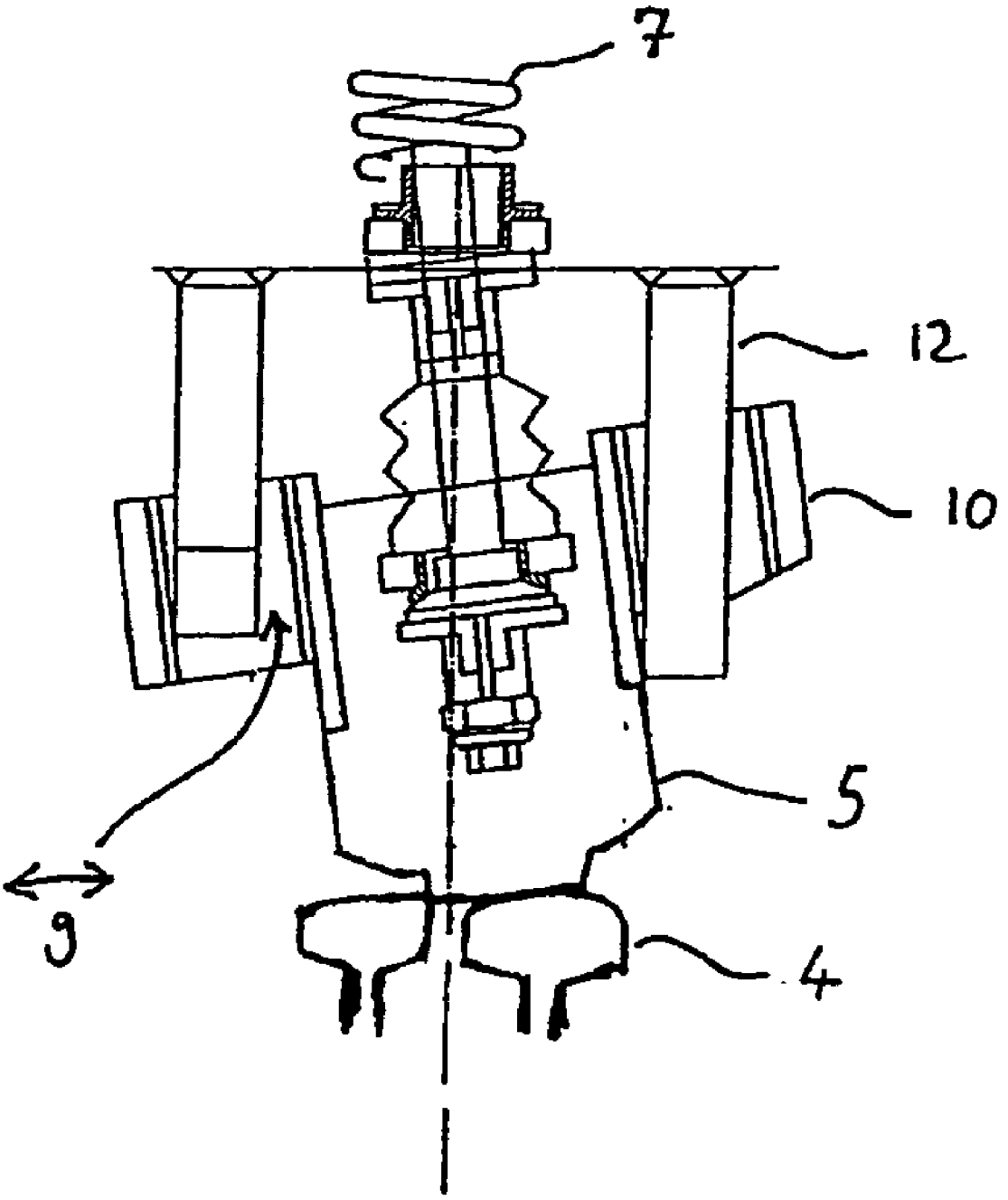

Fig 2

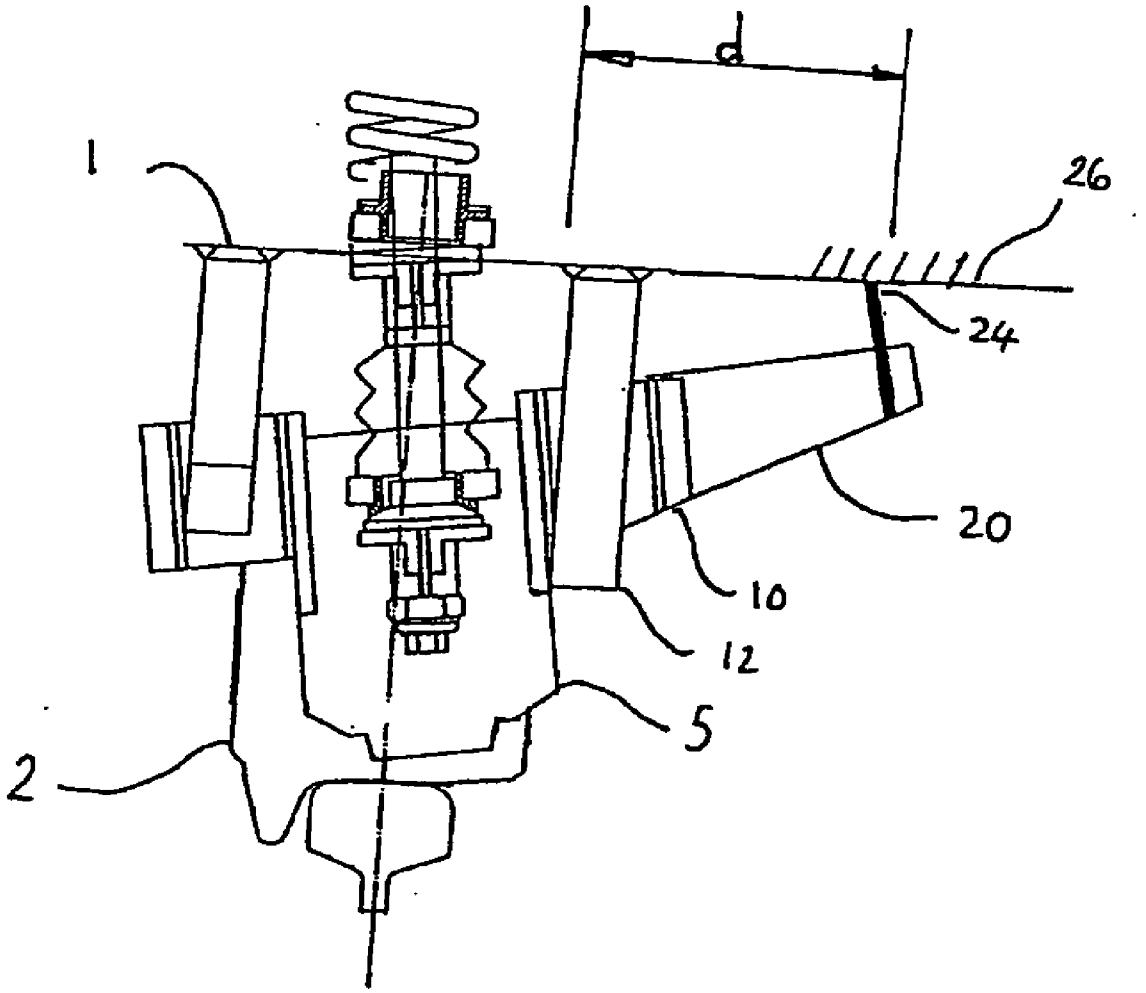

Fig 3.

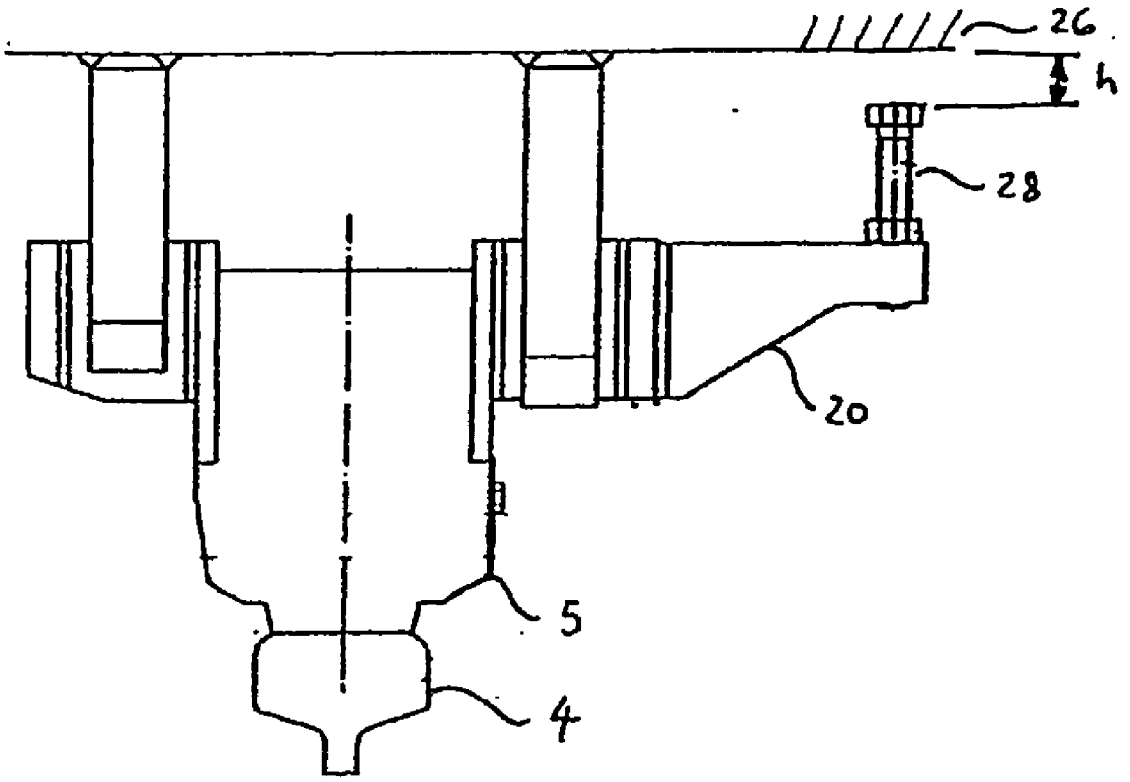

Fig 4

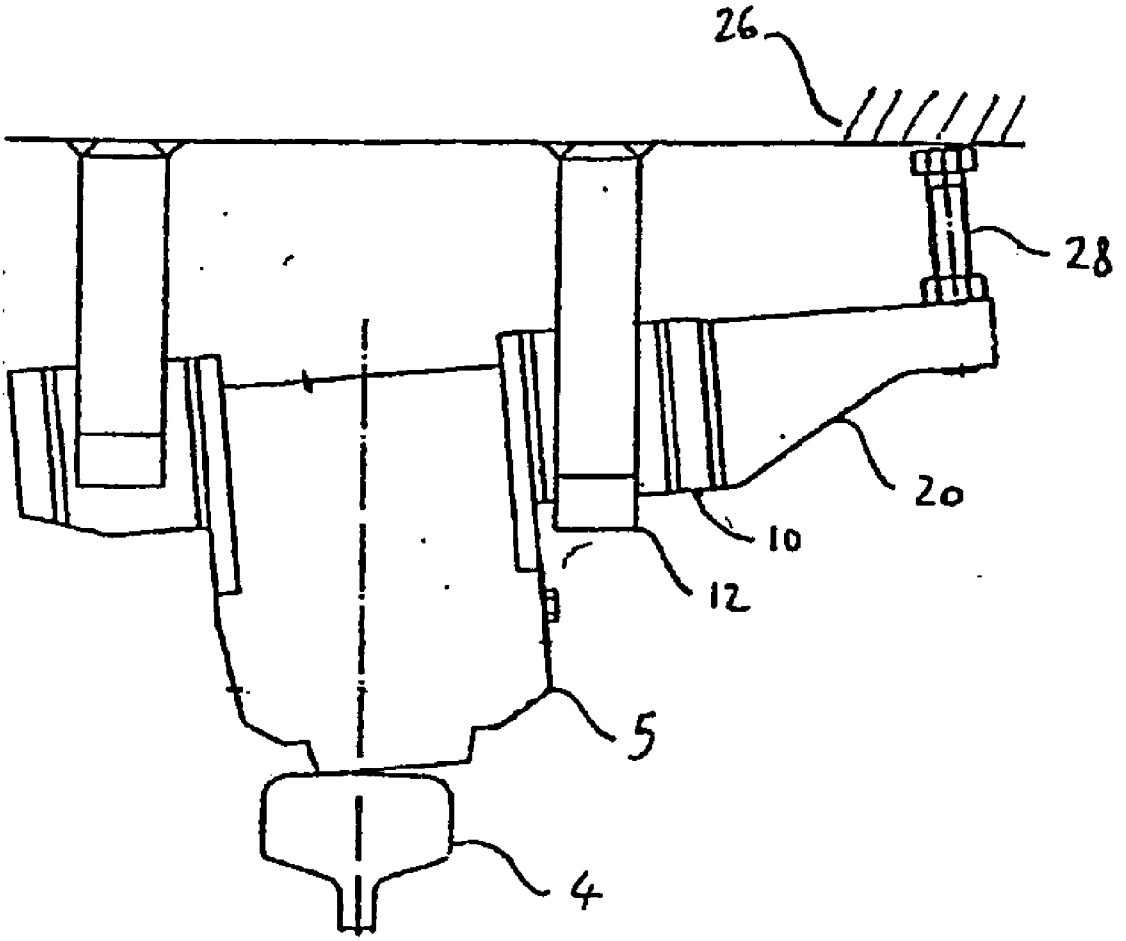

Fig 5

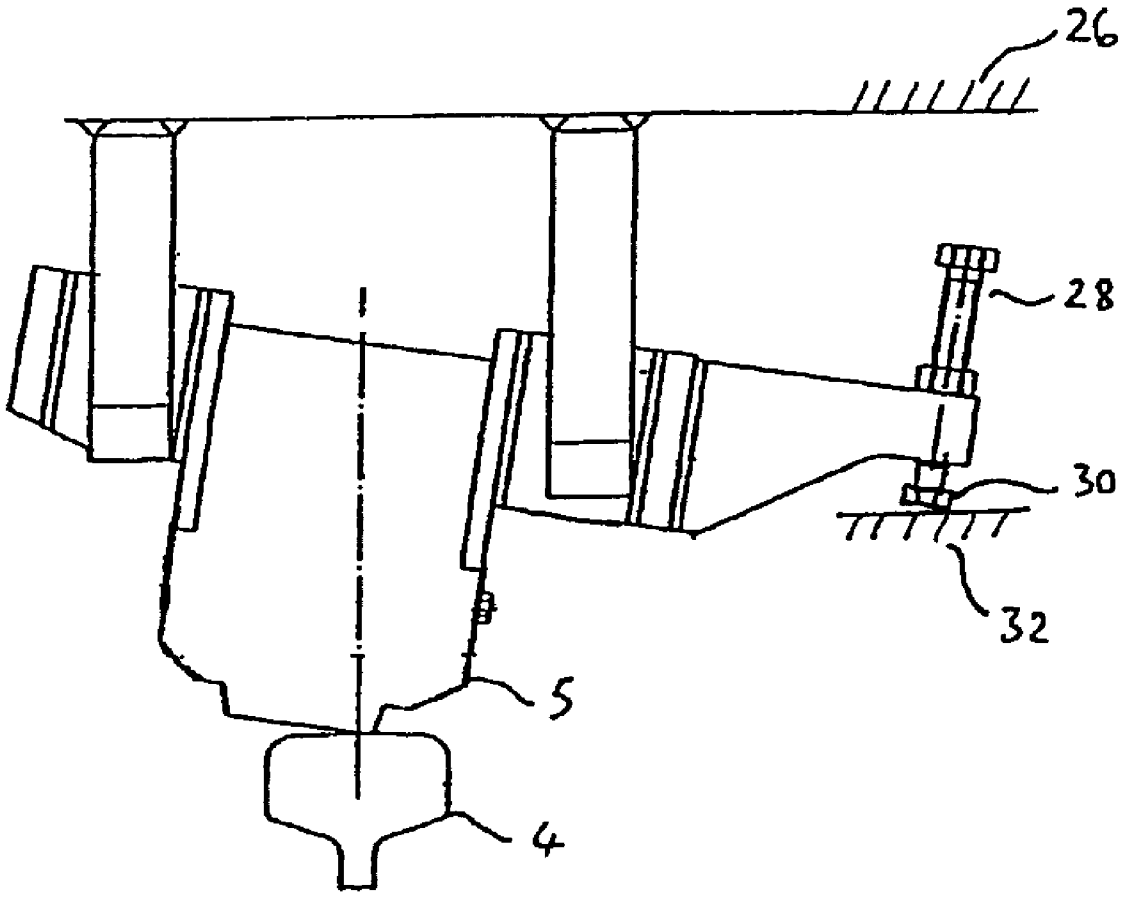

Fig 6

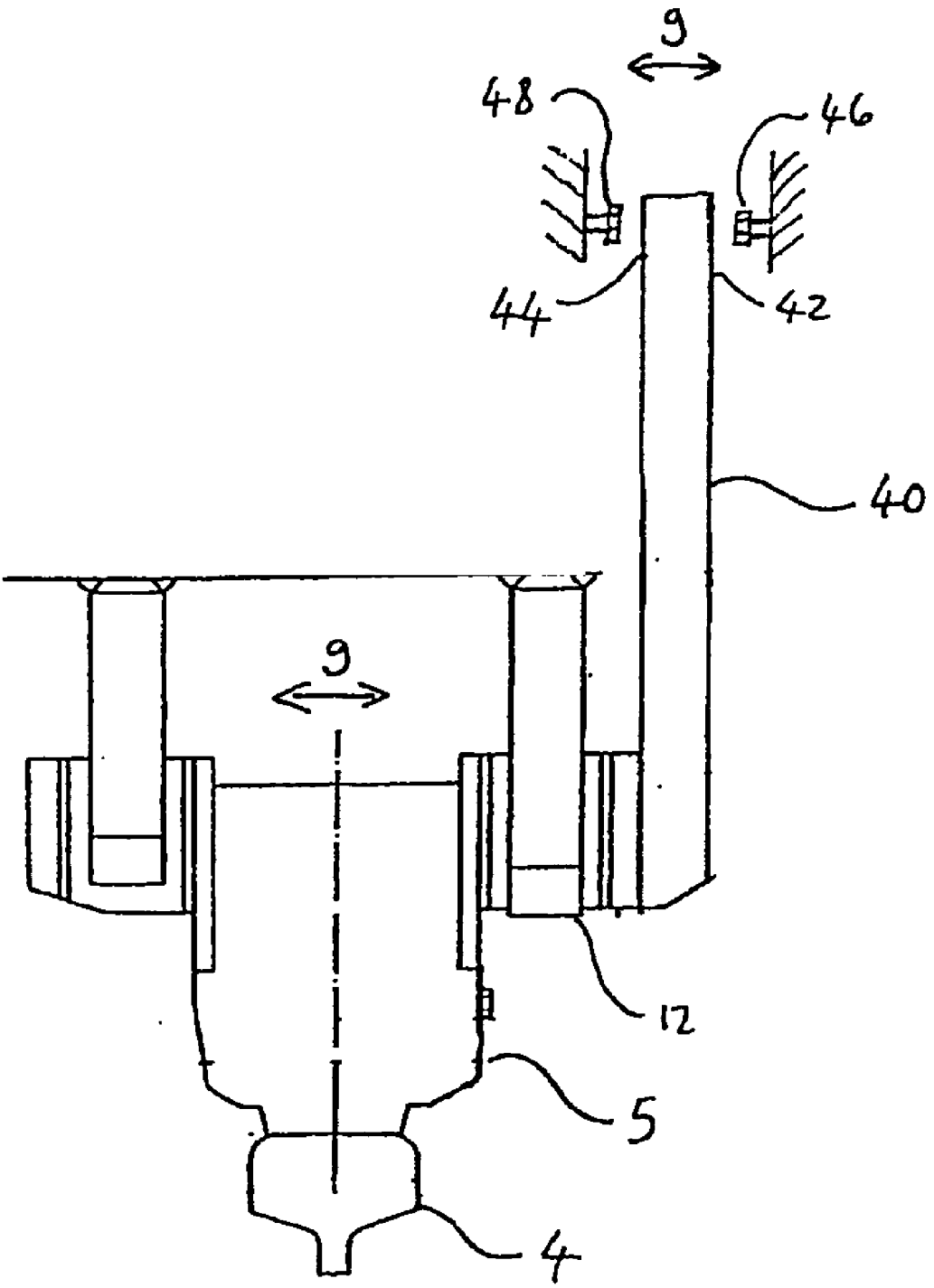

Fig 7

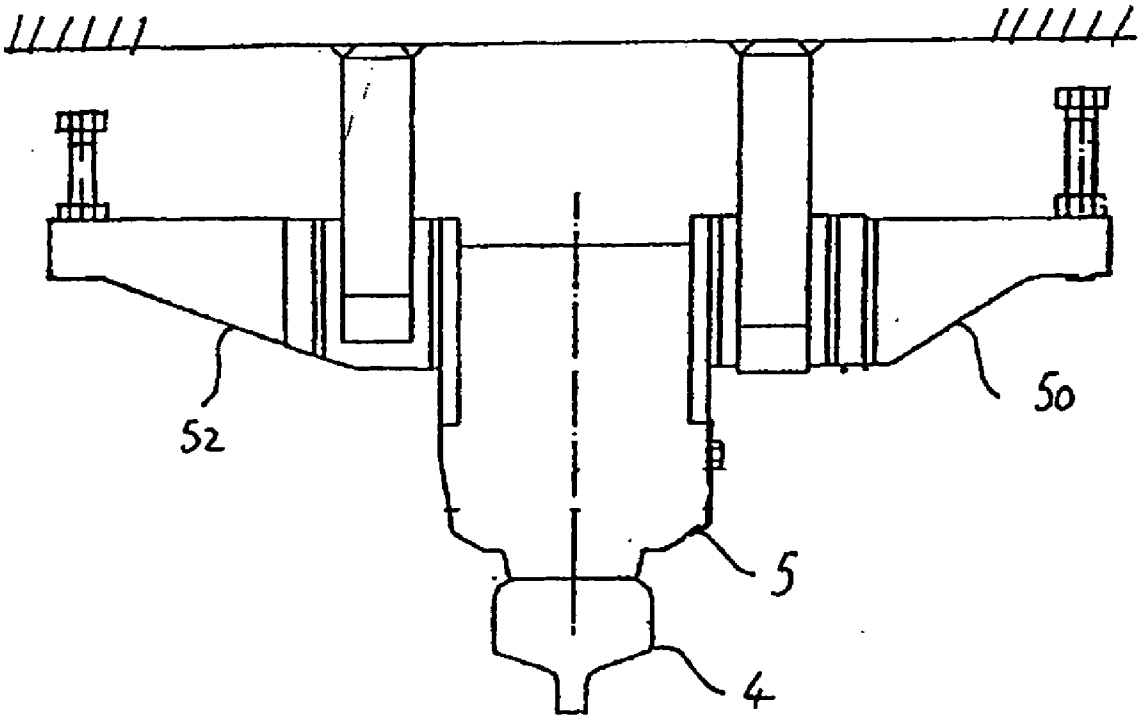

Fig 8

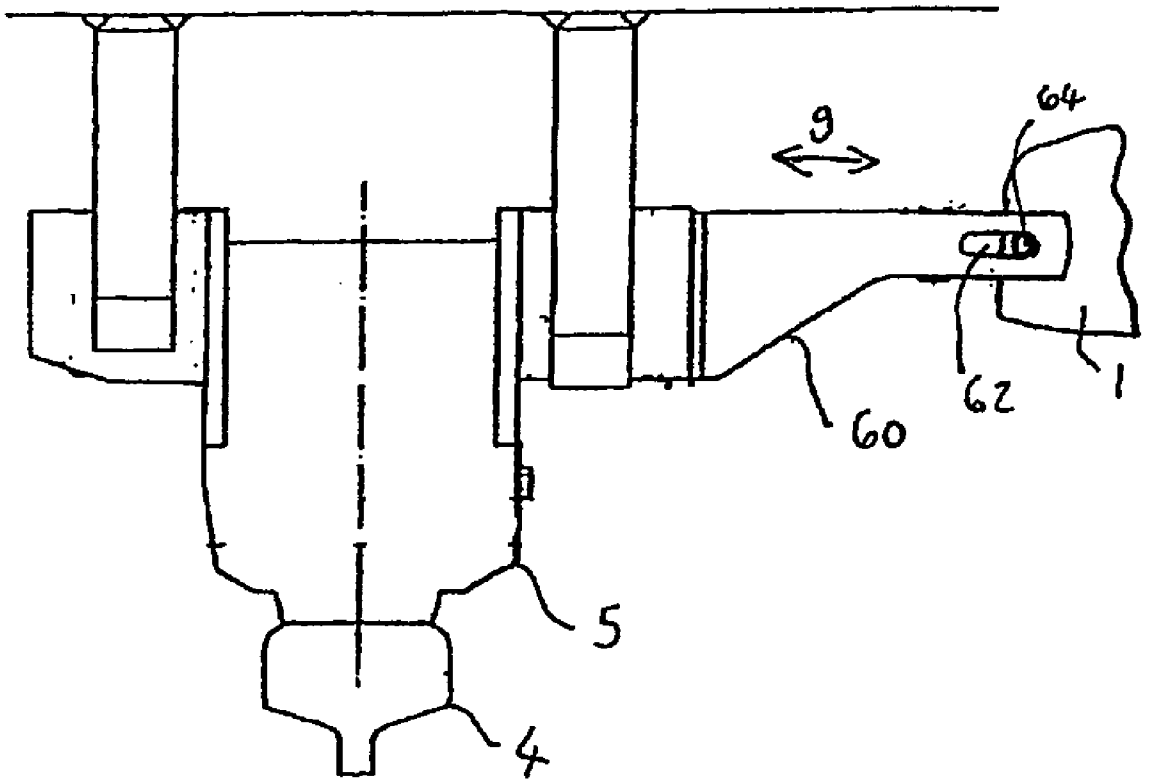

Fig 9

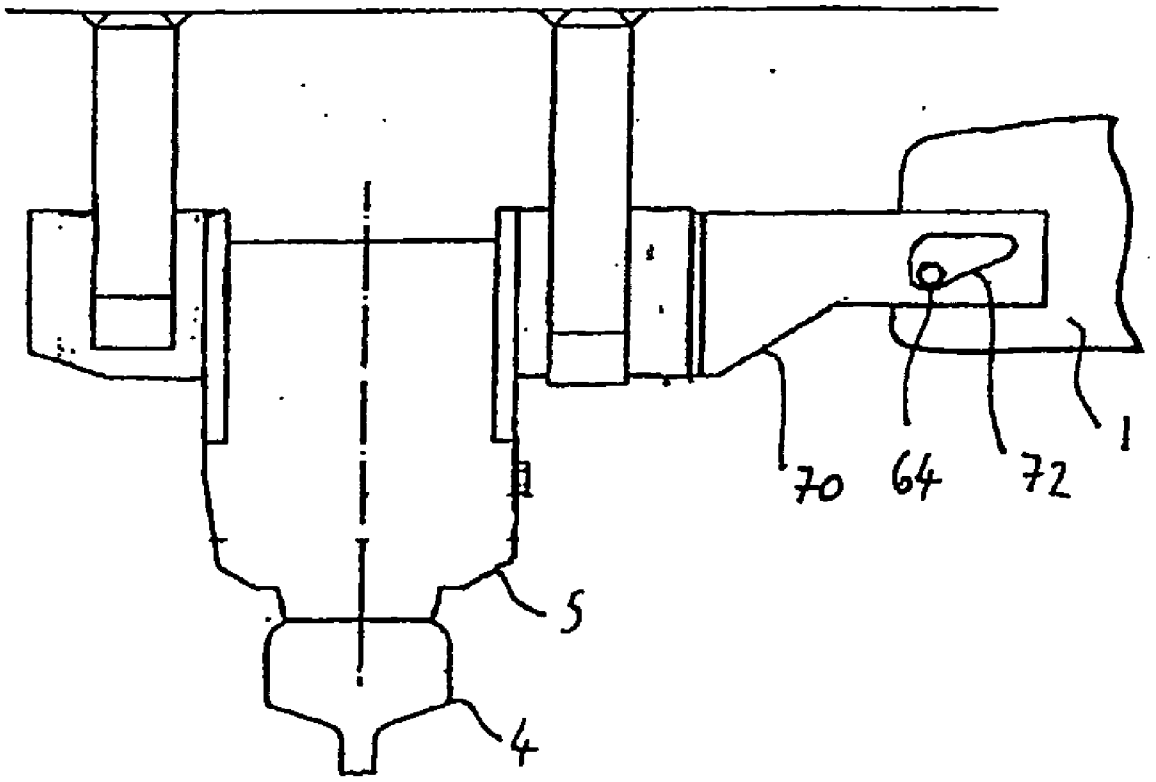

Fig 10

MAGNETIC RAIL BRAKE

[0001] The present invention relates to a magnetic rail brake for a rail vehicle and more particularly to a magnetic rail brake with improved stability from tipping. It also relates to a method of controlling the maximum permitted tilt of a magnet in a magnetic rail brake.

[0002] Modern rail vehicles may brake in a number of different ways including electrodynamic braking via the driving motor, eddy current braking via the rails, pneumatic or hydraulic braking acting on the wheels or axles and aerodynamic braking. Particularly in the case of trains or streetcars and other light rail vehicles, it is commonplace to use magnetic brake shoes which act directly on the rails. Such devices generally comprise a magnet suspended from the bogie or vehicle frame a small distance above the track. The magnet is supported by springs causing it to be biased away from contact with the track. On actuation of the magnetic rail brake, the magnet is pulled down into contact with the rails against the restorative spring force. The frictional contact force between the magnet and the track provides the necessary braking force. This braking force is transmitted to the rail vehicle through interacting elements arranged on the magnet and on the bogie which allow the longitudinal braking force to be transmitted.

[0003] In the present context, longitudinal is used to denote the lengthways direction of the rail vehicle and corresponds to the direction of the rails and track. It is accepted that this direction may of course also be considered as circumferential, when the vehicle negotiates a curved portion of track. Similarly, lateral, is used to denote the direction perpendicular to the rails across the track, which may or may not be horizontal, depending upon the presence of camber.

[0004] In order to follow the track, the magnet must also be laterally guided with respect to the rails. To this end, guides are usually provided which constrain the magnets to remain above the rail. These guides must however ensure a certain degree of lateral freedom in order for the magnet to optimally adapt to the track e.g. when negotiating curves. The guides ensure vertical motion of the magnet above the rail and may allow lateral motion of in the order of 8 mm. As a consequence of this lateral freedom, the magnets can also tilt about a longitudinal axis lying parallel to the rail.

[0005] Because of the nature of the upper surface of the track, it is also desirable that the magnet can tilt in order to optimise the magnetic attraction between the rail and the magnet. A typical electromagnet may, on activation, exert in the order of 80 KN of force on the rail. When compared with the weight of the magnet itself, which may be in the order of 2-3 KN, it can be appreciated that the magnet will tend to pull itself perpendicular to the largest portion of the rail surface, which under conditions of wear may not be horizontal. In general it is desirable that the magnet can tilt by between 2° and 3° either side of vertical.

[0006] The lateral freedom mentioned above has however been found to allow excess tilting of the magnets. Such excess tilting, which may be in the order of between 12° and 15°, is highly undesirable as it can present the lowermost side edge of the magnet to the rail. When crossing points or other rails, particularly under conditions of adverse wear of the rails or the brake, this lowermost edge of the magnet may snag on the side of the rail to be crossed and be caused to ride along it rather than over. Such action causes additional wear and in the worst case may lead to complete skewing of the magnet causing considerable damage to the magnetic brake, guides and bogie and even to derailment of the rail vehicle.

[0007] A prior art magnetic rail brake is known from document DE1780100 A. According to this arrangement, the individual brakes located on opposite sides of the bogie are connected by cross members, which link the magnets together but allow both to swing with respect to the bogie. A further mechanism is provided for bringing the magnets into alignment above the rail on actuation. Other similar arrangements are also known using cross members to allow lateral motion while preventing tilting. A problem which is common to all of these arrangements is the need for adequate space between the magnets for location of the cross members. In the case of modern low floor rail vehicles such as trams or streetcars, this space is no longer available. The use of such cross members also substantially prevents any tilting, which for the reasons given above is usually undesirable.

[0008] An alternative arrangement is known from DE4140056 A which relates to the parallel guiding of a brake magnet for maintaining the magnet parallel to the rail. The arrangement provides a bracket with rubber buffers at each end of the magnet, which permit lateral motion of each end by about 2 mm whereby the magnet can align with the rail. The disclosure is silent with respect to the problems of tilting.

[0009] There is therefore a need for an improved arrangement of magnetic rail brakes which ensures lateral freedom of movement of the magnet to follow the rail, while preventing excessive tilting, without the need for cross members extending across the rail vehicle. In particular there is a need to prevent magnetic brakes from skewing when activated during the crossing of points.

[0010] According to the present invention, there is provided a magnetic rail brake for a rail vehicle comprising a magnet supported from the rail vehicle, a guide assembly to guide the magnet for movement in a substantially vertical plane while allowing limited lateral movement and an extension arm. The extension arm is arranged to contact the rail vehicle at a distance from the magnet which is substantially greater than either the maximum extent of vertical movement or the maximum extent of lateral movement of the magnet to thereby reduce tilting of the magnet.

[0011] In a first embodiment of the present invention, the guide extension is provided by an arm rigidly attached to the magnet and extending a sufficient distance therefrom such that on tilting of the magnet by the maximum desired amount, the end of the arm swings through a distance equivalent to either the maximum lateral movement of the magnet or the maximum vertical movement of the magnet. By providing a stop, arranged on the body of the vehicle to stop the movement of the arm, further tilting of the magnet is prevented.

[0012] In this context, reference to the stop being on the body of the vehicle is intended to refer to the location of the stop as being fixed with respect to the magnet. Usually, the stop will be located on the bogie frame which carries the

wheels and the magnetic rail brake. Alternatively, it may be arranged to be attached on the wheel axles themselves. Of importance, is that the stop is in fixed vertical relation to the rail and to the mounting for the magnet i.e. on the rail side of any suspension system.

[0013] If the arm extends generally vertically, the stop should limit horizontal motion of the arm and it is the lateral freedom of movement of the magnet in relation to the length of the arm which determines the maximum angle of tilt. If the arm extends generally horizontally, the stop should limit vertical motion of the arm and it is the vertical freedom of movement of the magnet in relation to the length of the arm which determines the maximum angle of tilt.

[0014] In an alternative embodiment of the magnetic rail brake, the guide means may comprise a laterally sliding pivot arranged on the rail vehicle and the guide extension may comprises an arm, rigidly attached to the magnet and extending laterally to the sliding pivot whereby the magnet and arm can rotate around the pivot and slide laterally with respect to the rail vehicle. Such an arrangement is advantageous in that the magnet itself need no longer be laterally guided by vertical guides arranged on either side of it as is has been common in the past. Furthermore, the magnet may be set such that on contacting the rails it is substantially vertical with tilting occurring only on lifting. In this way it is assured that the magnet is always untilted when in contact with the rails, regardless of lateral displacement.

[0015] In a further alternative, the sliding pivot may allow a degree of movement of the pivot in the vertical direction whereby the precise degree of tilting of the magnet is determined.

[0016] Advantageously, in the above embodiments, the point of contact or pivot is arranged laterally outboard of the brake magnet. This allows full utilisation of the space between the wheels which is particularly important in the case of modern low floor designs.

[0017] Additionally, it may be desirable that the tilting of the magnet be used to provide a signal to a brake control unit whereby actuation of the brake may be momentarily terminated to allow realignment of the magnet prior to reactuation.

[0018] The present invention also provides a method of controlling the maximum permitted tilt of a magnet in a magnetic rail brake, the magnet being arranged for vertical and lateral movement, comprising rigidly attaching an extension arm to the magnet and controlling the movement of the end of the extension arm distant from the magnet, the length of the extension arm being substantially greater than either the maximum extent of vertical movement or the maximum extent of lateral movement of the magnet, to thereby control tilting of the magnet.

[0019] In general, it is envisaged that the present invention be used in the context of electromagnets. It is however also possible that other forms of magnet may be employed.

[0020] Further aspects and advantages of the present invention are embodied in the dependent claims.

[0021] Embodiments of the present invention will now be described, by way of example only, having reference to the accompanying figures, in which:

[0022] **FIG. 1** is a side view of a rail vehicle bogie incorporating a prior art magnetic rail brake;

[0023] **FIG. 2** is an end view of a prior art magnetic rail brake;

[0024] **FIG. 3** is an end view of a first embodiment of a magnetic rail brake according to the present invention;

[0025] **FIG. 4** is an end view of a second embodiment of a magnetic rail brake according to the present invention including an adjustable stop;

[0026] **FIG. 5** is an end view of the embodiment of **FIG. 4**, tilted into engagement with the counterstop;

[0027] **FIG. 6** is an end view of a third embodiment of a magnetic rail brake according to the present invention including a stop adjustable for tilting both inwards and outwards;

[0028] **FIG. 7** is an end view of a fourth embodiment of a magnetic rail brake according to the present invention including a vertically extending arm;

[0029] **FIG. 8** is an end view of a fifth embodiment of a magnetic rail brake according to the present invention including two laterally extending arms;

[0030] **FIG. 9** is an end view of a sixth embodiment of a magnetic rail brake according to the present invention including a sliding pivot; and

[0031] **FIG. 10** is an end view of a seventh embodiment of a magnetic rail brake according to the present invention including a profiled pivot plate.

[0032] **FIG. 1** shows a bogie of a typical rail vehicle in side view illustrating bogie frame **1**, wheels **2** and magnetic rail brake **3** arranged to follow a rail **4**. The magnetic rail brake **3** comprises a magnet **5**, which is supported from the bogie frame **1** a height h above the rail **4** by a pair of tension springs **7**. Although tension springs are illustrated, it is well known that alternative suspension devices may also be used including compression springs arranged e.g. above the bogie frame, hydraulic or pneumatic cylinders or actuators, servo actuators, electromagnets and the like.

[0033] The magnet **5** is an electromagnet comprising an internal coil, which may be actuated to generate a pair of magnetic poles. It is also conceivable that instead of an electromagnet, a conventional magnet could also be used.

[0034] Actuation means (not shown) causes actuation of the electromagnet on receiving a braking signal from the driver. On actuation, the magnet is attracted to the metal rail **4** with such a force that elongation of the springs **7** occurs and the spring is drawn down onto the rail. The attractive force between the magnet and the rail and the coefficient of friction between them deter-ine the resulting braking force.

[0035] In order to ensure that the rail vehicle is brought to rest by this braking force, it must be effectively transmitted from the magnet fo the bogie. To achieve this, transmitting members **10** are rigidly mounted to the magnet. These transmitting members **10** interact with supporting members **12** rigidly attached to the bogie frame **1**. In the device according to **FIG. 1** and as better disclosed in **FIG. 2**, these supporting members **12** also serve to laterally support the magnet and guide it to follow the rail **4**.

[0036] **FIG. 2** is a view along line **2-2** in **FIG. 1** and shows the magnet **5** supported between supporting members **12**. As can be seen from **FIG. 2**, a gap between the magnet **5** and the supporting members **12** ensures a limited freedom of lateral movement whereby the magnet **5** can better align with the rail **4** on negotiating a curve or the like. The gap has the maximum value g which represents the allowable lateral movement of the magnet. **FIG. 2** also illustrates how the gap g also allows the magnet to tilt to adapt to the upper surface of the rail but how this tilting can also lead to snagging and over-tilting when braking during negotiating of points or crossing of other rails.

[0037] **FIG. 3** shows a similar view to **FIG. 2** of a first embodiment of the invention in which the magnet **5** is provided with a guiding extension in the form of an arm **20** rigidly attached to the magnet **5**. In this embodiment the arm **20** comprises an extension of one of the transmitting members **10**. It is also within the scope of the present invention that the arm be a separate element attached directly to the magnet **5**. The arm **20** extends laterally a distance d from the magnet. In order to limit rotation of the magnet **5**, the arm **20** is provided with a stop surface **24** which interacts with a counterstop **26** to prevent the arm from rotating anti-clockwise more than the distance h corresponding to the distance descended by the magnet **5** in order to contact the rail **4**. Since the distance d is substantially greater than h, the maximum angle of tilt in this direction is small and corresponds approximately to Arctan h/d.

[0038] The counterstop **26** may be provided on the bogie frame **1** or any other suitable part of the vehicle body which serves as a fixed reference to determine and limit the tilting of the magnet. Advantageously, in **FIG. 3**, the stop is located at an outboard region of the train and does not therefore impinge on the limited space in the region between the wheels as is the case when a cross member is used.

[0039] Generally, rail vehicles are susceptible to wear. In particular, as the wheels **2** and the magnet **5** wear down, the settings of various parameters including the height of the brake magnet **5** must be adjusted. In order to allow for this and also to permit adjusting of the sensitivity of the tilt limitation to meet different track conditions, it is desirable for the stop surface to be adjustable.

[0040] **FIGS. 4 and 5** illustrates a second embodiment of the present invention in which details of the suspension of the magnet **5** have been omitted for clarity. The arm **20** is provided with an adjustable stop surface in the form of a set screw **28**. By adjusting the set screw **28**, the point at which the set screw **28** contacts the counterstop **26** may be adjusted. It is noted, that it is possible to set the distance between the set screw **28** and the counterstop **26** to less than the height h. In this case, the tilting of the lowered brake is further reduced, but on deactivating the brake, the magnet returns vertically through the height h. During this movement, set screw **28** will contact counterstop **26** causing the arm **20** and magnet **5** to tilt in a clockwise direction.

[0041] While in many circumstances it is sufficient to stop tilting only in one direction e.g. outwards of the track, there are also circumstances where it is necessary to prevent tilting in either direction.

[0042] **FIG. 6** illustrates a third embodiment of the present invention which uses a second set screw **30** and a second counterstop **32** to limit tilting in the clockwise direction too. It is noted that while the adjustment according to these embodiments utilises set screws attached to the arm, it is equally possible to use set screws mounted as part of the counterstop. Equally, the skilled person will be well aware of many variations for the arrangement of the counterstops to achieve the desired effect. For instance, the second counterstop **32** may be adjustably mounted from the first counterstop **26** by further set screws, with the arm **20** and first set screw **28** captured in between.

[0043] An alternative arrangement of guiding extension is illustrated in **FIG. 7** which discloses a generally vertically extending arm **40**. This embodiment illustrates the strength of the present invention in providing the control of tilting at any point where sufficient space is available for such control. If the space beneath the vehicle is insufficient, or the required distance d cannot be achieved, the arm may follow a different extension. The arm **40** has two stop surfaces **42** and **44** and is constrained between a pair of counterstops which in this embodiment are provided by set screws **46** and **48**. The sum of the gaps between the set screws **46**, **48** and their respective stop surfaces **42**, **48** must correspond to the gap g. The maximum angle of tilt is now however reduced in proportion to the difference in height between the arm **40** and the portion of the magnet **5** which is guided between the supporting members **12**.

[0044] A further and fifth embodiment of the present invention is disclosed in **FIG. 8** and shows the magnet **5** provided with two arms **50** and **52**. Each arm is provided with its own set screw whereby the maximum allowed tilt in either direction can be independently set.

[0045] An alternative principle of guiding is disclosed according to the sixth and seventh embodiments as disclosed in **FIGS. 9 and 10**. According to **FIG. 9**, the magnet **5** is provided with an arm **60** extending laterally in a similar way to earlier embodiments. Unlike the earlier embodiments however, the end of the arm **60** is provided with a slot **62** in which slides a pin **64** located on the bogie frame **1** or other fixed reference point, to form a sliding pivot. The slot **62** allows the pin **64** to move laterally a distance g and thus serves the function of the supporting means **12**, which in this embodiment are no longer required for lateral guiding. The whole arm **60** and magnet **5** may thus pivot about the pin **64** from a vertical position of the magnet when in engagement with the rail **1** to a slightly tilted position once raised.

[0046] The embodiment of **FIG. 9** does not allow for any tilting of the magnet when in contact with the rail. If this is nevertheless required, the slot must adopt a different form. According to **FIG. 10** there is provided an alternative form of arm **70** having a slot **72** which at its extremity closest to the magnet is wider than the pin **64**. In this region of the slot, the magnet is free to tilt within the width of the slot. Clearly, other forms of slot may be provided with profiles which match or compensate for the upper surface of the rail **4** in order to encourage appropriate and controlled tilting of the magnet.

[0047] The embodiments of **FIGS. 9 and 10** do not disclose any form of adjustment to compensate for wear of the wheels and brakes or for adjustment of the settings. It is evident to the skilled person however that such adjustment could be provided at various positions within the system, either at the pin **64** or at the slots **62** or **72** or elsewhere on

the magnet itself. Clearly too, if the pin is to serve the function of pivot and lateral guide for the brake magnet **5**, it should be of sufficiently solid construction to withstand the forces encountered during braking.

[**0048**] A particularly advantageous aspect of the present invention is the possibility of including a tilt sensor to detect the movement of e.g. the arm **20** or **40**. By providing an appropriate motion or pressure type sensor, tilting beyond a given angle may be detected. This may be used to deactivate the magnet allowing momentary disengagement from the rail. This may be sufficient to prevent the brake magnet from departing on another rail and restore it to its untilted position on resuming braking.

[**0049**] While the above examples illustrate preferred examples of the present invention it is noted that various other arrangements may also be considered which fall within the spirit and scope of the appended claims.

1. A magnetic rail brake for a rail vehicle comprising:

a magnet supported from the rail vehicle;

a guide assembly to guide the magnet for movement in a substantially vertical plane while allowing limited lateral movement; and

an extension arm, the extension arm arranged to contact the rail vehicle at a distance from the magnet which is substantially greater than either the maximum extent of vertical movement or the maximum extent of lateral movement of the magnet to thereby reduce tilting of the magnet.

2. The magnetic rail brake according to claim 1, wherein the extension arm is rigidly attached to the magnet and extends generally therefrom.

3. The magnetic rail brake according to claim 1, wherein the extension arm comprises a first stop surface for interacting with the rail vehicle to prevent tilting of the magnet in a first direction.

4. The magnetic rail brake according to claim 3, wherein the extension arm comprises a second stop surface for interacting with the rail vehicle to prevent tilting of the magnet in a second direction opposite to the first direction.

5. The magnetic rail brake according to claim 1, wherein the extension arm extends laterally outwardly away from a centreline of the rail vehicle.

6. The magnetic rail brake according to claim 1, wherein the extension arm extends generally vertically.

7. The magnetic rail brake according to claim 1, wherein the extension arm comprises two branches extending in different directions.

8. The magnetic rail brake according to claim 1, wherein the extension arm comprises adjustable stop means.

9. The magnetic rail brake according to claim 1, wherein the rail vehicle is provided with adjustable counterstop means.

10. The magnetic rail brake according to claim 1, further comprising an actuation device causing the magnet to be attracted to a rail on which the rail vehicle travels.

11. The magnetic rail brake according to claim 10, further comprising a tilt detection device adapted to prevent actuation of the actuation device on tilting of the magnet by more than a given angle.

12. The magnetic rail brake according to claim 1, wherein the guide assembly comprises a laterally sliding pivot arranged on the rail vehicle and the extension arm is rigidly attached to the magnet and extends laterally to the sliding pivot whereby the magnet and extension arm can rotate around the pivot and slide laterally with respect to the rail vehicle.

13. The magnetic rail brake according to claim 12, wherein the laterally sliding pivot comprises a profiled slot.

14. The magnetic rail brake according to claim 1, wherein the guide assembly comprises a pivot arranged on the rail vehicle and the extension arm comprises an extendable arm, rigidly attached to the magnet and extending laterally to the pivot whereby the magnet and extension arm can rotate around the pivot and the extension arm can extend to allow lateral movement of the magnet with respect to the rail vehicle.

15. The magnetic rail brake according to claim 1, wherein the magnet is constrained to tilt no more than 6° in either direction.

16. The magnetic rail brake according to claim 1, wherein the magnet is constrained to tilt no more than 3° in either direction.

17. The magnetic rail brake according to claim 1, wherein the magnet is supported from the rail vehicle by a suspension device comprising a compression or tension spring.

18. The magnetic rail brake according to claim 1, wherein the magnet is supported from the rail vehicle a suspension device comprising an actuator device.

19. A method of controlling the maximum permitted tilt of a magnet in a magnetic rail brake, the magnet being arranged for vertical and lateral movement, comprising attaching an extension arm to the magnet and controlling the movement of the end of the extension arm distant from the magnet, the length of the extension arm being substantially greater than either the maximum extent of vertical movement or the maximum extent of lateral movement of the magnet, to thereby control tilting of the magnet.

20. (canceled)

21. A rail vehicle movable along a rail, the rail vehicle comprising:

a magnet supported from the rail vehicle in close proximity to the rail;

a guide assembly for guiding the magnet for movement in a first direction towards and away from the rail while allowing limited lateral movement in a second direction;

an actuator for causing movement of the magnet in the first direction; and

an extension arm extending from the magnet the extension arm arranged to contact the rail vehicle at a distance from the magnet which is substantially greater than the maximum extent of movement of the magnet in either the first or second directions thereby reducing tilting movement of the magnet.

* * * * *