May 30, 1967 D. L. GIBSON ET AL 3,322,684

APPARATUS FOR MAKING FROTH

Filed Nov. 26, 1963

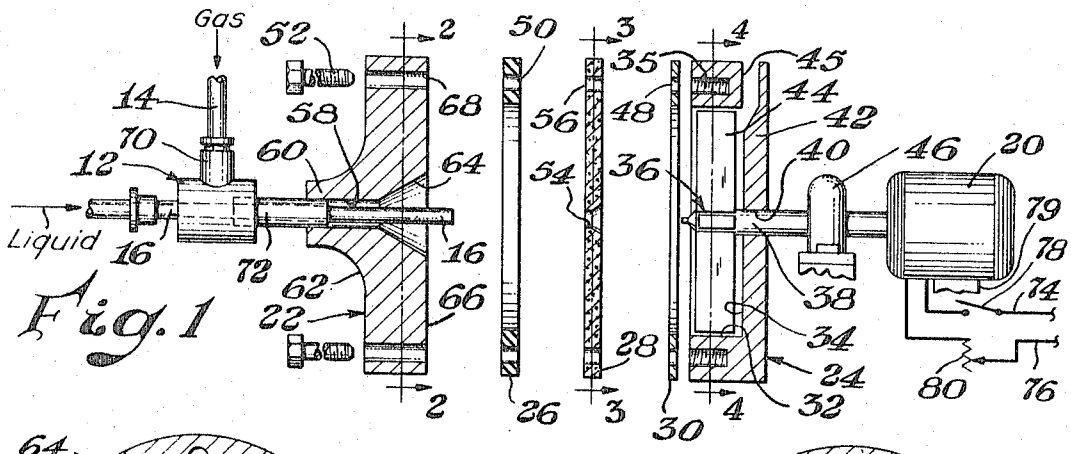

Fig. 1

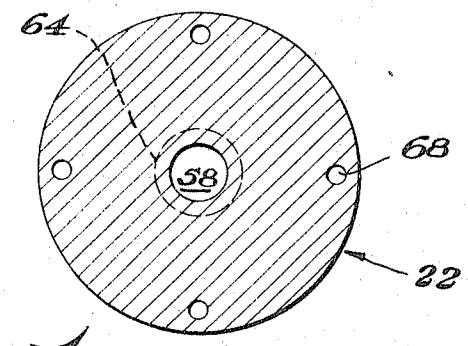

Fig. 2

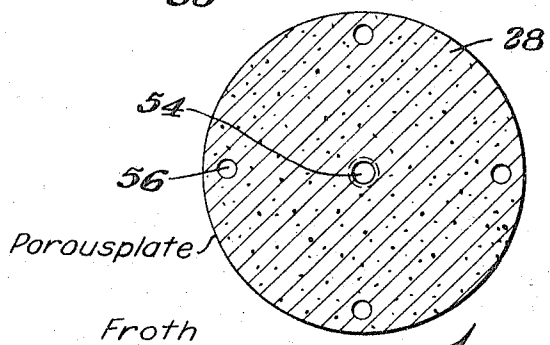

Fig. 3

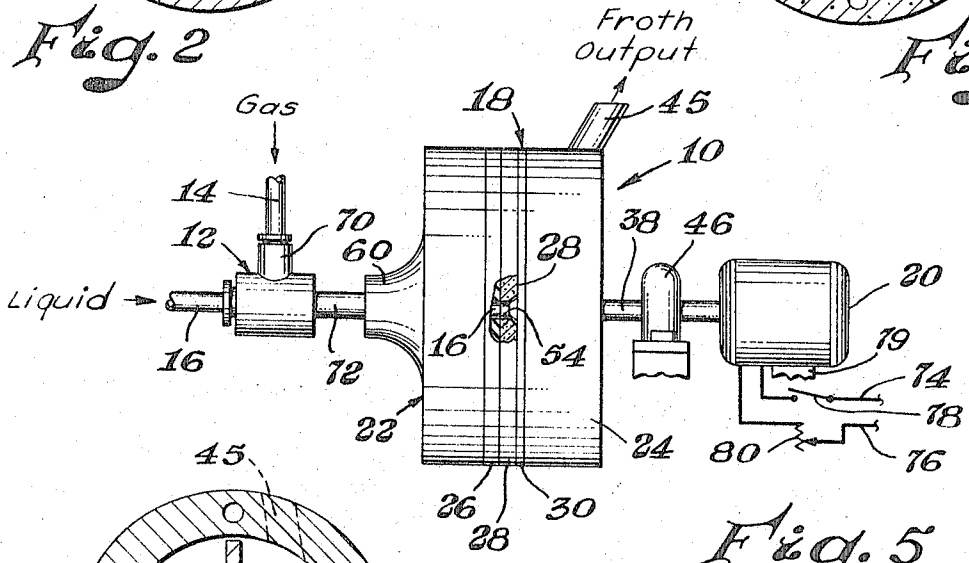

Fig. 5

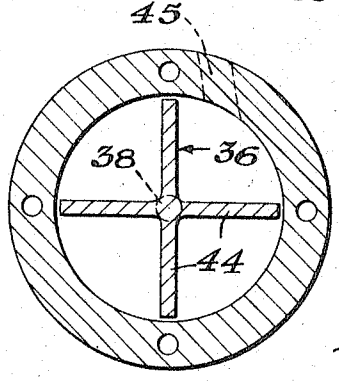

Fig. 4

INVENTORS.
Dennis L. Gibson
BY Douglas S. Chisholm
Earl D. Ayers
AGENT

United States Patent Office 3,322,684
Patented May 30, 1967

3,322,684

APPARATUS FOR MAKING FROTH

Dennis L. Gibson and Douglas S. Chisholm, Midland, Mich., assignors to The Dow Chemical Company, Midland, Mich., a corporation of Delaware

Filed Nov. 26, 1963, Ser. No. 326,017
8 Claims. (Cl. 252—359)

This invention relates to mixing apparatus and particularly to a method and apparatus for making froths.

The production of froths, e.g., the dispersion bubbles of gas in a liquid, in which the size of the bubbles and their number and distribution in a liquid may readily be controlled has been a desirable objective for a considerable time.

Accordingly, a principal object of this invention is to provide an improved apparatus for making a froth.

Another object of this invention is to provide an improved, simpler apparatus for making a froth.

A further object of this invention is to provide an improved, more economical apparatus for making a froth.

In accordance with this invention gas is passed through a porous plate and into a chamber into which liquid is supplied wherein a rotating impeller whose blades are disposed in close spaced relationship with respect to the porous plate shears off gas bubbles as the gas leaves the porous plate, mixes the bubbles with the liquid in the chamber, and discharges the resulting froth from the peripheral part of the chamber.

Cell size and number is varied by changing the gas flow rate, impeller rotation rate, rate at which liquid is supplied to the chamber, the spacing between the impeller blades and the porous plate, and the size of the pores in the porous plate.

The invention, as well as additional objects and advantages thereof, will best be understood when the following detailed description is read in connection with the accompanying drawings, in which:

FIG. 1 is an exploded view of froth making apparatus in accordance with this invention;

FIG. 2 is a sectional view taken along the line 2—2 of FIG. 1;

FIG. 3 is a sectional view taken along the line 3—3 of FIG. 1;

FIG. 4 is a sectional view taken along the line 4—4 of FIG. 1; and

FIG. 5 is a side elevational view of the apparatus shown in FIG. 1.

Referring to the drawings, and particularly to FIG. 5, there is shown froth making apparatus, indicated generally by the numeral **10**, in accordance with this invention. The apparatus comprises a gas and liquid inlet member **12**, to which the individual gas inlet **14** and liquid inlet **16** are coupled, a housing **18**, and driving motor **20**.

Referring now to FIGS. 1, 2, 3, and 4, it may be seen that the housing **18** comprises an input section **22**, an output section **24**, and a gasket spacer section **26** and a porous plate **28**, and a gasket **30** sandwiched between the sections **22**, **24**.

The housing section **24** is a generally shallow cup shaped member. Its interior side walls **32** are substantially cylindrical and its end wall **34** which is substantially perpendicular to the side walls, the side and end walls defining a cylindrically shaped cup. A bladed impeller **36** whose blades **44** extend almost to the side walls **32** is coupled to a longitudinally disposed shaft **38** which extends through a bore **40** in the end **42** of the housing section **24**. The shaft **38**, passing through the bearing **46**, may be the shaft of the motor **20**, as shown, or other suitably journaled shaft which is adapted to be rotated by other means (not shown). Threaded bores **35**, disposed

near the periphery of the section **24**, accommodate the bolts **52** when the device is assembled.

The four blades **44** of the impeller **36**, disposed within the section **24**, extend substantially perpendicularly with respect to the longitudinal axis of the shaft **38** and are disposed at an angle of approximately 90 degrees with respect to each other. The length of the blades **44** is such that the blades extend from the shaft **38** to near the side wall **32**. Steel is commonly the structural material used in making the impeller, although other materials which do not react with the materials fed through the device may be used.

An output bore **45** extends between the peripheral part of the section **24** and the interior of the section.

The gasket **30** and the spacer gasket **26** are each annular in form and have bores **48**, **50**, respectively, through which the bolts **52** pass when the device is assembled.

The porous plate **28** is disc-like in form and has pores having a mean diameter of 15 microns. The plate **28** has a bore **54** which is aligned with the longitudinal axis of the device (axis of shaft **38**, too). The bore **54** is counterbored on the side facing the impeller. The plate **28**, like the spacer-gasket **26** and gasket **30**, has bores **56** adjacent to its peripheral part.

The input section **22** is, generally, a thick plate having an axially disposed bore **58** extending therethrough and an axially disposed boss **60** on the exterior side **62** of the section. The bore **58** has a flared counterbored part **64** on the interior side **66** of the section. Bores **68**, disposed near the peripheral part of the section **22**, accommodate the bolts **52**.

The gas and liquid inlet member **12** is, in effect, a T type pipe coupling in which the gas line **14** is coupled to the transverse segment **70** of the coupling and the liquid inlet member **16** is coupled to one of the in-line segments of the coupling **12**. The member **16**, smaller in outer diameter than the diameter of the bore which extends through the coupling **12**, extends through and beyond the coupling **12**. The length of the member **16** which extends beyond the coupling **12** is such that, when the device is assembled, the member **16** extends into the bore **54** of the porous plate **28**.

A larger diameter conduit **72** is coupled between the coupling **12** and the bore **58** of the input section **22**, the diameter of the conduit **60** being such that it surrounds and is spaced from the member **16**.

In operation, liquid is pumped through the inlet tube **16** which extends through or at least into the bore **54** in the porous plate **28**, and into a chamber which is bounded on one end by the porous plate **28** and on the other end and sides by the housing section **24** and, to a small extent, by the gasket **30**.

The chamber just described, with the impeller **36** disposed therein, receives water, other liquid or liquid mixture directly from the inlet tube or conduit **16**. The impeller **36**, coupled to the shaft **38**, is rotated by means of the motor **20**, which is attached to a suitable base **79** and is energized through the electrical leads **74**, **76**, the switch **78**, and speed control **80**. Gas enters the apparatus through the inlet tube **14**, the inlet member **12** and the space between the tube **16** and the walls of the conduit **72** and the bore **58**. The gas then enters the space defined by the interior side **66** of the section **22**, the gasket spacer **26**, and the surface of the porous plate **28** which faces the surface **66** of the section **22**.

When the gas pressure is in excess of the pressure in the chamber containing the impeller **36**, gas permeates the porous plate **28** and becomes mixed with the liquid in the impeller containing chamber. The spacing between the porous plate **28**, made of sintered stainless steel, for example, and the blades **44** of the impeller should be small, less than one-fourth inch, for example, and preferably

smaller in order to promote more efficient shearing of air bubbles off the plate **28**. Porous ceramic or other material having suitable physical characteristics and which is compatible with the liquid and gas may be substituted for stainless steel in the porous plate **28**.

The mean diameter of the pores in the porous plate **28** should be between 5 and 165 microns. Fine pores require a higher pressure drop across the plate than coarse pores. The thickness of the plate **28** is such that it will maintain a fixed position during operation. The plate **28** may be made of steel, other metal, or vitreous material, for example. In one apparatus made in accordance with this invention and used for experimental purposes, the thickness of the plate **28** is .040 inch, the mean diameter of the pores is 15 microns, and the diameter of the impeller is 4 inches, the blades being in the form of two intersecting bars having their longitudinal axes in the same plane and oriented 90 degrees apart. The motor **20** is a series wound motor having a maximum speed of about 3,600 r.p.m. under loaded conditions.

When a 1 percent solution, alkyl benzene sulfonate and water, for example, but no gas, was passed through the above apparatus, the stream emerging from the apparatus was slightly turbid in appearance and was scattered in a non-uniform flow pattern.

The introduction of a small amount of air through the plate **28** eliminated the non-uniformity of the stream emerging from the pump and imparted to it a creamy appearance.

As the rate of air flow was increased, the size of bubbles in the froth leaving the apparatus increased.

Finally, a rate of gas input was reached (liquid input rate constant during the tests described above) beyond which the flow from the apparatus became erratic with sporadic bursts of air and then froth.

At constant air-flow rate, increasing the speed of impeller rotation tends to decrease the size of the bubbles in the froth, but the effect is not so pronounced as that due to decreasing air-flow rate at a constant impeller speed.

The best operating conditions for individual devices in accordance with this invention, of course, will be determined by the operator under actual working conditions.

This apparatus is useful for the manufacture of froth for flotation processes, fire fighting foams, certain plastic foams, notably urethanes, which involve whipping action, or foams of glycerrhyzic acid, for example.

While impellers having solid blades have been heretofore described, the blades may be wires, as in a brush, for example, or may be serrated.

What is claimed is:

1. Apparatus for making froths, comprising an enclosed cylindrical chamber having opposed, spaced-apart, parallel end walls, side walls joining said end walls, a porous, parallel plate intermediate said end walls, means for introducing liquid into said chamber thru one end wall, means for withdrawing froth from said chamber, a rotatable bladed impeller being disposed on a shaft in said chamber with its blades generally closely adjacent to and coaxially aligned with said side walls, porous plate and other end wall, means for rotating said impeller, said one end wall comprising means including a cover plate spaced from said porous end wall for introducing gaseous foaming material into said chamber through the pores of said porous plate.

2. Apparatus in accordance with claim **1**, wherein said means for introducing liquid into said chamber comprises a hollow conduit which is coupled to a bore extending through one of said end walls.

3. Apparatus in accordance with claim **1**, wherein said means for withdrawing mixture from said chamber comprises a bore extending into said chamber from a peripheral part thereof.

4. Apparatus in accordance with claim **1**, wherein said means for rotating said impeller comprises a motor coupled to said shaft, said shafting extending through one of said end walls.

5. Apparatus in accordance with claim **1**, wherein said porous wall has pores whose diameter range between 5 and 165 microns.

6. Apparatus in accordance with claim **1**, wherein said impeller blades are disposed not more than ¼ inch from said porous wall.

7. Apparatus in accordance with claim **1**, wherein said porous wall is made of sintered stainless steel.

8. Apparatus in accordance with claim **1**, wherein said porous wall is made of ceramic material.

References Cited

UNITED STATES PATENTS

2,791,404	5/1957	Kelly et al.	259—9
3,118,958	1/1964	White	261—87

NORMAN YUDKOFF, *Primary Examiner.*

J. SOFER, *Assistant Examiner.*