June 2, 1931. H. E. COOLEY 1,808,530

CHEESE CONTAINER

Filed April 15, 1929

FIG. 1.

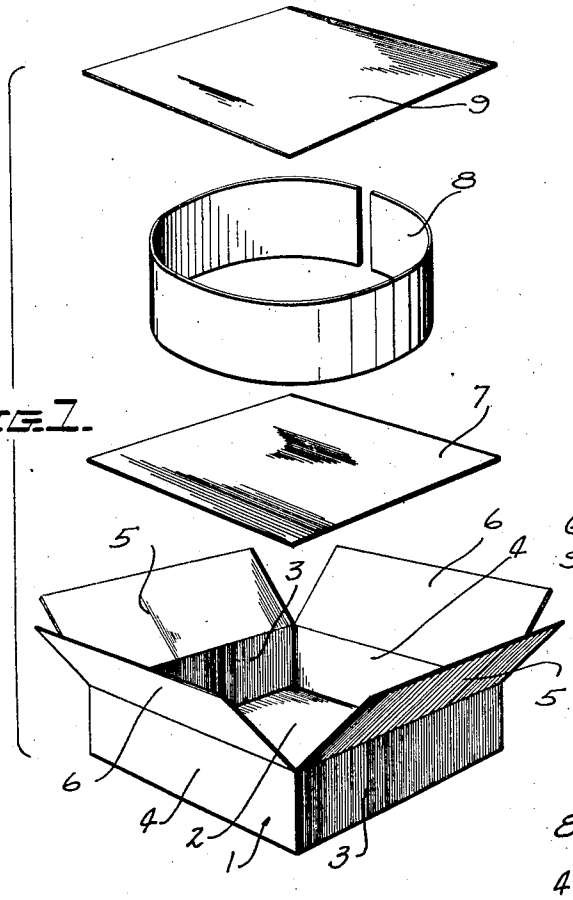

FIG. 2.

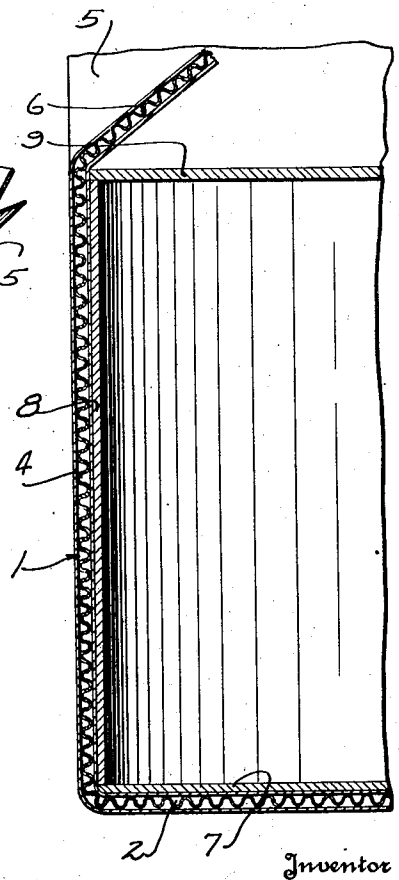

FIG. 3.

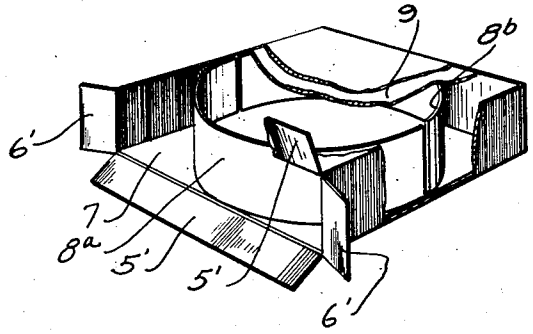

Inventor

Herbert E. Cooley

By

Bothum, Hudnall, Lecher, McNamara and Michael

Attorney

Patented June 2, 1931 1,808,530

UNITED STATES PATENT OFFICE

HERBERT E. COOLEY, OF WEST BEND, WISCONSIN

CHEESE CONTAINER

Application filed April 15, 1929. Serial No. 355,085.

This invention relates to a container especially designed for use in storing, stacking and shipping drum cheese, that is, cheese having the form of a cylinder.

Heretofore, the most satisfactory container devised for drum cheese is a nailed wood box which, although serving to properly protect the cheese, is disadvantageous for a number of reasons, principal among which are the increasing cost of such boxes, their weight, which makes them difficult to handle and increases the cost of shipping, and finally the difficulty of opening such nailed wood boxes.

The provision of a satisfactory type of container for drum cheese presents a rather difficult problem as the container must be resistant to and non-softening under the action of moisture or the action of grease, butterfat or paraffin and further must be of light weight and of comparatively inexpensive material and yet have the capacity of relieving the cheese of any load or weight. The latter is especially important as, if the cheese is weighted, the upper portion thereof will be blackened and hardened and its qualities will be impaired. This not only means loss but makes the cheese less attractive to the trade.

The present invention proposes the provision of a composite type of container especially designed and adapted for use in storing, stacking and shipping drum cheese, and which is comparatively inexpensive to produce and light in weight, and yet effective to protect the cheese and relieve it of load especially when stacked.

In carrying out the present invention a container is provided which comprises an outer fiber carton which may be of any appropriate form or construction but which is preferably of rectangular form and provided with suitable flaps to permit of ready and convenient access to the interior of the container. A bottom plate of thin sheet-like wood is disposed flatly against the bottom of the carton and is preferably the same shape as the bottom and co-extensive therewith. The drum cheese is placed in the container and rests directly on the bottom plate. Surrounding the cheese is a ribbon of thin sheet-like wood set on edge within the carton, that is, with its lower edge engaging the bottom plate. The ribbon is constructed so that the grain of the wood of which it is made up runs vertically in the assembly. A top plate of thin sheet-like wood directly engages the upper edge of the ribbon and is supported thereby and is also flatly engaged with the undersurface of the top of the carton with which it is preferably co-extensive. The ribbon is of curved form and may consist of a single piece of wood having substantially the form of a circle or annulus, or it may be made up of a number of sections of arcuate form. Due to the curved formation of the ribbon and to the engagement of its edges with the top and bottom plates the ribbon is held against any lateral displacement and this, coupled with the vertical disposition of the grain of the ribbon, provides a structure which is capable of withstanding high compressive stresses without deformation. Preferably the ribbon is of slightly greater height than the drum cheese so as to relieve the cheese of all load. This is especially desirable when the containers are stacked, as they always are during shipment and in storage, since it prevents the blackening and hardening of the upper portion of the cheese. In general the plates and ribbon when assembled with the carton reinforce the carton and are in load sustaining and protective relation to the cheese contained therein. Being constructed of wood the top and bottom plates in the ribbon preclude the softening or breaking down of the carton under the influence of grease, butterfat or paraffin which might otherwise find their way to the carton from the cheese. They also protect the carton from softening under the action of moisture or sweat of condensation on the cheese resulting from temperature changes incident to refrigeration.

Other objects and advantages reside in certain novel features of the construction, arrangement and combination of parts which will be hereinafter more fully described and particularly pointed out in the appended claims, reference being had to the accompanying drawings forming a part of this specification, and in which:

Figure 1 is a group view in perspective showing the elements of one type of container prior to assembly;

Figure 2 is a fragmentary view in transverse vertical section showing how the elements are assembled in the carton; and

Figure 3 is a fragmentary perspective view showing a slightly different form of the invention.

Referring to the drawings and more particularly to Figures 1 and 2, the numeral 1 designates an ordinary fiber carton having a rectangular bottom wall 2, vertical side walls 3 and vertical end walls 4. Pairs of flaps 5 and 6 are connected to the side and end walls respectively and are adapted to be folded over to close the opening in the top of the carton, the flaps 6 being folded inwardly into horizontal alinement and the flaps 5 being folded down on top of the flaps 6. A bottom plate 7 of thin sheet-like wood is provided and is disposed flatly against the bottom wall 2, as indicated in Figure 2. This plate 7 may be of the same shape and size as the bottom wall 2. A ribbon 8 of thin sheet-like wood is next positioned in the container and has its lower edge resting on the bottom plate 7. The drum cheese is then inserted in the container and rests on the bottom plate 7 and is substantially surrounded by the ribbon 8 which approximately parallels the periphery of the cheese. The wood of which the ribbon 8 is constructed has its grain running vertically. A top plate 9 of thin sheet-like wood is then placed on top of the ribbon 8 so as to be directly engaged with the upper edge of the ribbon and entirely supported on the ribbon. The top plate 9 is preferably of substantially the same size as the top of the carton so that when the flaps are folded down to closed position they will be engaged with and supported upon the top plate 9.

From the foregoing it will be understood that the top and bottom plates and the ribbon reinforce the carton and are in protective and load sustaining relation to the cheese since they completely enclose the cheese and relieve it of any weight or load that may be applied to the carton. Thus, when the containers are stacked, the weight of one container is transmitted to the other through the plates 9 and 7 and ribbon 8. The cheese is relieved of all load and the fiber carton will not be deformed or collapsed. Because the plates and ribbon entirely enclose the cheese and separate all portions thereof from the carton, any moisture, grease, butterfat or paraffin from the cheese will not soften or break down the carton.

The form of the invention shown in Figure 3 is identical with that just described except that the ribbon is made up of a plurality of arcuate sections designated at 8^a and 8^b. This type of sectional ribbon is especially advantageous when used with the carton construction shown in Figure 3, which has its flaps 5′ and 6′ provided at the ends instead of at the top of the carton. Only one set of flaps 5′ and 6′ are shown but usually these flaps are provided at both ends although one set may be permanently secured in closed position. As in the other embodiment of the invention, there is a bottom plate 7 and a top plate 9 between which the ribbon sections 8^a and 8^b are interposed. The ribbon sections 8^a and 8^b act exactly like the ribbon 8 and are similarly constructed and differ only in fact that they consist of sections rather than a single piece. As before, the ribbon and plates are in reinforcing relation to the carton and in load sustaining and protective relation to the cheese contained therein.

Another important advantage resides in the fact that the cartons are collapsible and when collapsed are flat. The collapsed cartons may be very compactly bundled for shipping and the plates and ribbon may also be shipped flat. This represents a real convenience and economy in connection with the shipping and yet at the place where the containers are used the cartons may be easily set up and the plates and ribbons easily and readily assembled therewith.

The invention claimed is:

1. A container for drum cheese comprising an outer fiber carton having a rectangular top and bottom and vertical sides and ends connected to each other and to the top and bottom, a rectangular bottom plate of thin sheet-like wood co-extensive with the bottom of the carton and lying flatly thereon, a ribbon of thin sheet-like wood vertically disposed within the carton with its lower edge engaging the bottom plate, said ribbon being of curved form and adapted to approximately parallel and surround the periphery of a drum of cheese set in the container and resting on said bottom plate, the upper edge of the ribbon being located above the top of the drum of cheese, and a top plate of thin sheet-like wood co-extensive with the top of the container and set on the upper edge of the ribbon and supported thereby and engaged with the underside of the top of the carton.

2. A container for drum cheese comprising an outer fiber carton having a rectangular top and bottom and vertical sides and ends connected to each other and to the top and bottom, a rectangular bottom plate of thin sheet-like wood co-extensive with the bottom of the carton and lying flatly thereon, a ribbon of thin sheet-like wood vertically disposed within the carton with its lower edge engaging the bottom plate, said ribbon being of curved form and adapted to approximately parallel and surround the periphery of a drum of cheese set in the container and resting on said bottom plate, the upper edge of the ribbon being located above the top of the drum of cheese, and a top plate of thin sheet-

like wood co-extensive with the top of the container and set on the upper edge of the ribbon and supported thereby and engaged with the underside of the top of the carton, the grain of the ribbon running vertically whereby the ribbon is adapted to coact with the plates to reinforce the carton and protect the cheese and relieve it of load when the containers are stacked.

3. A container for cheese comprising an outer fiber carton of rectangular form, a bottom plate of thin sheet-like wood corresponding in outline to and lying flatly against the bottom of the carton, a ribbon made up of a plurality of sections of thin sheet-like wood, said sections being of substantially arcuate form and being vertically disposed within the carton with their lower edges engaging the bottom plate and being arranged with respect to each other so as to be adapted to approximately parallel and surround the periphery of cheese set on the bottom plate and within the container, and a top plate of thin sheet-like wood set on the upper edges of the ribbon sections and supported thereby and engaged with the underside of the top of the carton whereby the plates and ribbon are in reinforcing relation to the carton and in load sustaining and protective relation to the cheese contained therein.

In witness whereof, I hereto affix my signature.

HERBERT E. COOLEY.