May 16, 1950 A. W. RANTANEN 2,507,814

HAND SEWING MACHINE

Filed July 11, 1947 4 Sheets-Sheet 1

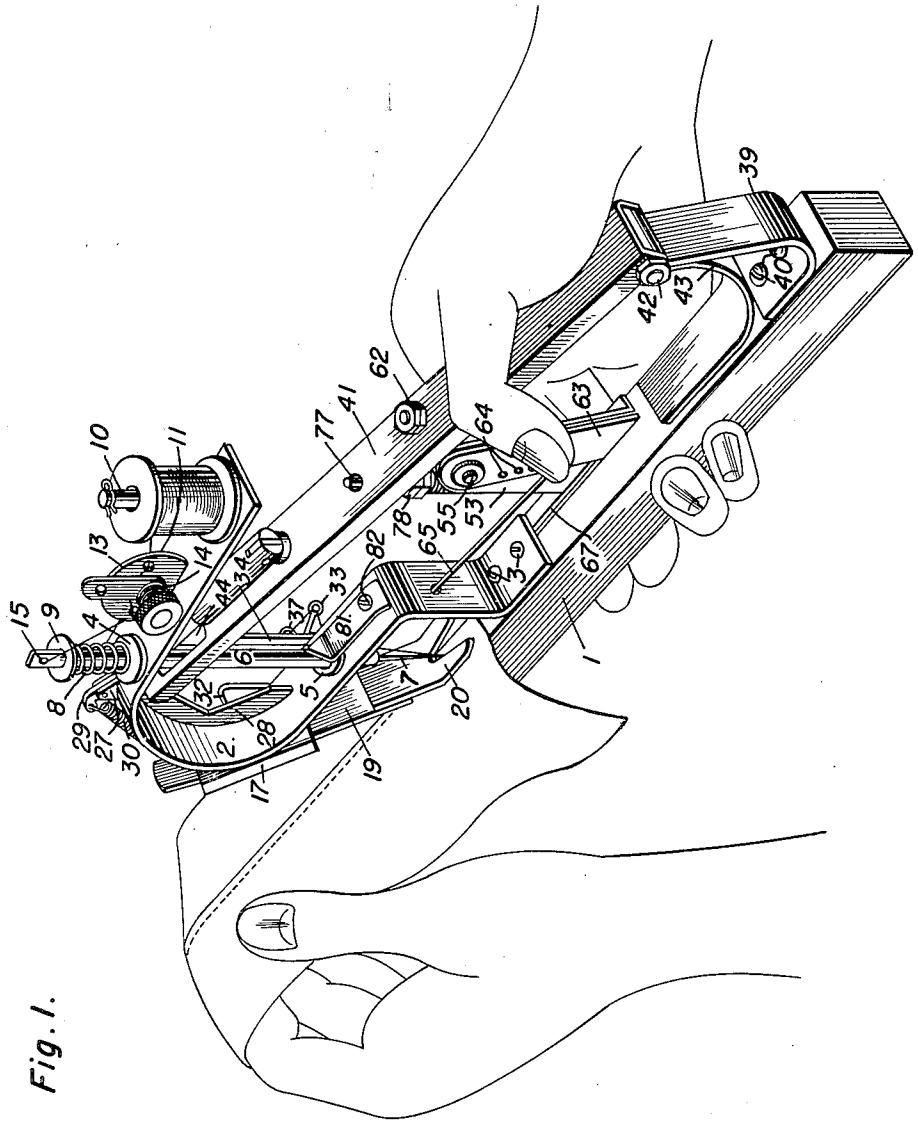

Fig. 1.

Inventor

Alfonso W. Rantanen

By Clarence A. O'Brien and Harvey B. Jacobson

Attorneys

May 16, 1950 A. W. RANTANEN 2,507,814

HAND SEWING MACHINE

Filed July 11, 1947 4 Sheets-Sheet 2

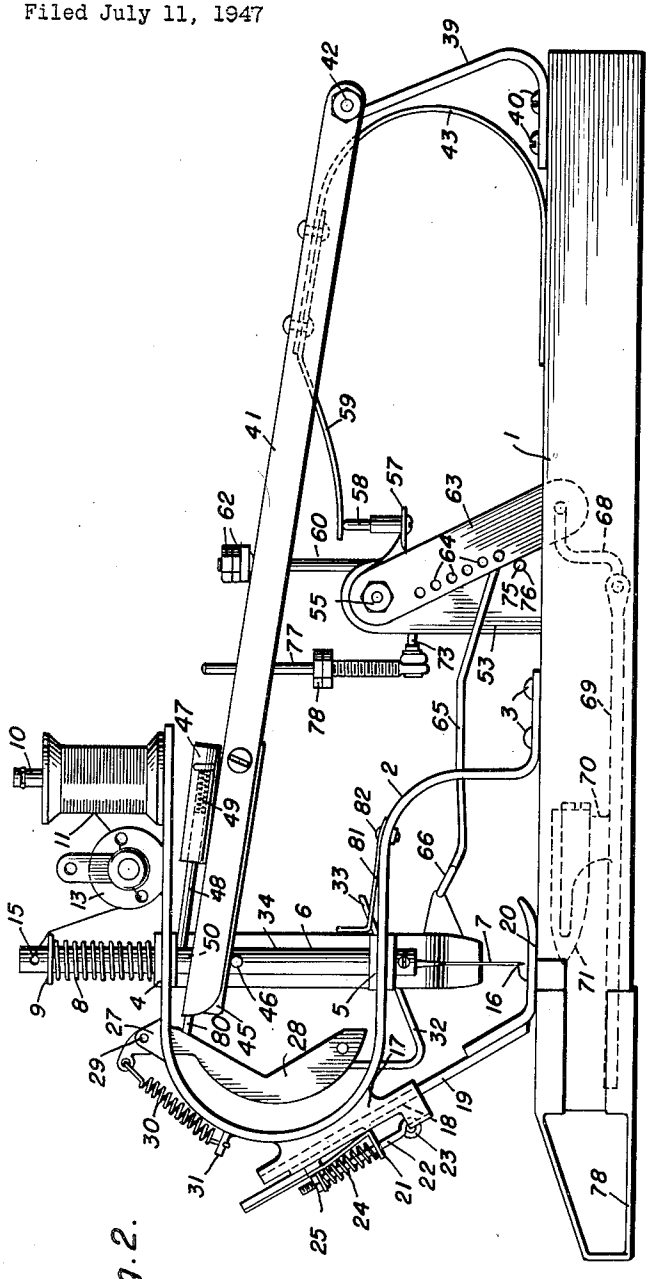

Fig. 2.

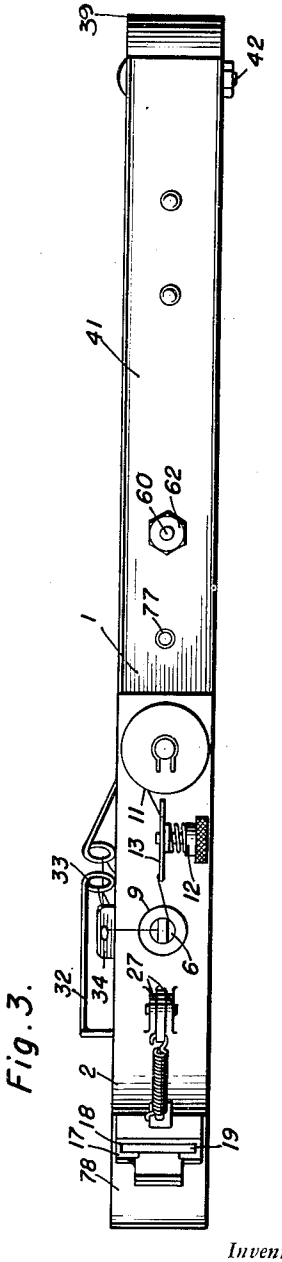

Fig. 3.

Inventor

Alfonso W. Rantanen

By Clarence A. O'Brien and Harvey B. Jacobson

Attorneys

May 16, 1950 A. W. RANTANEN 2,507,814

HAND SEWING MACHINE

Filed July 11, 1947 4 Sheets-Sheet 3

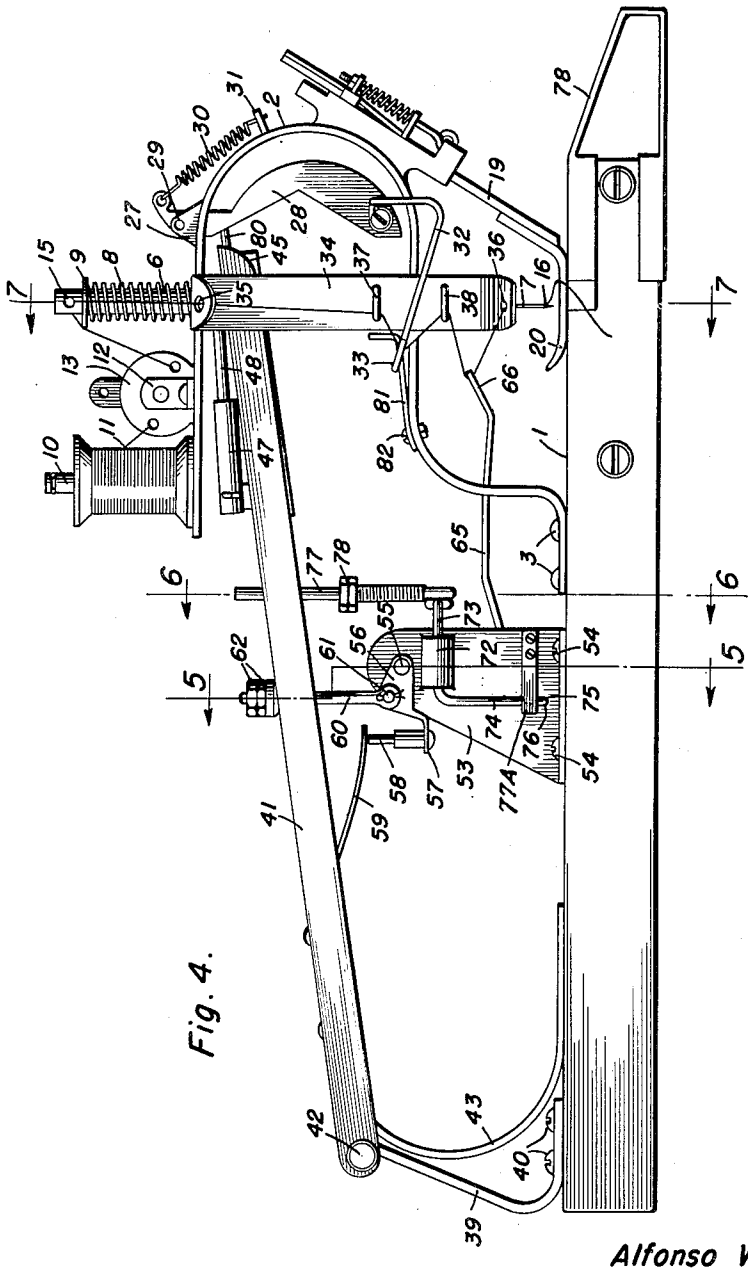

Fig. 4.

Inventor

Alfonso W. Rantanen

By Clarence A. O'Brien and Harvey B. Jacobson

Attorneys

May 16, 1950 A. W. RANTANEN 2,507,814

HAND SEWING MACHINE

Filed July 11, 1947 4 Sheets-Sheet 4

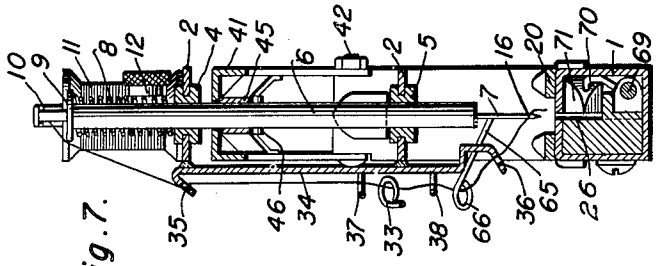

Fig. 7.

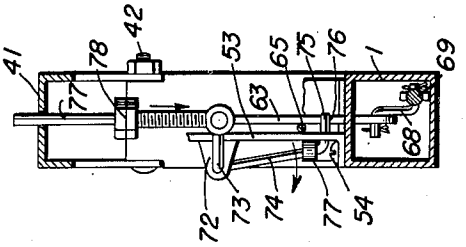

Fig. 6.

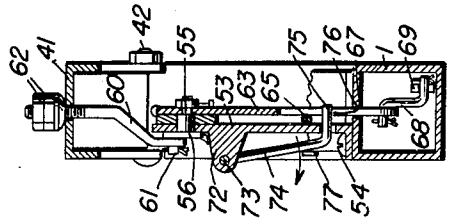

Fig. 5.

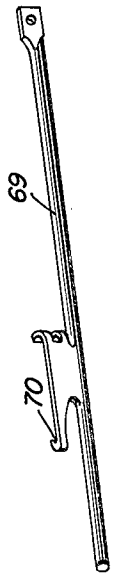

Fig. 8.

Inventor

Alfonso W. Rantanen

By Clarence O'Brien and Harvey B. Jackson

Attorneys

Patented May 16, 1950

2,507,814

UNITED STATES PATENT OFFICE

2,507,814

HAND SEWING MACHINE

Alfonso W. Rantanen, Watton, Mich.

Application July 11, 1947, Serial No. 760,405

3 Claims. (Cl. 112—169)

1

This invention relates to improvements in hand sewing machines.

An object of the invention is to provide an improved hand supported and operated sewing machine.

Another object of the invention is to provide an improved hand supported and operated sewing machine which will include a reciprocable needle and needle supporting bar and an interconnected reciprocable shuttle operable at right angles to said needle.

A further object of the invention is to provide an improved portable hand supported and operated sewing machine including a shuttle supporting base and a reciprocable needle and needle supporting bar mounted in a frame fixed to said base, and a cooperating spring tensioned needle bar engaging and operating lever pivotally supported on the end of said base remote from the needle bar.

A still further object of the invention is to provide an improved portable hand supported and operated sewing machine including a shuttle supporting base and a frame fixed thereto, together with a needle supporting bar and a needle reciprocably supported therein, with a needle bar and shuttle actuating lever pivotally supported upon said base, and resilient means for normally holding said needle bar and shuttle actuating lever in their raised or elevated position.

Another object of the invention is to provide an improved portable hand supported and operated sewing machine which will be adjustable to sew varying lengths of stitches, and which will have means for automatically feeding thread to the needle of the machine while providing means for tensioning the thread disposed between the needle supporting bar of the sewing machine and its thread supply.

A still further object of the invention is to provide an improved portable hand supported and operated sewing machine which will be highly efficent in operation, and relatively inexpensive to manufacture and produce.

Other objects will appear as the description proceeds.

In the accompanying drawings which form a part of this application:

Figure 1 is a perspective view of the improved portable hand supported and operated sewing machine showing the same in the act of sewing a piece of material;

Figure 2 is a side elevation of the improved portable hand supported and operated sewing machine;

2

Figure 3 is a top plan view of the improved hand supported and operated sewing machine with interior portions thereof being shown in dotted lines;

Figure 4 is a side elevation of the improved portable hand supported and operated sewing machine shown from the opposite side from the showing in Figure 2;

Figure 5 is a sectional view taken on the line 5—5 of Figure 4;

Figure 6 is a sectional view taken on the line 6—6 of Figure 4;

Figure 7 is a sectional view taken on the line 7—7 of Figure 4, and

Figure 8 is a perspective view of the reciprocable shuttle supporting and actuating guide rod.

Like characters of reference are used throughout the following specification and the accompanying drawings to designate corresponding parts.

In carrying out the invention, there is provided an improved portable hand supported and operated sewing machine including an elongated hollow base 1 of substantially square shape in cross section and open at one end.

A substantially U-shape frame 2 is secured intermediate the ends of the hollow base 1 to the upper surface thereof by means of the screw bolts 3, and supports the spaced vertically aligned bearing grommets 4 and 5, through which the needle bar 6 is reciprocably mounted, the same supporting the needle 7 in its lower end, and is normally held in its uppermost or raised position by means of the coil spring 8 disposed above its upper end between the upper bearing grommet 4 and the fixed washer 9 on said needle bar 6.

A spindle 10 is supported on the upper end of the frame 2 for supporting a spool of thread 11, and an L-shape bracket 12 is mounted upon the frame 2 between the spindle 10 and the needle bar 6 for rotatably supporting the apertured thread tensioning disk 13 which is resiliently tensioned by means of the coil spring 14.

The thread 11 extends from the spool to and through the apertures in the rotatable thread tensioning disk 13 and through a transverse opening 15 in the reduced upper end of the needle bar 6, and from thence downwardly through hereinafter described guide loops and apertures to be threaded through the eye 16 in the needle 7.

A bracket 17 is secured to the arcuate outer end of the frame 2 and is formed with a guide channel 18 in which the arm 19 is slidably

mounted and upon the lower end of which the presser foot 20 is fixed. A laterally extending apertured ear 21 is formed on the arm 19 and slidably receives a pin 22 which is formed with an eye 23 and anchored to the bracket 17, and a coil spring 24 is disposed about the pin 22 and is variably tensioned by the nut 25 engaging the end of the spring to hold it under the desired tension. It will be seen that the presser foot 20 is resiliently urged to contact the upper surface of the hollow base 1, which is formed with an aperture 26 through which the needle 7 vertically reciprocates.

A pair of spaced apertured bearing ears 27 are formed on the upper surface of the U-shape frame 2 and pivotally support the bell crank lever 28 upon the bearing pin 29 supported by said ears 27. A coil tensioning spring 30 is secured to the upper end of the bell crank lever 28 and has its opposite end attached to the apertured ear 31 fixed to the frame 2. A bent rod 32 is secured to the lower end of the bell crank lever 28, and is formed with an eye or loop 33 in its outer end through which the thread 11 is passed.

A U-shape thread guide plate 34 is suitably attached in a vertical position between the side edges of the loop in the frame 2, preferably by welding, and thread guiding apertures 35 and 36 are provided in the outwardly extending side arms of said plate 34. A pair of vertically spaced thread guide loops 37 and 38 are secured to the plate 34 intermediate its ends for receiving and guiding the thread 11, as clearly illustrated in Figures 4 and 7 of the drawings.

A supporting standard 39 is supported upon the rear upper surface of the hollow base 1 by means of the threaded bolts 40.

An operating lever 41 of inverted U-shape in cross section is pivotally supported upon the bearing pin 42 on the upper end of the standard 39, and extends forwardly and upwardly at an angle to cooperate with the needle supporting bar 6. A U-shape leaf spring 43 is supported by the pivoted end of the operating lever 41 and is adapted to engage the upper surface of the base 1 for normally supporting the operating lever 41 in its raised or elevated position. The forward end of said operating lever 41 is apertured at 44 adjacent its outer end for the reception of the inner end of the needle bar 6, which is slidably disposed therethrough.

A pair of spaced forwardly extending arms 45 are secured to the undersurface of the outer end of the inverted U-shape operating lever 41 and are adapted to bear on and ride along the oppositely extending ends of the bearing pin 46 disposed transversely through the central portion of the needle bar 6 for forcing the same downwardly when said lever 41 is compressed and moved on its pivot 42 toward the hollow base 1. An arm 89 is secured to the latter end of the lever 41 for engaging the lever 28 for operating the same to feed thread 11 to the needle 7.

A hollow cylindrical barrel 47 open at its outer end is supported upon the upper surface of the operating lever 41 adjacent its outer end, and supports a rod 48 for reciprocable movement, the same being resiliently tensioned or projected by means of the coil spring 49 housed within the inner end of the barrel 47. The outer end of the rod 48 is adapted to be received in a socket 50 formed in the needle bar 6, being held therein by the resilient action of the coil spring 49 which projects the rod 48 forwardly. Thus, it will be seen that while the arms 45 engage the cross bearing pin 46 to lower the needle bar 6, the rod 48 whose outer end is received in the socket 50 latches the lever 41 to the needle bar 6 so that as the needle bar is raised by the coil spring 8 disposed about the upper end of said needle bar 6 the lever will also be urged to a raised position.

A centrally disposed upstanding standard 53 is secured to the upper surface of the hollow base 1 by means of the screw bolts 54, and is transversely apertured adjacent its upper end to receive the pivot shaft 55 upon which lever 56 is fixed. The lever 56 is formed with a rearwardly extending portion 57 upon which the upstanding bearing finger 58 is rigidly mounted. A leaf spring 59 is secured to the end surface of the operating lever 41 and is adapted to resiliently seat upon the upper end of said finger 58, so that when the lever 41 is depressed, the leaf spring 59 is placed under considerable tension. An offset limiting rod 60 is secured at 61 to the lever 56 and is threaded on its upper end to extend through an aperture (not shown) in the operating lever 41, and support the adjusting nuts 62 for adjusting the limit of the upward movement of said operating lever 41.

A shuttle actuating lever 63 is fixed to the opposite end of the shaft 55 and is provided with a plurality of spaced openings 64 for selectively supporting the forwardly extending rod 65 whose forward end terminates in the loop 66 for supporting the thread 11. The lower end of the lever 63 is disposed through a longitudinal slot 67 in the upper surface of the hollow base 1, and is connected by the crank 68 with the rear end of the shuttle supporting an operating guard rod 69. The rod 69 is formed with spring fingers 70 adapted to positively support a shuttle 71 for moving the same forwardly to pass through a loop formed by the needle 7 each time the operating lever 41 is moved towards the base 1.

The bearing 72 is struck from the standard 53 and supports the crank 73 which extends downwardly as at 74 and inwardly as at 75 to pass through an opening 76 in the standard 53 to project in front of the shuttle actuating lever 63 for holding the same fixed until the lever 41 is depressed almost to its lowest position, at which time the lever 41 will move downwardly on the release rod 77 until it engages the nut 78 adjustably supported thereon, said rod 77 being secured to the upper end of said crank 73. Continued downward movement of the operating lever 41 will trip the crank 73 to retract the lower end 75 which extends through the opening 76, thereby permitting the spring 59 to snap the shuttle actuating lever 63 forwardly to shoot the shuttle through the loop of thread (not shown), and said shuttle will again be retracted to its original position as the operating lever 41 is released and moves upwardly to its normal or inactive position. The leaf spring 77A engages the end of the lower portion 75 of the crank 73 to normally and resiliently project the same into locking position in front of the shuttle actuating lever 63. A guard 79 is disposed over the front or open end of the base 1 to permit replacing of a bobbin (not shown) within the shuttle 71.

In operation, a piece of material is disposed beneath the presser foot 20 and the operating lever 41 is rapidly moved downwardly and upwardly, thereby causing the thread 11 to be automatically fed to the needle 7, and by pulling outwardly upon the piece of material under the presser foot 20, the length of the stitches may be varied at will. When the sewing has been completed

the loose ends of the thread are moved over the cutter blade 81 attached to the frame 2 by means of the screw bolt 82 to cut the same.

From the foregoing description, it will be apparent that there has been devised and provided a highly efficient form of improved hand sewing machine which will be relatively inexpensive to manufacture and produce.

While the preferred embodiment of the instant invention has been illustrated and described, it will be understood that it is not intended to limit the scope of the invention thereto, as many minor changes in detail of construction may be resorted to without departure from the spirit of the invention.

Having described the invention, what is claimed as new is:

1. A hand operated sewing machine comprising a base, a frame supported on said base, a needle bar carried by said frame for vertical, reciprocating movement, a needle carried by said needle bar, a thread supply, means for feeding thread to said needle, an operating lever pivoted at one end relative to said base for vertical swinging movement, said needle bar being moved downwardly during downward swinging movement of said operating lever, interconnecting means between said needle bar and said operating lever, and means normally urging said needle bar and said operating lever upwardly said interconnecting means including a spring urged plunger carried by said operating lever, said needle bar having a socket therein receiving said plunger.

2. The combination of claim 1 and bearing lugs projecting from diametrically opposite sides of said needle bar, and spaced arms carried by said operating lever receiving said needle bar and engaging said bearing lugs for downward movement of said needle bar during downward swinging movement of said operating lever.

3. A hand-operated sewing machine comprising a base, a frame supported on said base, a needle bar carried by said frame for vertical, reciprocating movement, a needle carried by said needle bar, a thread supply, a bell-crank lever having an upper portion pivoted to said frame for pendulus movement, a thread receiving element carried by the lower portion of said bell-crank lever, the upper portion of said bell-crank lever having a cam surface, an operating lever pivoted at its rear end to the base, the forward end of said lever being bifurcated and receiving the needle bar, the forward end of said lever extending forwardly past said needle bar, a bearing pin attached to the lever and extending forwardly of the needle bar, said bearing arm riding against said cam surface for imparting swinging movement to said bell-crank lever during movement of the lever relative to the base, a spring urged plunger carried by said lever, said needle bar having a recess therein receiving said plunger, a pair of diametrically opposed lugs projecting from said needle bar and engaging the forward bifurcated end of said lever, and spring means urging the needle bar and the lever away from the base.

ALFONSO W. RANTANEN.

REFERENCES CITED

The following references are of record in the file of this patent:

UNITED STATES PATENTS

Number	Name	Date
16,554	Pratt	Feb. 3, 1857
136,057	Gullman	Feb. 18, 1873
154,302	Van Alstine	Aug. 18, 1874
216,942	Corey	July 1, 1879
386,837	Litchfield	July 31, 1888
517,376	Brown	Mar. 27, 1894
1,009,065	Hahn et al.	Nov. 21, 1911
1,243,921	Corrall	Oct. 23, 1917
1,258,594	Miller	Mar. 5, 1918
1,591,947	Laserson	July 6, 1926
1,809,192	Cahill et al.	June 9, 1931
1,883,746	H'Doubler	Oct. 18, 1932