(No Model.)

M. FISCHHABER.

LAMP EXTINGUISHER.

No. 590,216. Patented Sept. 21, 1897.

Fig. 1.

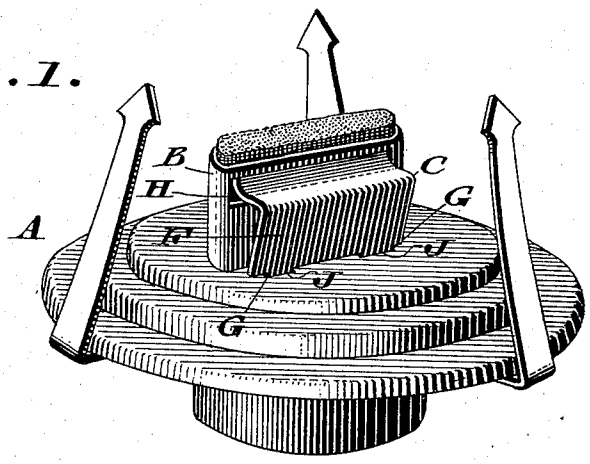

Fig. 2.

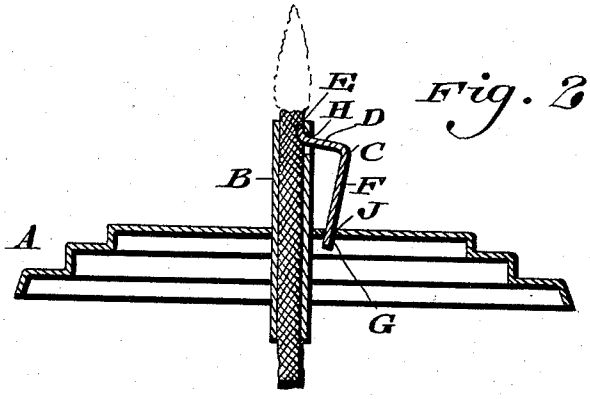

Fig. 3.

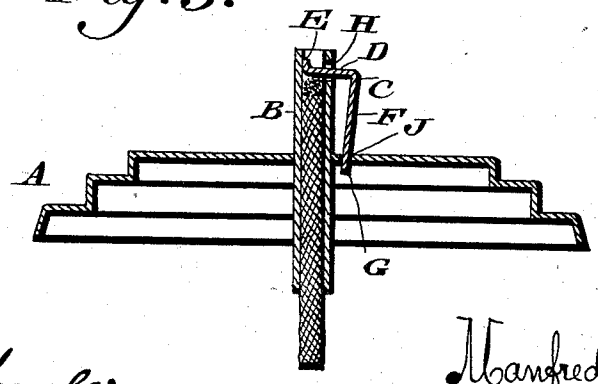

WITNESSES:

P. H. Eagles.

L. Domville.

INVENTOR

Manfred Fischhaber.

BY

Wiederhein & Fairbanks.

ATTORNEYS.

THE NORRIS PETERS CO., PHOTO-LITHO., WASHINGTON, D. C.

UNITED STATES PATENT OFFICE.

MANFRED FISCHHABER, OF PHILADELPHIA, PENNSYLVANIA.

LAMP-EXTINGUISHER.

SPECIFICATION forming part of Letters Patent No. 590,216, dated September 21, 1897.

Application filed May 4, 1897. Serial No. 635,013. (No model.)

To all whom it may concern:

Be it known that I, MANFRED FISCHHABER, a subject of the Emperor of Germany, residing in the city and county of Philadelphia, State of Pennsylvania, have invented a new and useful Improvement in Lamp-Extinguishers, which improvement is fully set forth in the following specification and accompanying drawings.

My invention consists of a novel device for automatically extinguishing a lamp when the wick is turned below the top of the tube thereof, the same being simple and inexpensive in construction and effective in operation, as will be hereinafter set forth, and pointed out in the claims that follow the specification.

Figure 1 represents a perspective view of a lamp-extinguisher embodying my invention. Figs. 2 and 3 represent vertical sections thereof, showing the extinguisher in different positions.

Similar letters of reference indicate corresponding parts in the figures.

Referring to the drawings, A designates the base-plate of a lamp-burner, and B designates the wick-tube thereof.

C designates the extinguisher, the same consisting of a bent or deflected plate somewhat of the form of an elbow, having on the upper limb D the flange E and on the bottom limb F the depending lip G.

In the side of the wick-tube toward the extinguisher, near the top thereof, is the transversely-extending slot or recess H, which is adapted to receive the upper limb D of the extinguisher C, it being noticed that the flange E occupies a position within the wick-tube and is adapted to abut against the inner side thereof, whereby the outer motion of the extinguisher is limited, as most clearly shown in Fig. 2.

In the plate A of the burner are slots or recesses J, which receive the lips G of the extinguisher, thus connecting the latter with said plate and supporting the same in operative position, it being noticed that the walls of the openings J preferably embrace the lips G, so as to impart some elasticity to the extinguisher and cause the same to press in the direction toward the wick, although practically the tendency of the extinguisher is in that direction, owing to the overhanging nature of the limb D.

It will be seen that when the wick is properly within the tube the limb D of the extinguisher bears against the side of said wick without, however, interfering with the adjustment of the same. When, however, the wick burns below the top of the wick-tube and below the limb D, the extinguisher is no longer controlled by the wick and so turns inwardly and covers the top of the wick, thus automatically and immediately extinguishing the flame and preventing the offensive smoke and smell heretofore occasioned where the wick is permitted to smoulder when well burned down.

Having thus described my invention, what I claim as new, and desire to secure by Letters Patent, is—

1. A lamp-extinguisher consisting of a lamp-burner having an opening in the base thereof, a wick-tube having a slot in the side thereof and a deflected plate having a limb passing into said slot and provided with a flange back of said slot and a limb axially held in said opening in the base.

2. A lamp-extinguisher consisting of a base with a tube thereon and provided with an opening adjacent to said base, a bent plate having a limb in a slot in the side of said tube and another limb in said opening in the base and provided with a flange or deflected end within said tube.

MANFRED FISCHHABER.

Witnesses:

JOHN A. WIEDERSHEIM,

WM. C. WIEDERSHEIM.