March 11, 1930. T. M. CHANCE ET AL 1,750,090

METHOD AND APPARATUS FOR SEPARATING MATERIALS OF DIFFERENT SPECIFIC GRAVITIES

Filed March 26, 1929 2 Sheets-Sheet 1

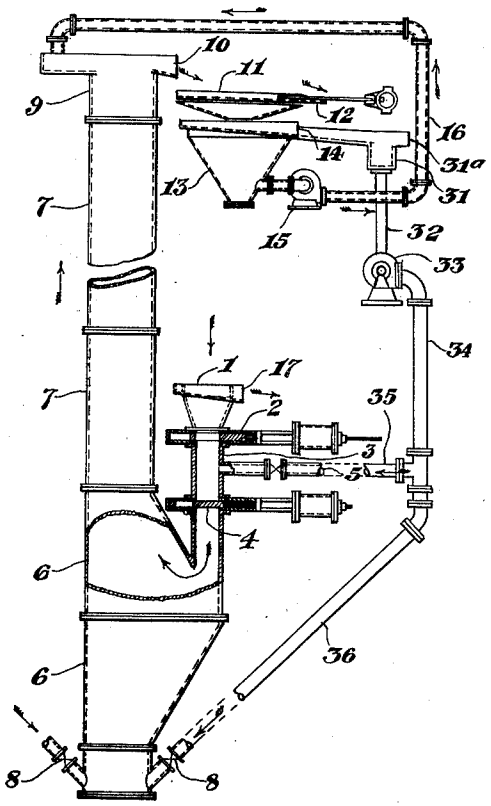

FIG. I

Witnesses:
Marcus A. Walker
H. M. Chance

Inventors
Thomas M. Chance
Harry O. Staples

March 11, 1930. T. M. CHANCE ET AL 1,750,090

METHOD AND APPARATUS FOR SEPARATING MATERIALS OF DIFFERENT SPECIFIC GRAVITIES

Filed March 26, 1929 2 Sheets-Sheet 2

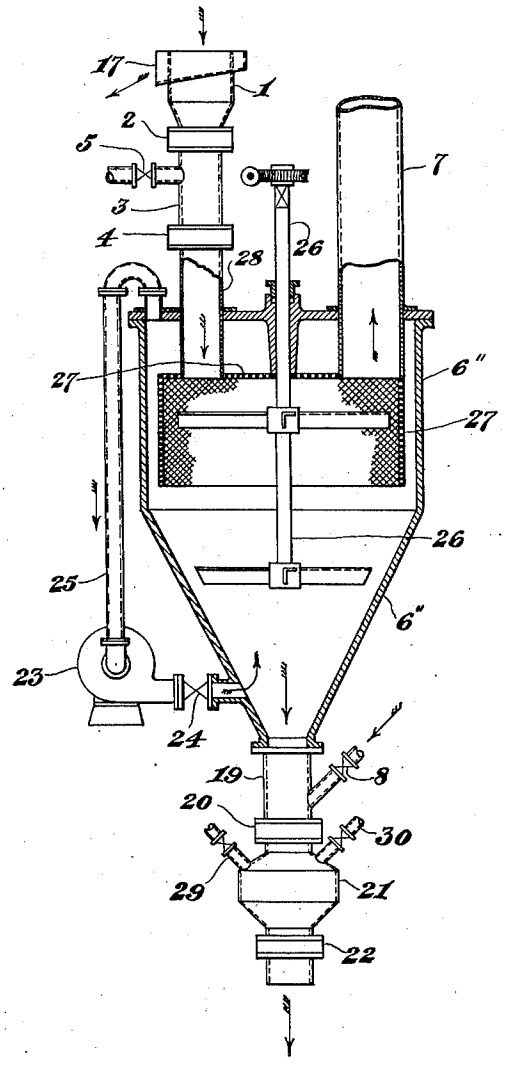

FIG. II

Witnesses:
Marcus A. Walker
H. M. Chance

Inventors
Thomas M. Chance
Harry O. Staples

Patented Mar. 11, 1930 1,750,090

UNITED STATES PATENT OFFICE

THOMAS M. CHANCE, OF MERION BOROUGH, MONTGOMERY COUNTY, AND HARRY O. STAPLES, OF SCRANTON, PENNSYLVANIA

METHOD AND APPARATUS FOR SEPARATING MATERIALS OF DIFFERENT SPECIFIC GRAVITIES

Original application filed February 25, 1928, Serial No. 256,971. Divided and this application filed March 26, 1929. Serial No. 349,995.

Our invention relates to methods and apparatus for separating materials of different specific gravities, such as coal and refuse, and of raising the products of such separations, It is especially useful in cleaning and raising coal from underground mine workings, but may also be used for raising coal through short distances as required in coal cleaning plants, industrial operations and the like.

The equipment necessary for hoisting and the cost of operating such equipment is at many collieries one of the major costs of mining. This high cost is attributable in part to the loss of time due to intermittent operation of containers holding the raw material, and corresponding increase in capital, maintenance and operative cost per ton of output produced.

To reduce this cost continuous elevating devices such as bucket elevators and inclined conveyors have been used. The latter have been used successfully at installations where the coal is raised through slopes or inclines, but experience with the former has not been so promising.

In another method to avoid intermittent hoisting, it has been proposed to transport the coal by fluid means such as a rising column of liquid or air. This involves large expenditures of power and the breakage of the coal if the latter is at all friable. Pneumatic transport has lately been successfully employed for the horizontal movement of the coal, but we do not know that either this or liquid transport has been successfully applied to the direct raising of the coal.

A further disadvantage of ordinary hoisting methods is that refuse material intermixed with the coal is usually raised therewith. This is especially important in anthracite mining because the coal as mined frequently contains 50 percent of valueless refuse. By the use of our invention the refuse can be removed underground and used for filling the voids caused by mining, while the pure coal alone can be raised to the surface.

This procedure has been proposed in German Patent No. 348,892, of October 1919, in which disclosure, the coal is roughly separated from the refuse by hydraulic classification, and the pure coal raised by an intermixed column of water and air, the vertical transport of such column being accomplished by the well-known "air-lift" principle. Said disclosure contemplates an upward velocity of the column of mixed coal, water and air, greater than the falling velocity of the largest piece of coal in the low density mixture of air and water. It is therefore evident that relatively high velocities must be used, producing more or less serious breakage of the coal.

In operating our invention the coal, devoid of the heavier impurities, is either raised by its own buoyancy, developed when said coal is introduced into a fluid mass stationary in itself, or by the aid of said buoyancy, developed when introduced into a fluid mass that is in itself moving upwardly, said fluid mass being of the general type disclosed in United States Patents 1,224,138 and 1,392,401, the introduction of coal being so effected as to preserve the physical conditions necessary to continuous operation.

By the term "fluid mass" we mean to include any mixture of comminuted solids and liquid, which when properly agitated will approach the properties and fluidity of a true liquid. Such a liquid mass may be produced by properly agitating a mixture of sand and water, the desired specific gravity of the agitated mixture being secured by proper dilution of the sand.

In carrying out our method the apparatus used may be greatly varied and the accompanying drawings are merely representative of the general association of elements necessary to the operation of said method.

In the accompanying drawings we have illustrated diagrammatically three types of apparatus to carry out our method. Fig. I is a vertical elevation and partly cross-sectional view illustrating an apparatus in which the coal alone, devoid of the heavier impurities, is raised by a substantially stationary fluid mass, Fig. II is also a vertical elevation and partly cross-sectional view showing an embodiment of our invention in which

the fluid mass transport element is combined with the refuse removing means.

In the drawings like numerals indicate like parts.

In Fig. I, feeding device 1, is connected through intake valve 2, intake chamber 3 and discharge valve 4 to connection 6. Connection 6, transport column 7 and discharge tank 9 are adapted to contain a fluid mass of the described type, maintained by hydraulic water introduced through hydraulic water connections 8. Discharge tank 9 is provided with discharge 10 in operative relation to desanding screen 11, which latter transports the recovered coal to final coal discharge 12, and discharges the removed sand and water to sand sump 13 provided with water overflow 14, sand pump 15 and sand return circuit 16.

The operation of the apparatus is as follows:

Coal, substantially freed of the heavier refuse by means of apparatus employing the method of Patent 1,224,138, or any other coal cleaning method, is introduced through feeder 1 by means of intake valve 2 into intake chamber 3. Intake valve 2 is then closed and intake valve 4 opened and said coal permitted to discharge by gravity from said intake chamber 3 into connection 6. A fluid mass of the described type, such as may be produced by agitating a mixture of sand and water, is maintained in connection 6, transport column 7 and discharge tank 9 by the agitation caused by hydraulic water introduced through connections 8. The coal discharged through valve 4 into said fluid mass rises by reason of its buoyancy and flows vertically upward into discharge tank 9, collecting in the upper portion thereof. It is removed therefrom through overflow 10 by the transport effect of a current of sand and water delivered into the upper portion of 9 by means of sand pump 15 and return circuit 16, the commingled sand, water and coal, overflowing through 10, discharging on shaking screen 11. Said screen 11 removes the sand and water from the coal, transporting the coal to final discharge 12 and returning the sand and water to sand sump 13. Said screen 11 also removes the hydraulic water introduced through connections 8, the spray water if any to be used on screen 11, and any extraneous water introduced into the circuit. All of the water so introduced, in excess of that returned by pump 15 commingled with the sand used for horizontal transport in tank 9, is separated from such commingled sand pump sand and water in sand sump 13 and passes off through water overflow 14. If mine water is used for the maintenance of the fluid mass and other purposes connected with the process, the water overflow from 14 need not be returned to the lower part of the apparatus. If however it is required to recover the water introduced through connections 8, this may be secured from overflow 14.

For each cubic foot of coal locked into the apparatus through valves 2 and 4, one cubic foot of water must be discharged from the base of the apparatus either vertically through feeder 1 or through an outside waste connection. If said water is discharged through 1, a water waste overflow 17 should be provided. The water so wasted may be returned, under suitable head, to hydraulic water connections 8.

In order to accelerate the fall of the coal from chamber 2 into connection 6 it may be desirable to employ pressure water introduced into said chamber 3 through connection 5. Such pressure water will act to agitate the fluid mass and thus reduce the quantity that must be introduced through connections 8.

Water introduced into the lower part of the apparatus, such as that through connections 8 or 5, must be under a head, or pressure, equal to that developed by the fluid mass extending vertically from the base of the apparatus to the upper part of chamber 9. If this vertical height is 100 feet and the specific gravity of the fluid mass is 1.75, the hydraulic water must be introduced under a pressure in excess of that due to a static head of 175 feet. Therefore if water overflow 14 is located 90 feet vertically above the base of the apparatus, the water recovered from overflow 14 must be placed under an additional head of at least 85 feet, by pump or other means, before introduction into the apparatus, a device by which this may be done is shown by clear water sump 31 connected to overflow 14, overflow excess clear water discharge 31^a, conduit 32 connecting to intake of pressure producing means, shown as a centrifugal pump 33 discharging into conduit 34, branch conduit 35 connecting with hydraulic valve controlled inlet 5 for hydraulic water, and conduit 36 connecting to one of the two hydraulic water valved inlets 8, the other valved inlet 8 being kept closed during such operation or be utilized for supplying water under pressure from some other source than overflow 14. It will be understood that the water from overflow 14 may be used in whole or in part or not at all for supplying any or all of the inlets 5, 8, 8, as it may be desirable to use water from some other source for this purpose. When clean make-up water is available and is required to prevent the overloading of the system with fine materials or clayey materials, such make-up water can advantageously be introduced through 5, 8 and 8.

The water displaced by the introduction of the coal, such as that discharged by overflow 17, must be returned into the body of the fluid mass because this water was displaced from the fluid mass contained in 6, 7 and 9, and

must therefore be pumped back into the circuit under the head at which the apparatus operates, a convenient method for such return being provided by pressure connection 5.

It will be understood that in this embodiment of the invention, the fluid mass is substantially stationary, and that the vertical transport of the coal is by buoyancy due to the coal being of specific gravity lower than that of the fluid mass. Thus if the average density of the coal is 1.55 and the average density of the fluid mass 1.75 then the upward movement of the coal will be effected by buoyancy due to a difference in the specific gravity of 0.20. The rising velocity of a particle of any size may be computed in the same general way that the falling velocity of such particle if 0.20 heavier in specific gravity than the fluid medium would be calculated.

Fig. II, illustrates an embodiment of our invention in which a coal cleaning unit, operating under the method of U. S. Patent Nos. 1,224,138 and 1,559,937, for the separation of refuse from coal is included as an integral part of the apparatus.

In this view only the lower part of transport column 7 is shown, the upper portion of the apparatus being constructed as shown in Fig. I, in which connection 6, uniting intake chamber 3 and valve 4 to column 7 is in this case expanded to form a coal cleaning receptacle 6″, which is provided with refuse removing means consisting of hydraulic classifier column 19, refuse valve 20, refuse chamber 21 and refuse valve 22, these portions of the apparatus functioning in the manner described in Patent 1,559,937. Hydraulic water for the agitation of the fluid mass in column 7 is introduced through hydraulic water connection 8. To secure greater area for coal separation the diameter of separating receptacle 6″ may be made greater than that of rising column 7. Therefore to produce the same specific gravity in said receptacle by hydraulic agitation, an additional quantity of hydraulic water will be required over that which can be finally utilized in column 7. For this purpose supplementary agitation pump 23 discharging through valved connection 24 to the lower portion of the separating receptacle 6″ is provided, said agitation pump drawing its supply from the upper portion of said receptacle 6″ through connection 25. This pump 23 may supply energy independently of the energy introduced by hydraulic connection 8, the discharge of said pump being equal in quantity to the amount drawn at its intake from the upper portion of receptacle 6″, the pump performing this circulatory function, the energy so delivered to the fluid mass in 6″ being regulated by throttling valve 24.

Further supplementary agitation may be provided, if desired, by rotatable agitator 26, which serves both to mechanically agitate the fluid mass in 6″ and to uniformly distribute the hydraulic water therethrough, substantially as described in U. S. Patents Nos. 1,559,937 and 1,664,876. As the entire separating receptacle 6″ is under the static head due to the height of the fluid mass in column 7, a stuffing box is shown to prevent leakage around the agitating shaft 26.

A foraminous diaphragm with dependent cylindrical skirt 27 is contained in the upper portion of receptacle 6″, from which a tubular extension 28 connects discharge valve 4 to said diaphragm, and the lower portion of column 7 is also connected to said diaphragm. Said diaphragm and cylindrical skirt form an inverted trap for the floated materials so that while the agitating current set up by pump 23 may freely rise through the openings of said diaphragm and skirt and pass into suction connection 25, the granular materials to be separated are not free to pass therethrough.

Coal with intermixed refuse intermittently introduced into feeder 1 passes through valve 2 into chamber 3 and after closure of said valve 2, and opening of valve 4, discharges through conduit 28 to the under side of diaphragm 27, said discharge being accelerated if desired by pressure water introduced through connection 5. Receptacle 6″ is filled with a fluid mass of the desired characteristics up to, or above, the horizon of said diaphragm, agitation thereof being produced by hydraulic water introduced through conduit 8, by supplementary agitation pump 23, and the rotation of mechanical agitator 26, if such agitator be used.

The coal so introduced floats in the upper part of said fluid mass, and passing under the open lower end of transport column 7, (filled with a fluid mass of like characteristics), rises therein and is transported upward by reason of its buoyancy to the upper portion thereof from whence it may be removed by the apparatus described in connection with Fig. I. The refuse, of specific gravity greater than that of the fluid mass, sinks to the lower portion of receptacle 6″ and passes through classifier column 19 intermittently operated refuse valves 20 and 22 and refuse chamber 21, to ultimate discharge exterior to the apparatus. Said refuse valves and refuse chamber, serve as a trapping device to remove the refuse through a water seal, as described in said Patent 1,559,937, said refuse chamber either discharging through a water sealed conveyor, or being refilled by the use of water connection 29 and air-vent 30, after each discharge, as described in said patent. Said patent further discloses in detail the functions of classifier column 19 in removing, by means of the hydraulic water introduced through connection 8, the greater portion of the solid component of the fluid mass from said refuse, before discharge thereof

from the apparatus so that further description is not necessary here. Portions of said fluid mass adhering to or admixed with said refuse after ultimate discharge through valve 22, may be reclaimed and returned to the separating fluid mass therefrom by the methods and apparatus of said Patents 1,224,138 and 1,559,937, the necessary provision being made for said return against the head, or pressure, before noted as existing in receptacle 6''.

As the refuse discharged into 21 displaces an equal volume of water into receptacle 6'', this being equal to that originally displaced by the introduction of the refuse into feeder 1, such displacement from feeder 1 can therefore be re-introduced by way of chamber 21, without the application of extraneous energy.

In the drawings the various adjunctive devices shown for the operation of the method are intended to represent the general association of elements necessary to such operation, but we do not limit ourselves to the use of the elements shown. It will be understood that the receptacle adapted to contain the fluid mass may be of any desired shape or form, that one or more such receptacles may be employed, and that they will preferably be vertical, although not necessarily so. While intermittent devices for feeding the materials to be raised are shown in the drawings, these are not essential to the method and continuous forms of feed may be applied by any one skilled in the art.

The means shown for the removal of the separated materials from the fluid mass are intended to be typical of elevating devices in common use. Other forms such as conveyors, scraper lines, elevating wheels, etc. may be readily used, both for the removal of the elevated materials and also for the removal of the refuse in those embodiments which include a coal cleaning unit as an integral part of the apparatus. Such removal means may be continuous, as illustrated by the sand pump overflow for the elevated coal, or they may be intermittent, such as the refuse valves shown, and in general, intermittent devices such as star wheels, plunger mechanisms, etc. may be used.

While the foregoing descriptions apply principally to the handling of coal and refuse, it will be understood that by the term "coal" we mean to include the lighter portions of the granular material constituting the feed and by the term "refuse" the heavier portion thereof, the method being adapted to the handling of heavy materials such as metallic ores, when fluid masses of proper characteristics are provided.

Any of the methods of agitation disclosed in the various patents hereinbefore noted may be used for the maintenance of the fluidic properties of the fluid mass including the use of hydraulic, pneumatic and mechanical agitation, singly or in combination that may be usefully applied. The degree of agitation is a function of the size of the grains of the solid component of the fluid mass decreasing as the size of the particles decreases, but as the elevated materials must be removed from the fluid mass, it is essential that said grains must be of sufficient size as to permit their recovery during or after such removal by gravitational or centrifugal settlement.

We do not herein claim the method or apparatus shown by Fig. II as these are claimed in an application filed February 25, 1928, Ser. No. 256,971, for Method and apparatus for separating materials of different specific gravities, of which this application is a division.

Having described our invention we claim:

1. In a method for separating materials of different specific gravities by flotation of the lighter and sinking of the heavier of said materials in a fluid medium of intermediate specific gravity, consisting of a maintained suspension of comminuted solids in liquid, said solids being heavier than said liquid and substantially insoluble therein, the improvement which consists in providing a body of said fluid medium, extending upwardly from a region adjacent to the base of said body adapted to be used as a separating zone, to a region in which it is desired to deliver said lighter materials, in restraining upward movement of said fluid medium, whereby a substantially stationary fluid medium is utilized for separating and elevating said lighter materials, in causing said lighter materials to rise by the buoyancy of said materials to the top of said fluid medium, and in removing said elevated materials from said fluid medium.

2. Apparatus for separating materials of different specific gravities, by flotation of the lighter and sinking of the heavier of said materials in a fluid medium of intermediate specific gravity being a maintained suspension of comminuted solids in liquid, said solids being heavier than said liquid and substantially insoluble therein, comprising in combination a receptacle adapted to accommodate a fluid medium of the described type, an upward extension to said receptacle, a fluid medium of the described type in said receptacle and said upward extension thereof, said upward extension ending in the region into which it is desired to deliver the lighter of said materials; means for maintaining the specific gravity of said fluid medium at the desired specific gravity; means for restraining upward movement of said fluid medium, whereby a substantially stationary fluid medium is maintained in said receptacle and the extension thereof; means for introducing materials into a region adjacent to the base of

said receptacle; means for removing lighter materials from the top of said fluid medium; means for introducing liquid under pressure into the region adjacent to the base of said receptacle, said means being provided with regulatory means for controlling the quantity of liquid under pressure, whereby tendency to upward movement of said fluid medium is restrained, and means for removing the heavier of said materials from the base of said receptacle.

3. Apparatus for separating materials of different specific gravities, by flotation of the lighter and sinking of the heavier of said materials in a fluid medium of intermediate specific gravity being a maintained suspension of comminuted solids in liquid, said solids being heavier than said liquid and substantially insoluble therein, comprising in combination a receptacle adapted to accommodate a fluid medium of the described type, an upward extension to said receptacle, a fluid medium of the described type in said receptacle and said upward extension thereof, said upward extension ending in the region into which it is desired to deliver the lighter of said materials; means for maintaining the specific gravity of said fluid medium at the desired specific gravity; means for restraining upward movement of said fluid medium, whereby a substantially stationary fluid medium is maintained in said receptacle and the extension thereof; means for introducing materials into a region adjacent to the base of said receptacle; means for removing lighter materials from the top of said fluid medium, said means comprising means for creating a flow across the top of said upward extension of a mixture of liquid and solids similar to those of said fluid medium; means for introducing liquid under control as to volume and pressure into the region adjacent to the base of said receptacle, and means for removing the heavier of said materials from the base of said receptacle.

In testimony whereof, we have set our hands, THOMAS M. CHANCE, at Philadelphia, Pennsylvania, on the 19th day of March, 1929, and HARRY O. STAPLES, at Scranton, Pennsylvania, on the 20th day of March, 1929.

THOMAS M. CHANCE.
HARRY O. STAPLES.