M. C. HOPKINS.

MOVING PICTURE APPARATUS.

APPLICATION FILED JULY 15, 1912.

1,204,771.

Patented Nov. 14, 1916.

5 SHEETS—SHEET 1.

Fig. I.

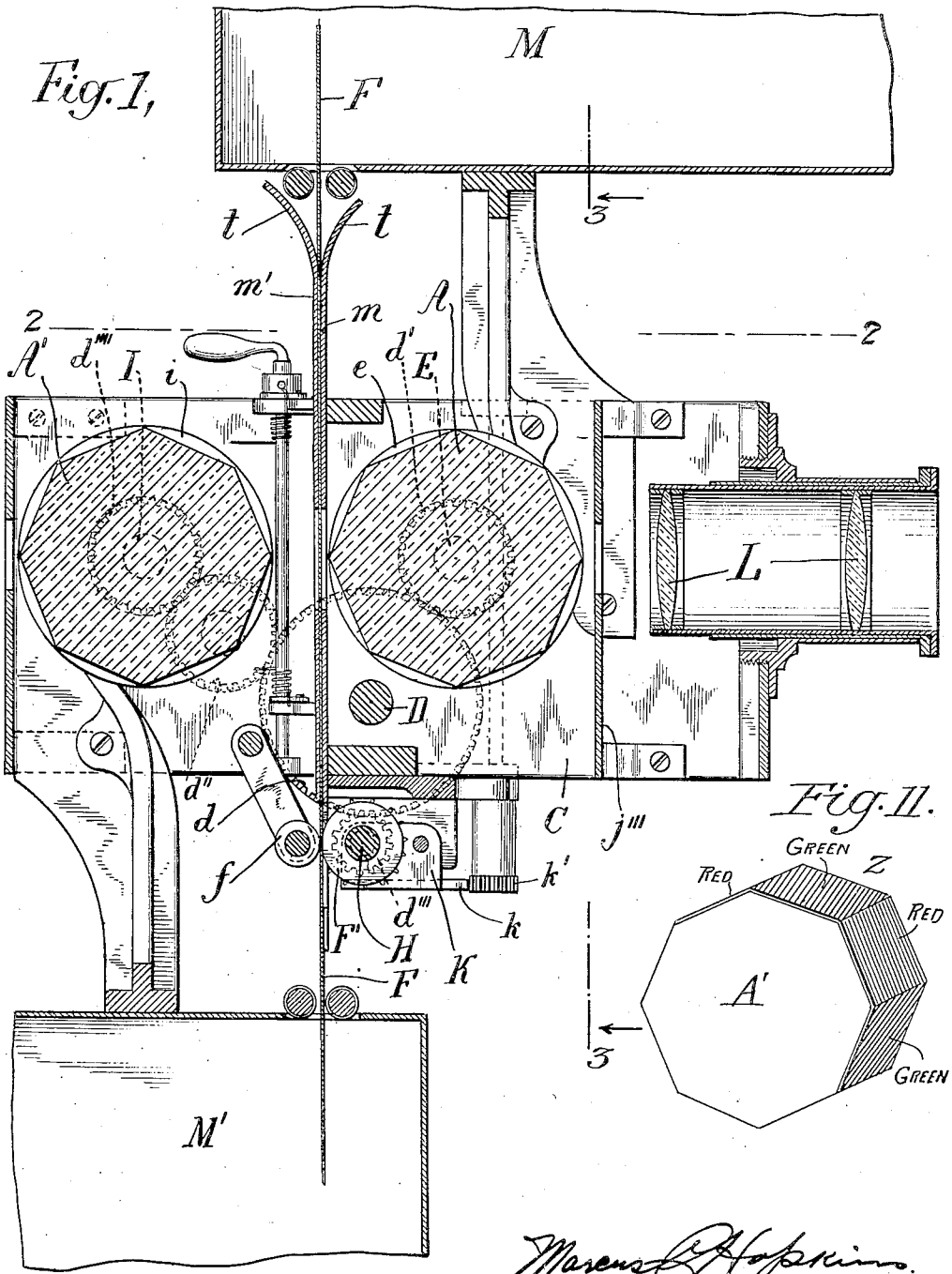

Fig. II.

Witnesses:

J. E. Hoeggerath

Leon A. Rosenthal

Marcus C. Hopkins.

Inventor;

By Attorneys

Lemmie, Davis & Goldsborough

M. C. HOPKINS.

MOVING PICTURE APPARATUS.

APPLICATION FILED JULY 15, 1912.

1,204,771.

Patented Nov. 14, 1916.

5 SHEETS—SHEET 2.

Fig. 2,

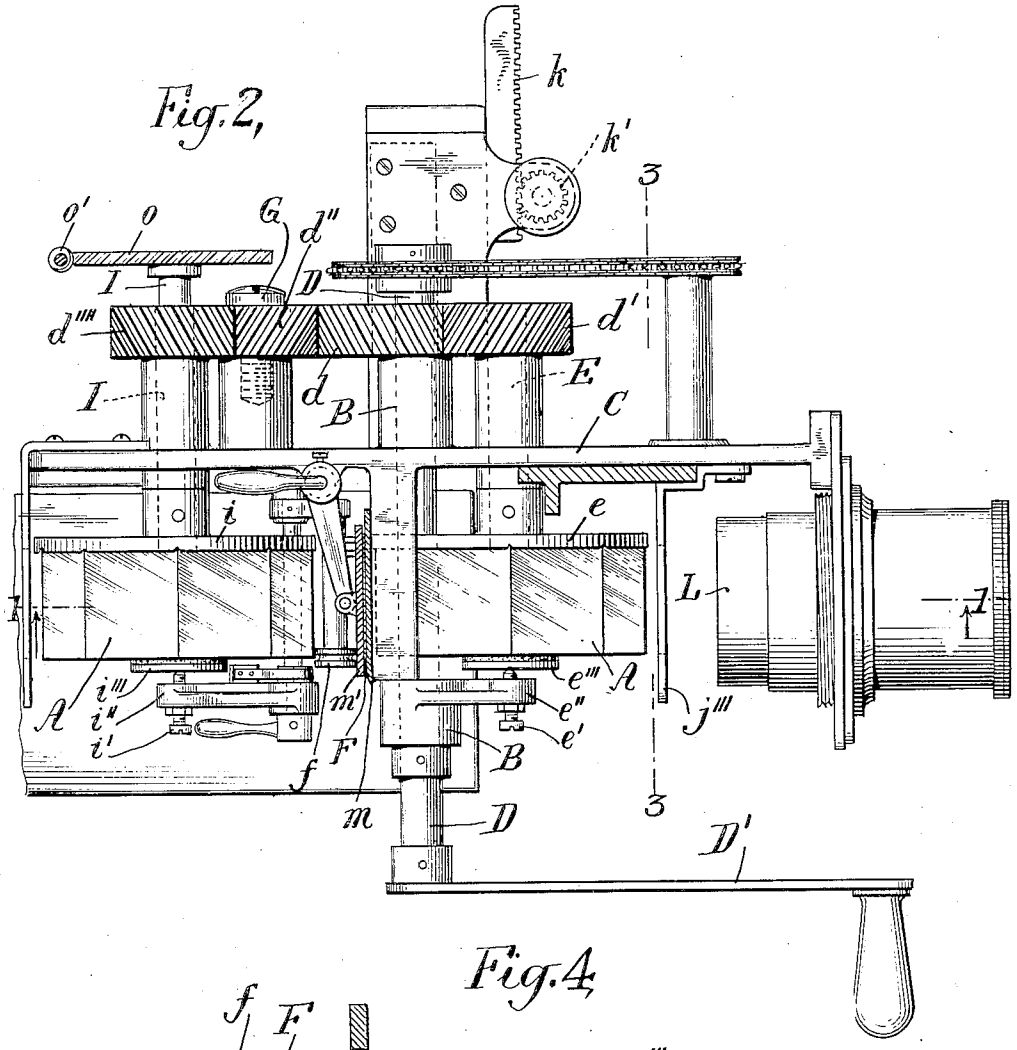

Fig. 4

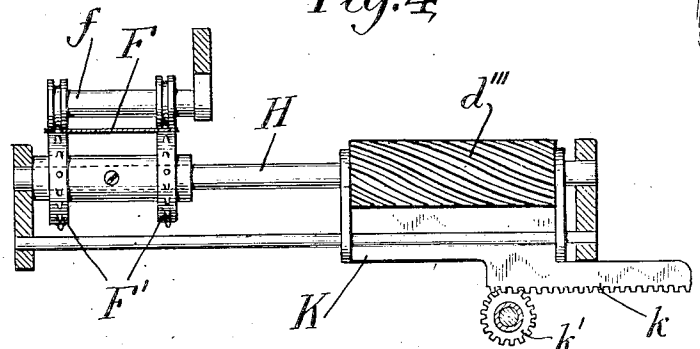

Marcus C. Hopkins
Inventor

Witnesses:
J. E. Hoeggerath
Leon N. Rosenthal

By Attorneys
Fennie, Davis & Goldsborough.

M. C. HOPKINS.

MOVING PICTURE APPARATUS.

APPLICATION FILED JULY 15, 1912.

1,204,771.

Patented Nov. 14, 1916.

5 SHEETS—SHEET 3.

Fig. 3.

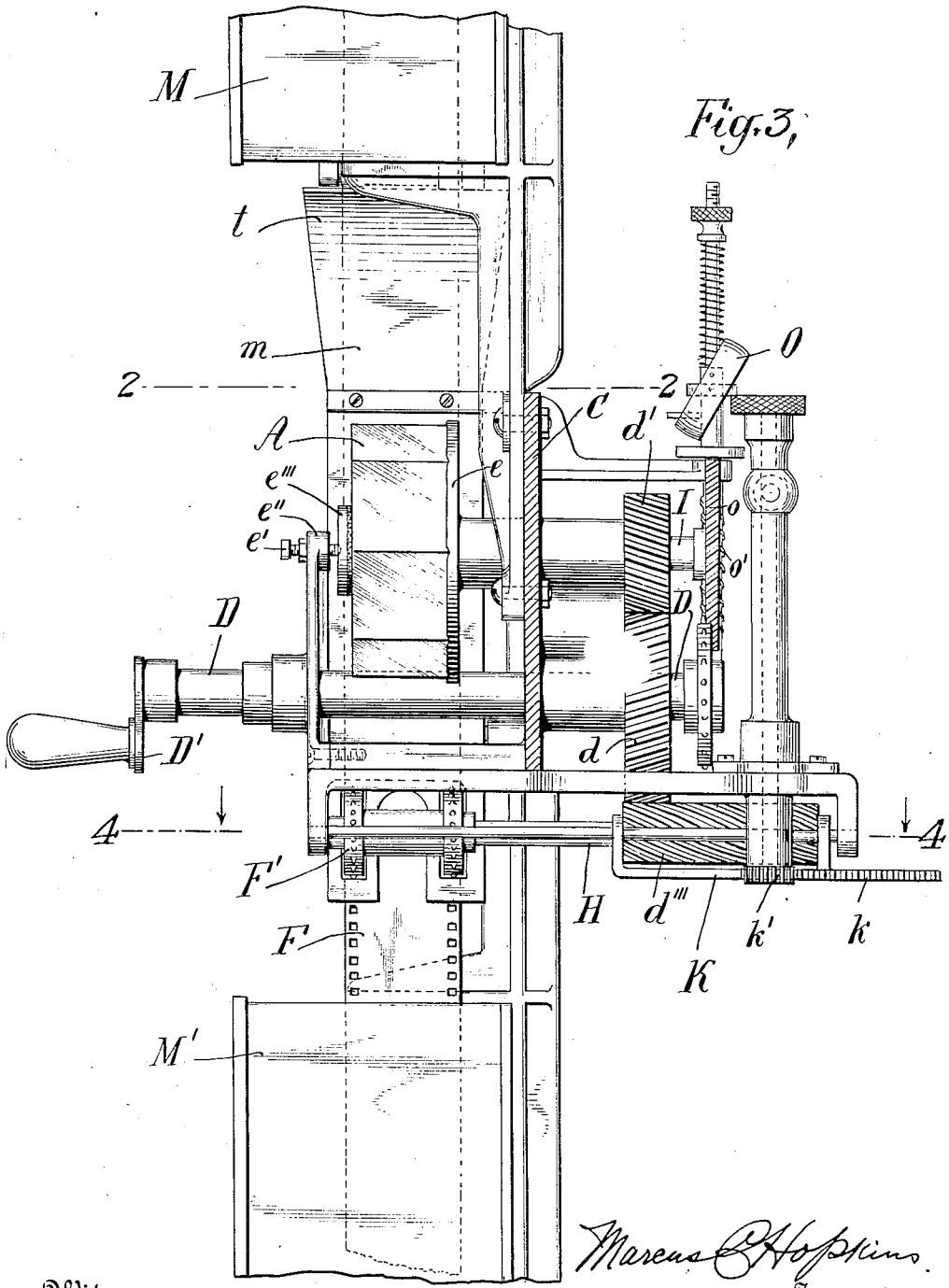

Witnesses:

J. E. Waggerath.

Leon N. Rosenthal

Marcus C. Hopkins.

Inventor

By Attorneys

Fennie, Davis & Goldsborough

M. C. HOPKINS.

MOVING PICTURE APPARATUS.

APPLICATION FILED JULY 15, 1912.

1,204,771. Patented Nov. 14, 1916.

5 SHEETS—SHEET 4.

Fig. 5,

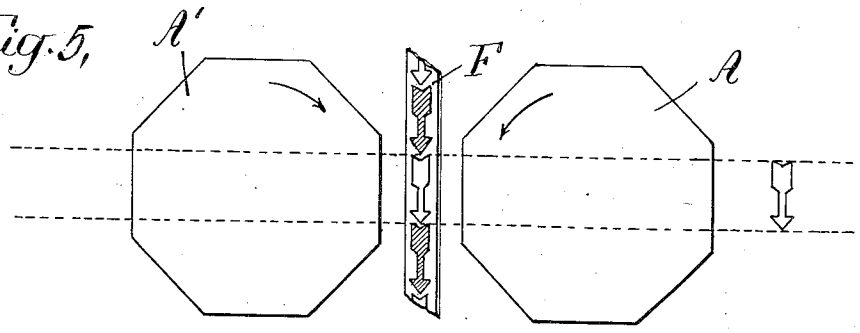

Fig. 6.

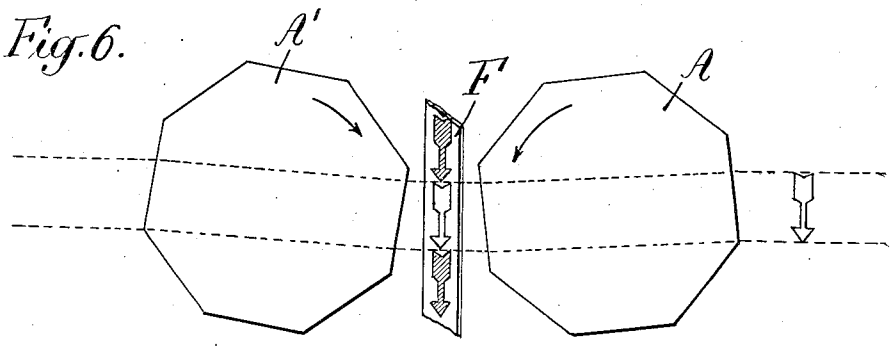

Fig. 7.

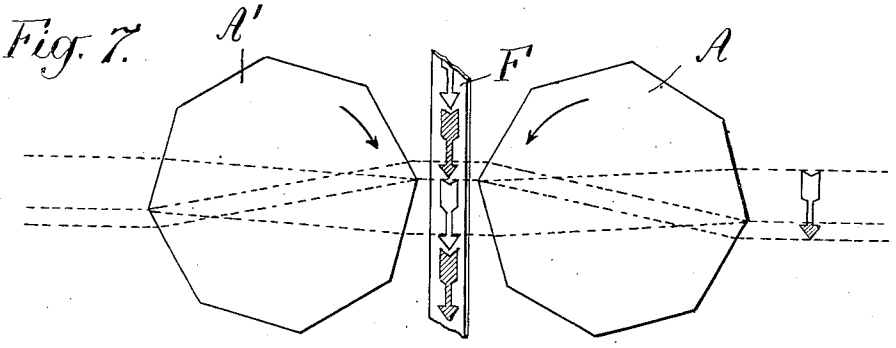

Fig. 8.

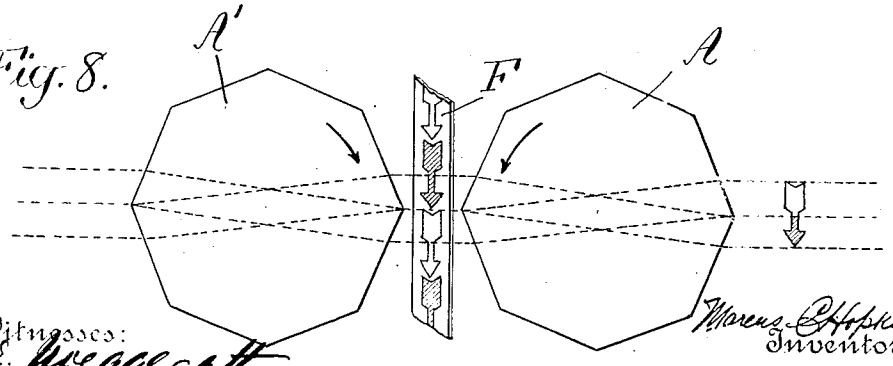

Witnesses:

J. E. Weggerath.

Tom N. Rosenthal

Marcus C. Hopkins
Inventor

By Attorneys

Pennie, Davis & Goldsborough

M. C. HOPKINS.
MOVING PICTURE APPARATUS.
APPLICATION FILED JULY 15, 1912.

1,204,771.

Patented Nov. 14, 1916.
5 SHEETS—SHEET 5.

Fig. 9.

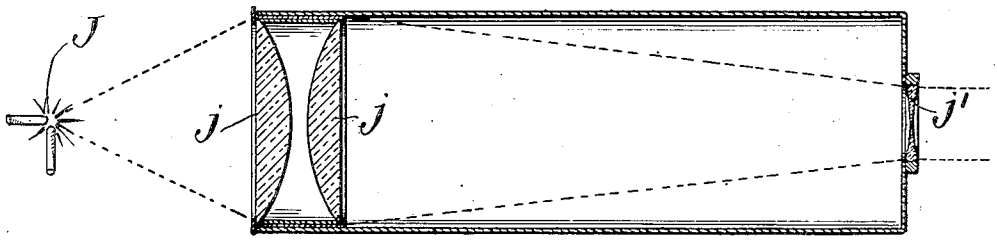

Fig. 10.

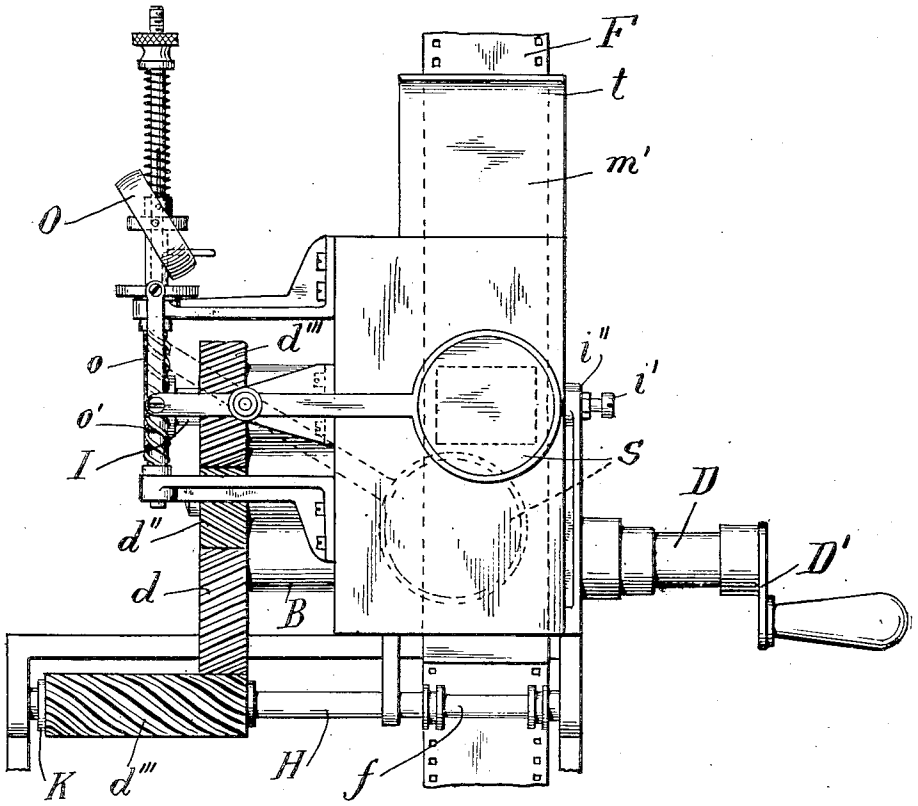

Witnesses:
J. E. Hoeggerath.
Leon A. Rosenthal

Marcus C. Hopkins.
Inventor

By Attorneys
Fennie, Davis & Goldsborough

UNITED STATES PATENT OFFICE.

MARCUS C. HOPKINS, OF JERSEY CITY, NEW JERSEY.

MOVING-PICTURE APPARATUS.

1,204,771. Specification of Letters Patent. Patented Nov. 14, 1916.

Application filed July 15, 1912. Serial No. 709,546.

To all whom it may concern:

Be it known that I, MARCUS C. HOPKINS, a citizen of the United States, residing at No. 101 Sip avenue, Jersey City, county of Hudson, and State of New Jersey, have invented certain new and useful Improvements in Moving-Picture Apparatus; and I do hereby declare the following to be a full, clear, and exact description of the invention, such as will enable others skilled in the art to which it appertains to make and use the same.

The invention is directed to the production of apparatus whereby moving pictures may be projected upon a screen from a continuously and uniformly moving film without an interception of the projecting light by a shutter or like device, and whereby a complete and uniformly illuminated picture may at all times be presented upon the screen.

The invention also contemplates such an arrangement of the apparatus that the maximum amount of available light is constantly utilized for the illumination of the projected picture.

My improvement is directed to the perfection of apparatus of the kind proposed in British Patent No. 7650 of 1901 granted to A. V. E. Daubresse wherein a polygonal transparent body is rotated between the moving film and the objective of the projection lantern, but unlike the apparatus shown and described in said patent, I employ only light which is substantially parallel and combine with the rotating polygonal body means whereby the light rays are rendered substantially parallel before passing through the moving film and rotating body. This departure from the method of operation described and apparatus shown by Daubresse has made it possible to project at all positions of the film and rotating polygonal body a complete uniformly illuminated picture upon the screen which eliminates what is commonly known as the flicker in shutter machines, which flicker is still present throughout the top and bottom portions of the picture obtained in the manner described by Daubresse.

The several features of the invention are hereinafter specifically pointed out in connection with the description of the appended drawings which illustrate embodiments thereof in apparatus designed for actual use in the production of uniformly and continuously illuminated moving pictures.

In the drawings, Figure 1 is a section in elevation on line 1—1 of Fig. 2, of an embodiment of the invention in which two polygonal refracting bodies of low refractive index are employed to produce a continuous uniformly illuminated picture and utilize all of the available light for projection. Fig. 2 is a horizontal section of the same machine taken on line 2—2 of Figs. 1 and 3. Fig. 3 is a cross-section taken on lines 3—3 of Figs. 1 and 2. Fig. 4 is a detail of the film feeding sprocket and its adjustable framing gear employed in the machine. Figs. 5 to 8 inclusive, are diagrammatic elevations illustrating the direction taken by the projected light in passing through the refracting bodies of the machine. Fig. 9 is a diagrammatic view of the condenser system and paralleling lens employed. Fig. 10 is a cross-section showing the emergency shutter mechanism and Fig. 11 is a detail showing one arrangement of the color films on the faces of the polygonal refracting body interposed between the condenser and the picture film.

The illustrated embodiment of the invention shows the use of two refracting bodies made of a medium having a comparatively low refractive index, such as ordinary low index optical glass, the peripheral planes of the refracting bodies being longer than the distance between like points in adjacent pictures upon the picture films when the proper correlation of the refractive index, the size of the refracting body and the film is brought about. The use of a refracting body of such a size introduces a problem into the arrangement of the device in that there will be a considerable period during which a face of the refracting body will present an unbroken picture to the objective, which would ordinarily require a field of projecting light being passed through one complete picture on the film during this period and would necessitate a field of light having a diameter equal to the height of the picture plus the distance traveled by the film during this time. If then the area of the field of light were sufficient to supply illumination during this movement of the picture, the preceding and following pictures would, during a portion of the time, be also illumi-

nated and would present to the objective lens, an overlapping of light throughout portions of the projected picture which would destroy the uniformity of its illumination. A moving shutter having an aperture equal to the area of the picture would prevent this overlap, but such an arrangement would waste light.

I have overcome the difficulties incident to the employment of a refracting body of low refractive index by causing the light to be deflected upon the correct parts of the picture, and have accomplished this by utilizing two of the refracting bodies as shown in the preferred embodiment of the invention illustrated in the drawings.

Referring to Figs. 1, 2, 3 and 4, a driving shaft D is mounted in bearings B in a cast frame C and is revolved by a crank D'. A large gear d fast on that end of the driving shaft D opposite the crank D' meshes with and drives a gear d' fast on a shaft E, an idler gear d'' running on a stud G and a wide-faced gear d''' splined to and longitudinally movable upon a feed-sprocket shaft H. The idler gear d'' meshes and drives a gear d'''' fast on a shaft I. All of the gears are spiral toothed spur gears and run noiselessly and smoothly and, owing to this spiral cut of the teeth, the longitudinal movement of the wide-faced gear d''' on the splined feed-sprocket shaft H will change the angular relation of the shaft H to the other gears of the train. The large gear d drives the gears d' and d'''' at double and the gear d''' at four times its own speed. The shafts E and I rotate in opposite directions and are provided with similar octagonally recessed face plates e and i in which are respectively seated the octagonal glass drums A and A'. The glass drums A and A' are held in their respective face plates by pointed screws e' and i' which are threaded in brackets e'' and i'' on the casting C and bear against centered disks e''' and i''' which in turn press against soft rubber disks e'''' and i'''' next to the drums and retain them in the face plates. The glass drums A and A' are set in such relative positions that their faces will be parallel when opposite and their axes will be intercepted by the optical axis of the condenser system and the objective lens.

A film sprocket F' is mounted fast on the shaft H and it will be seen that this sprocket will feed the film between the refracting bodies A and A' at a speed which will present one picture to each face of these bodies. As there are usually four perforations for each picture in the film and it is not likely that the film will always be engaged with the sprocket in a correct position to frame, the wide-faced gear d''' is embraced by a yoke K, provided with a rack k meshing with a pinion k' which may be turned to move the spiral toothed wide-faced gear d''' longitudinally on the splined shaft H, changing the relative positions of the sprocket and refracting bodies and accurately framing the picture.

The film F is led from a magazine M downwardly between the refracting bodies next to an apertured guide m against which it is pressed by a spring pressed door m'. It is engaged by the sprocket F' against which it is pressed by a withdrawable spring pressed idler f and then enters the lower magazine M', the spindle of which is intended to be driven from shaft D by a chain through the usual yielding friction clutch.

A governor O driven by spiral gearing o, o' from the shaft I moves a dispersive emergency shutter S out of the path of the light when the machine is running. This shutter is preferably made of opal glass or other like translucent material which disperses the light and prevents its concentration on the film, while it still allows the mechanism to be illuminated to facilitate the adjustment of the film. A dispersing lens may be used in the shutter in place of the opal glass. While the emergency shutter effectually prevents the ignition of the film by dispersing the concentrated rays when working properly, I have provided flaring tops t, t upon the door m' and the guide m which will deflect the flame from a burning position of the film in the projecting aperture and prevent the ignition of the film above the door.

The light of an arc lamp, such as is shown at J in Fig. 9, may be passed through a pair of condensers j, j and converged upon a small double-concave lens j' which is of just sufficient diameter to take in the full area of one of the pictures upon the film F and of the proper curvature to render the light substantially parallel uniformly throughout the field. A diaphragm j'' having an aperture equal to the size of the picture upon the film is interposed in the path of the parallel rays after they leave the lens j' and cuts off the light outside of the rectangle of the picture preventing overlapping of the light through two pictures. The condensers j, j and lens j' should preferably form an achromatic system which should also be corrected for spherical aberration, but as a fair result can be obtained with uncorrected lenses and corrected systems are well known it has been deemed sufficient to merely indicate the arrangement in a more or less diagrammatic manner.

I prefer to place a diaphragm j''' having an aperture of the area of the picture on the film, between the refracting body A and the objective lens L in order to intercept any reflected or stray light which might otherwise reach the objective.

In the arrangement shown in Fig. 9 the light from the arc lamp or other source is directed upon comparatively large condensers which can be placed at a safe distance from the lamp and is, by these condensers converged upon a paralleling lens j' within an area sufficiently small to conserve all of the light possible within a rectangle of the size of a picture on the film. Were it practicable to place a small condenser, say of the size of the lens j' close enough to the lamp to receive the same amount of light received by a larger condenser farther away, such a condenser could be made to produce substantially parallel light and the lens j' could be dispensed with. However, the heat from the lamp is so great with even half of the current values usually employed that there would be great danger of breaking such a small condenser so placed, and the apparatus of Fig. 9 is preferred.

Referring to Figs. 5 to 8, which are diagrammatic views of four positions which the film and refracting bodies assume, I have shown arrows upon the film, each arrow representing one picture and alternate arrows being hatched to distinguish them from the adjacent unhatched arrows. It will be clearly seen in what manner the parallel light rays pass through the refracting bodies in the film, the course of these light rays being indicated by dotted lines. At the right beyond the refracting body arrows are shown representing the picture as they are presented to the objective lens, and it will be seen that in Figs. 5 and 6, though the film has moved between these positions the picture presented to the objective lens is the same and represented by a complete unhatched arrow. In Figs. 7 and 8, the light passes through portions of two arrows representing two pictures and it will be seen that the arrow presented to the objective lens in this case is made up of the tail of the unhatched arrow and the head of the succeeding hatched arrow. In Fig. 8 equal parts of the unhatched and succeeding hatched arrow make up the stationary image presented to the projective lens.

When it is desired to project pictures in color, where the film consists of a series of pictures, the adjacent pictures of which series have been taken through color screens, and, therefore, represent the appropriate distribution of color in the to be projected picture, I provide alternate faces of the polygonal refracting body which is interposed between the condenser system and the film with a colored film z, as shown in Fig. 11, which may be applied in any suitable manner so that a picture on the film requiring illumination by light of one color will receive light of that color through two opposite sides of the refracting body provided with a film suitably colored to produce the proper illumination, while another picture requiring another color will receive light of the proper color from another pair of opposite sides of the refracting body. When but two colors are used the colors are alternated on the faces of the refracting body, but when three colors are used a refracting body having a number of sides, which is a multiple of six, must be used.

It is only necessary that one of a pair of opposite sides of the polygonal body be provided with a color film, and, therefore, but half of the sides of one polygonal body need be so colored to produce the desired result.

Having thus described my invention, what I claim is:

1. In moving picture apparatus, the combination with a film feed of two oppositely rotating transparent polygonal refracting bodies each having an even number of faces and disposed upon opposite sides of the film; substantially as described.

2. In moving picture apparatus, the combination with a film feed of two oppositely rotating transparent polygonal refracting bodies each having an even number of faces and disposed upon opposite sides of the film and means for passing a uniform field of substantially parallel light through one of said bodies, then through the moving film and then through the other of said bodies; substantially as described.

3. In moving picture apparatus, the combination with a uniform field of parallel light, a moving picture film fed through said field, and a polygonal refracting body rotating in the path of said field of light through which body said light passes before reaching said film; substantially as described.

4. In moving picture apparatus the combination with a stationary source of light, a moving film, means for moving the field of light emanating from the source and falling upon the film in correspondence with the movement of the film to maintain a fixed relation between the film and the light rays illuminating it during movement of the film.

5. In moving picture apparatus, the combination with a film feed, of two oppositely rotating transparent polygonal refracting bodies, each having an even number of faces and disposed upon opposite sides of the film, and means for passing light through one of said bodies, then through the moving film, and then through the other of said bodies, substantially as, and for the purpose set forth.

6. In moving picture apparatus, the combination with a film and a feed therefor, of a polygonal refracting body mounted to rotate in accordance with the movement of said film, and means for presenting a moving field of light to said film in such man-

ner that supplemental parts of pictures on the film will be illuminated by the same portions of the field of light during the movement of said film substantially as described.

7. In moving picture apparatus, the combination with a film and a feed therefor, of a polygonal refracting body mounted to rotate in accordance with the movement of said film, and means for translating a field of substantially parallel light directed upon said film in such manner that supplemental parts of pictures on the film will be illuminated by the same portions of the field of light during the movement of the film substantially as described.

8. In moving picture apparatus, the combination with a film and a feed therefor, of a polygonal refracting body mounted to rotate in accordance with the movement of said film, and means for deflecting a field of light through said film; substantially as described.

9. In moving picture apparatus, the combination of a stationary objective lens, a stationary source of substantially parallel light producing a uniform field of light directed to said objective lens, a moving picture film intercepting said field of parallel light, a continuous feed for said film, a transparent polygonal refracting body interposed between said film and said objective lens, a second transparent polygonal refracting body interposed between said film and said source of light, and gearing adapted to rotate said polygonal bodies in opposite directions and effect the feed of said film, the speed of the film and the dimensions and refractive index of the said bodies being so correlated as to effect the projection of a fixed moving picture from the continuously moving film; substantially as described.

10. In moving picture apparatus, the combination with a continuously moving film, of light refracting bodies oppositely rotated upon opposite sides of the film and through which and the film the light is passed; substantially as described.

11. In moving picture apparatus, a moving film, a source of light and a polygonal refracting body disposed between said source of light and said film and arranged to rotate in accordance with the movement of said film, certain peripheral faces of said body being provided with color screens to present colored light to said moving film.

In testimony whereof I affix my signature, in presence of two witnesses.

MARCUS C. HOPKINS.

Witnesses:
J. E. NOEGGERATT,
LEON W. ROSENTHAL.