US00D548538S

(12) United States Design Patent

Liu

(10) Patent No.: US D548,538 S
(45) Date of Patent: ** Aug. 14, 2007

(54) **COVERED FOOD CONTAINER**

(75) Inventor: **Anita Suk Ping Liu**, Orlando, FL (US)

(73) Assignee: **Dart Industries Inc.**, Orlando, FL (US)

(**) Term: **14 Years**

(21) Appl. No.: **29/258,800**

(22) Filed: **Apr. 27, 2006**

(51) **LOC (8) Cl.** **07-07**
(52) **U.S. Cl.** **D7/629**; D9/432
(58) **Field of Classification Search** D7/602, D7/628, 629, 612–615, 538–542; D21/499, D21/500; D9/424–432; 229/902–906; 220/4.21, 220/360, 366, 574, 780–806, 912, 913
See application file for complete search history.

(56) **References Cited**

U.S. PATENT DOCUMENTS

4,351,164 A * 9/1982 Christiani 220/23.83
4,545,487 A * 10/1985 Asmus 220/4.21
D333,615 S * 3/1993 Zutler D9/423
D333,978 S * 3/1993 Zutler D9/424
D336,613 S * 6/1993 Zutler D9/423
D356,255 S * 3/1995 Syrek D9/424
D482,928 S 12/2003 Liu
D482,934 S 12/2003 Liu
D483,232 S 12/2003 Liu

* cited by examiner

Primary Examiner—Terry A. Wallace
(74) *Attorney, Agent, or Firm*—John A. Doninger

(57) **CLAIM**

The ornamental design for a covered food container, as shown and described.

DESCRIPTION

FIG. **1** is a top, right side and front perspective view of a covered food container showing the new design;
FIG. **2** is a front elevation view thereof;
FIG. **3** is a rear elevation view thereof;
FIG. **4** is a right side elevation view thereof;
FIG. **5** is a left side elevation view thereof;
FIG. **6** is a top plan view thereof; and,
FIG. **7** is a bottom plan view thereof.

1 Claim, 4 Drawing Sheets

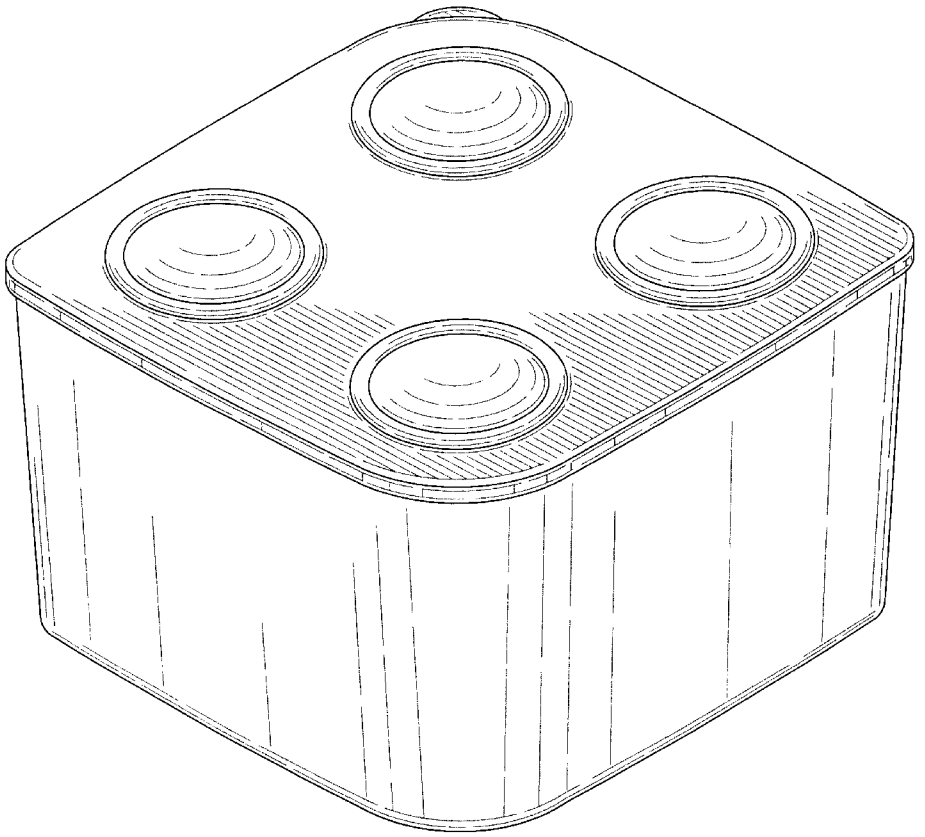

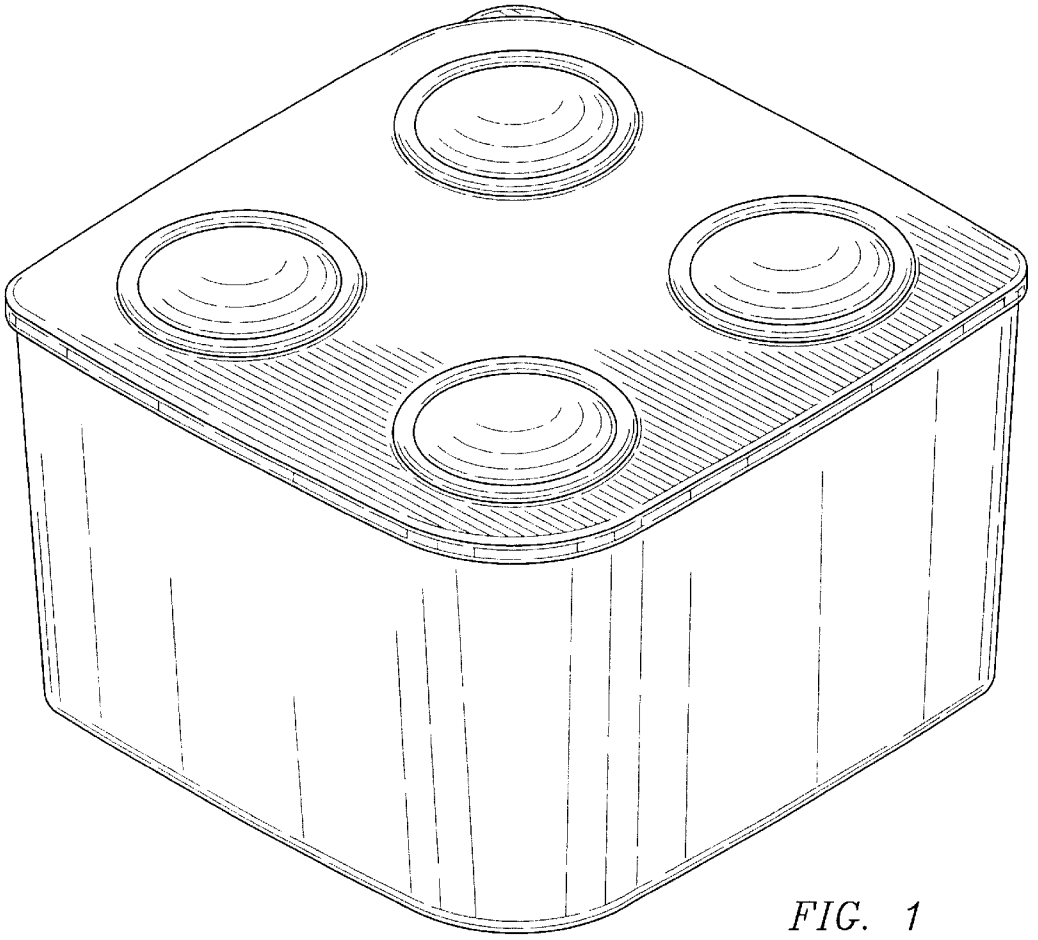

FIG. 1

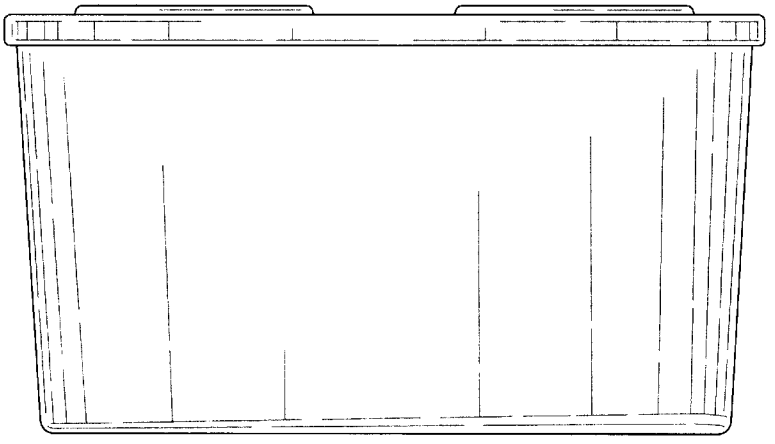

FIG. 2

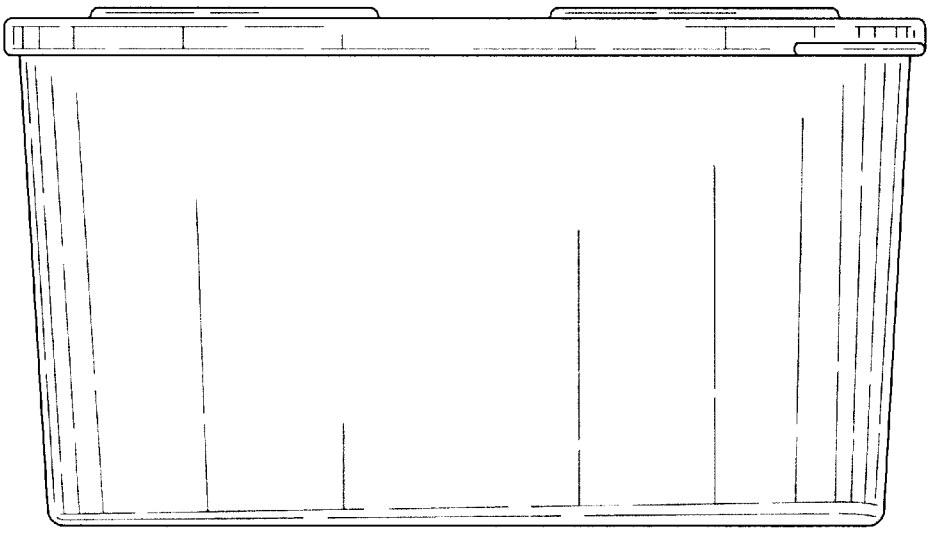

FIG. 3

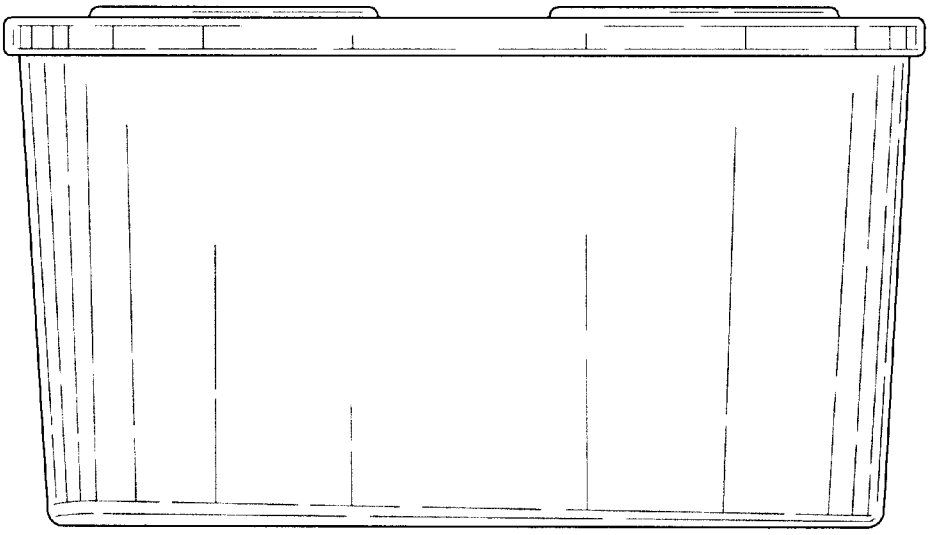

FIG. 4

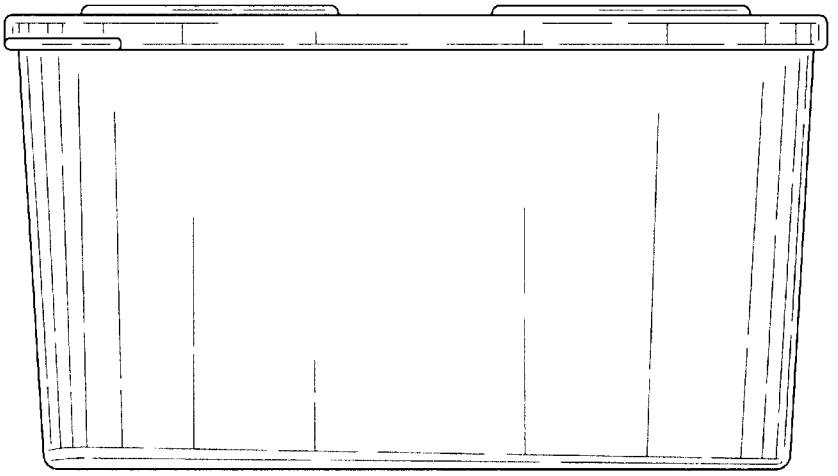

FIG. 5

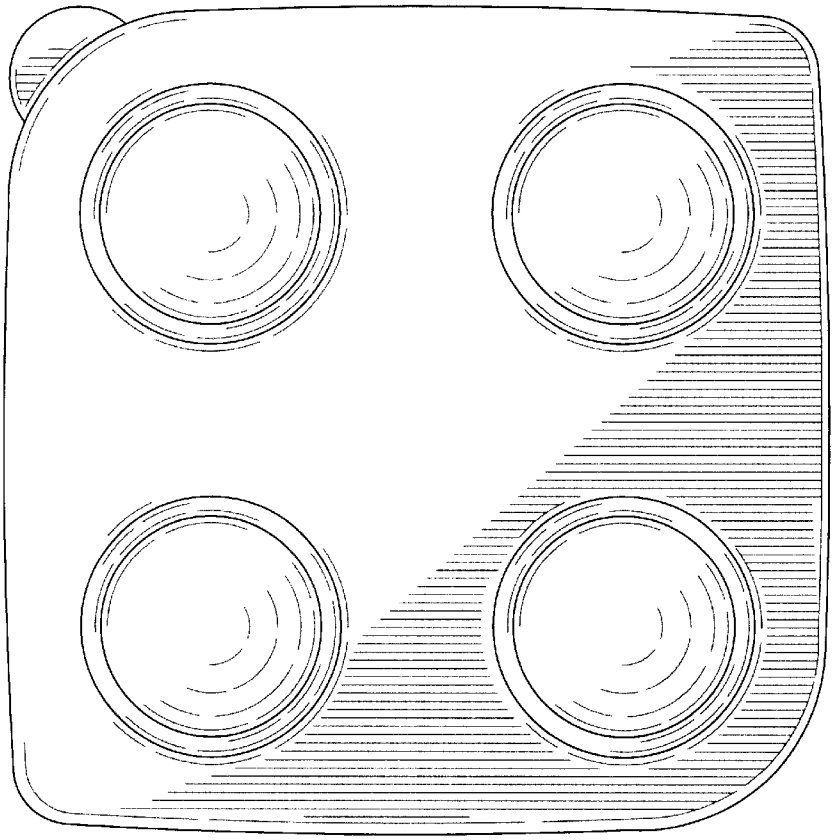

FIG. 6

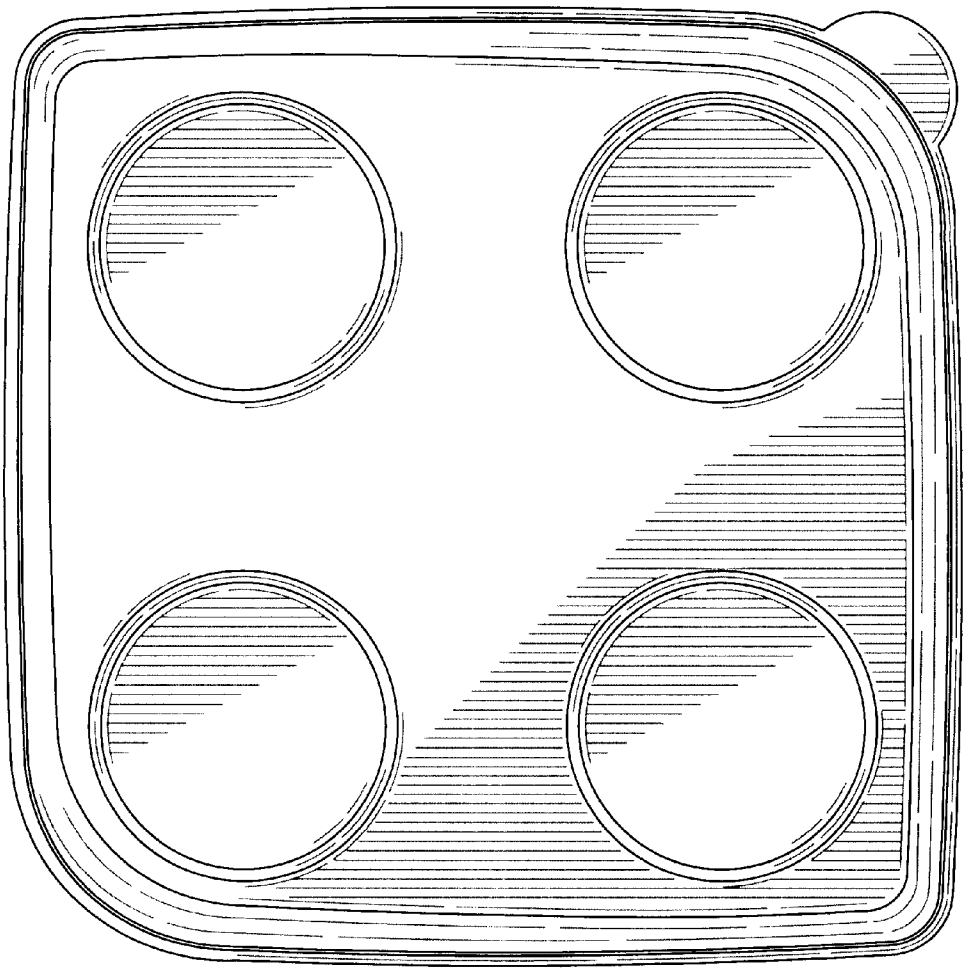

FIG. 7