United States Patent [19]

Doherty

[11] **3,709,083**

[45] **Jan. 9, 1973**

[54] **ELECTRICALLY ACTUATED PUNCH PRESS**

[76] Inventor: **Norman R. Doherty,** 870 Main Street, Farmingdale, N.Y. 11735

[22] Filed: **March 18, 1971**

[21] Appl. No.: **125,484**

[52] **U.S. Cl.** **83/575,** 72/430, 83/588, 83/637, 83/698

[51] **Int. Cl.** **B26d 5/08**

[58] **Field of Search**.....83/575, 577, 576, 588, 637, 83/698; 318/119, 135; 72/430

[56] **References Cited**

UNITED STATES PATENTS

1,684,296	9/1928	Rodsky	83/577 X
2,155,578	4/1939	Anderson	83/577 X
2,509,956	5/1950	Benoit	83/577
2,539,902	1/1951	Foley	83/577 X

Primary Examiner—Frank T. Yost
Attorney—Leonard H. King

[57] **ABSTRACT**

A solenoid having an axially movable armature is coupled to and arranged to displace the movable member of a punch press. A plurality of different tools may be clamped to an anvil and tool holder of the punch press for either assembly line or work bench type of production. The apparatus is small and relatively light in weight. The solenoid may have resin encapsulated, coiled aluminum foil strips instead of the more conventional wire wound coil.

12 Claims, 6 Drawing Figures

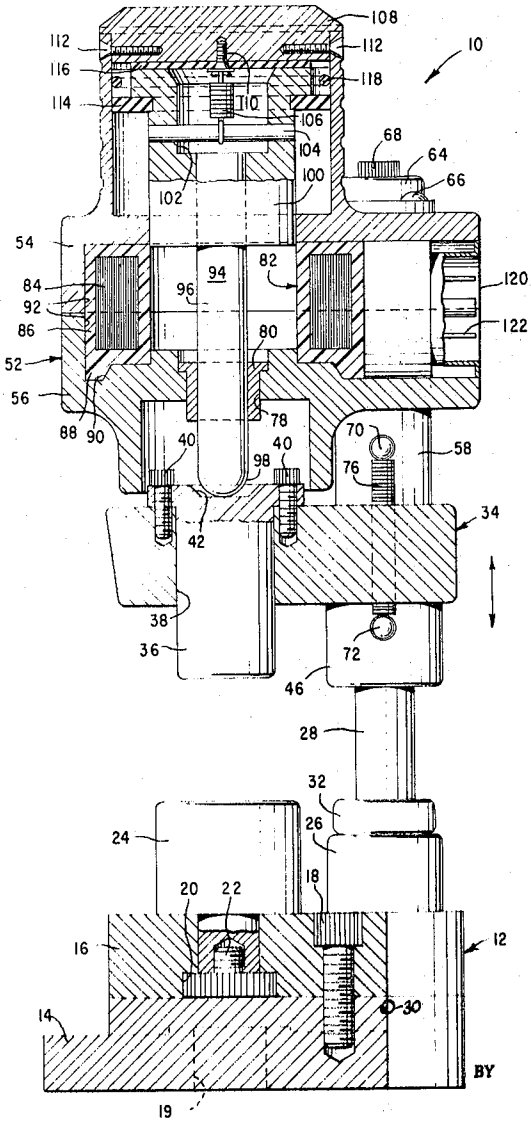

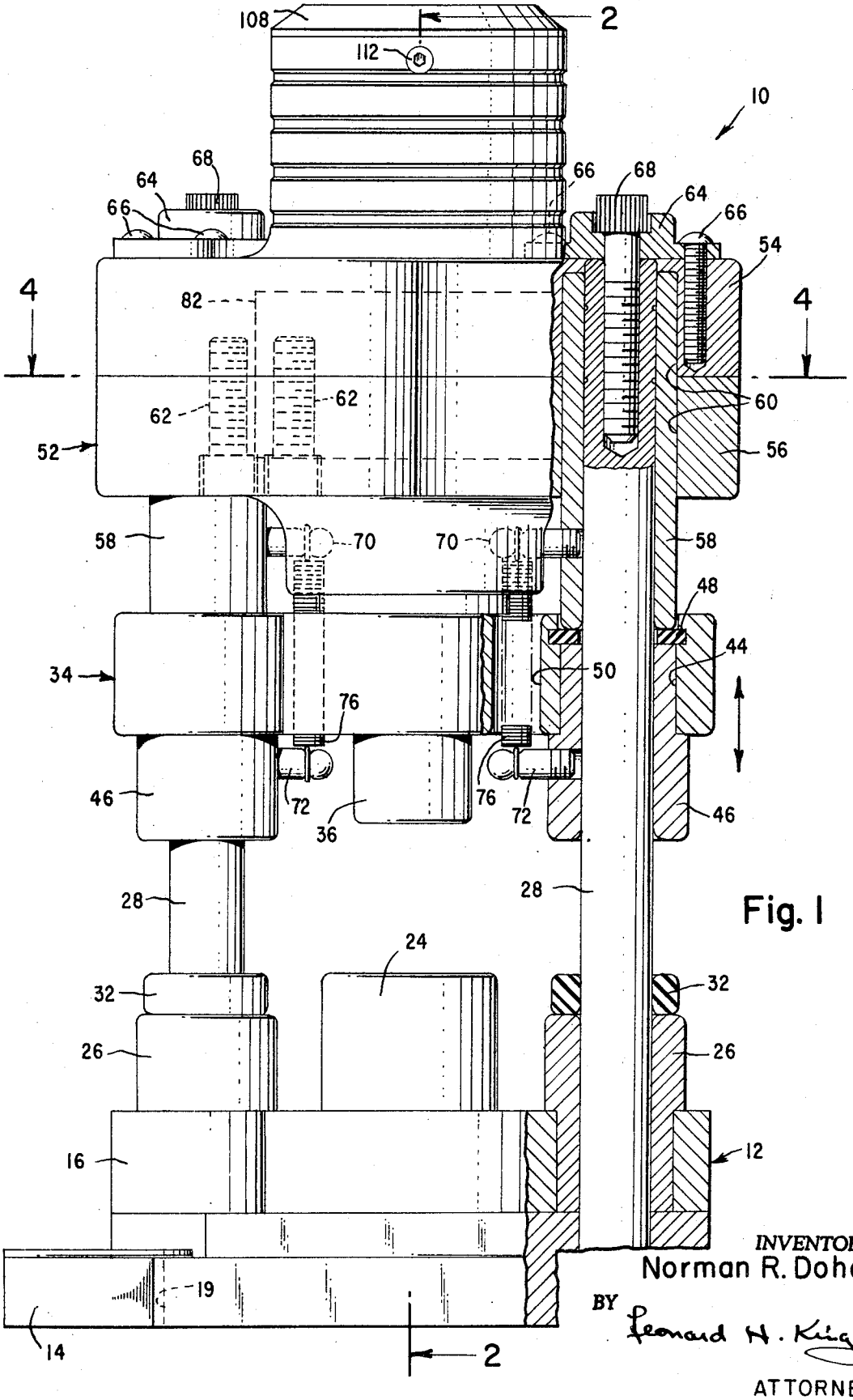

Fig. 1

INVENTOR.
Norman R. Doherty

BY Leonard H. King

ATTORNEY

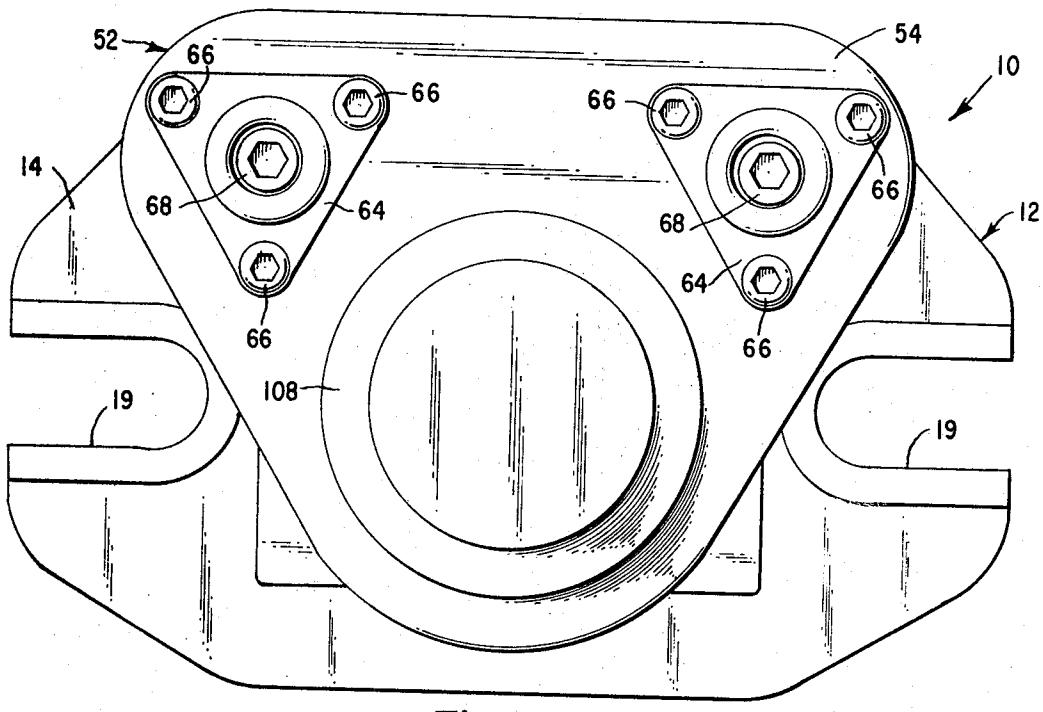

Fig. 3

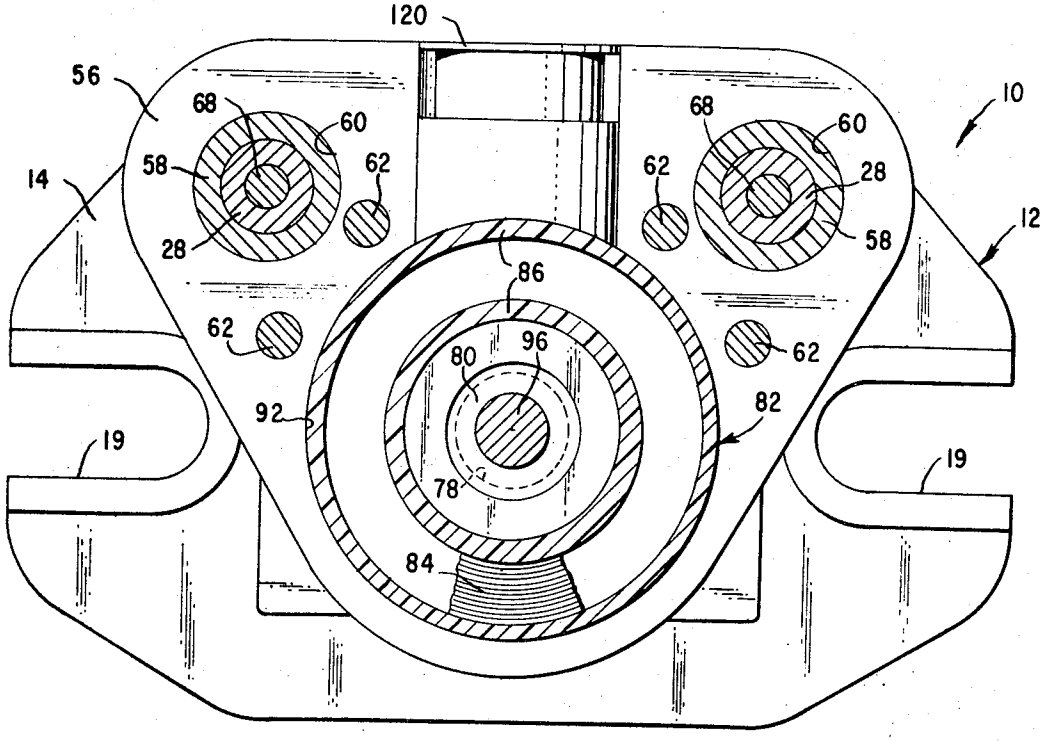

Fig. 4

INVENTOR.
Norman R. Doherty

BY

Leonard H. King

ATTORNEY

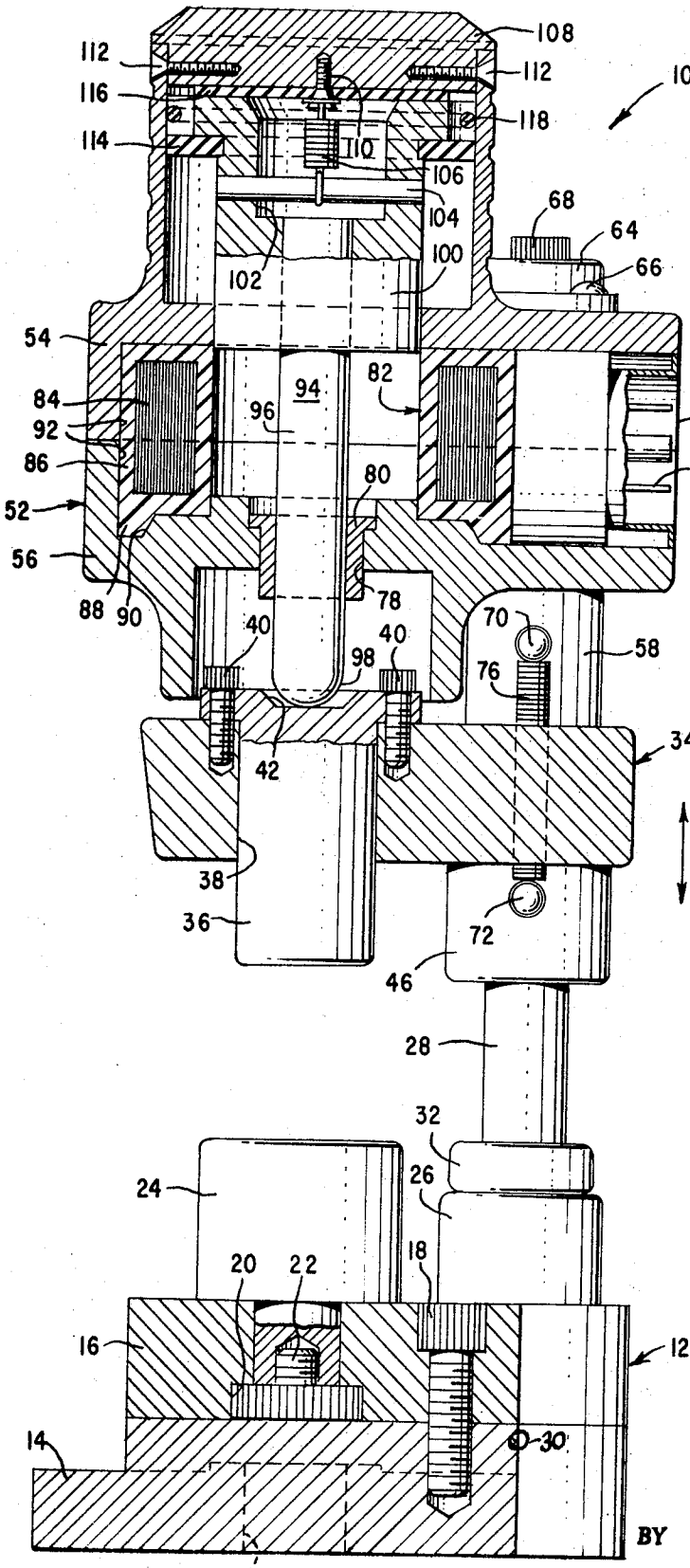

Fig. 2

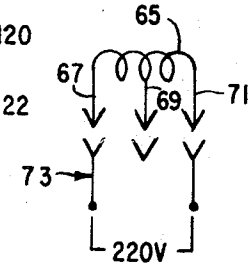

Fig. 5

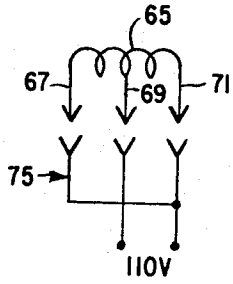

Fig. 6

INVENTOR.
Norman R. Doherty

BY

Leonard H. King

ATTORNEY

ELECTRICALLY ACTUATED PUNCH PRESS

The aforementioned Abstract is neither intended to define the invention of the application which, of course, is measured by the claims, nor is it intended to be limiting as to the scope of the invention in any way.

BACKGROUND OF THE INVENTION

1. Field of the Invention

This invention relates generally to power tools and more particularly to an electrically actuated punch press.

2. Description of the Prior Art

There is a long standing need for a low cost, small sized punch press. While there are many punch presses presently on the market, these devices are generally large and cumbersome. The most common devices in the prior art are those punch presses that are operated by means of a fly wheel or by hydraulic pressure requiring a source of compressed air. More specifically the need exists for a small, high capacity die set or punch press that can be operated on a bench, particularly for performing small stamping and assembly operations.

SUMMARY OF THE INVENTION

The present invention fills the void in the prior art by providing a low cost, small sized punch press that is electrically actuated. A standard die set, for example, the type that is commercially available and sold by the Acme Danneman Company, Inc. of New York, is utilized in the present invention. The die set is typical of sets used in small power and foot presses and comprises a base member or die shoe having an anvil and precisely positioned leader pins and a head member or tool holder that is opposed to the anvil and which slides on bushings that are slipped over the leader pins. Since the die set assemblies that are commercially available are made in mass production, they are relatively low in cost and have the additional advantage of interchangeable parts.

The power source for the present invention is in the form of an improved solenoid that is coupled to and arranged to periodically displace the movable member or tool holder of the die set. The solenoid acts substantially faster than was possible with the prior art power sources and therefore minimizes bending forces on the leader pins so that relative lightweight components may be utilized. In one form of the invention the solenoid is wound with an aluminum foil coil in place of the more conventional wire wound coil of the prior art. Insulation means are used between the adjacent turns of the aluminum foil winding.

Accordingly, it is an object of the present invention to provide an improved punch press.

It is another object of the present invention to provide an improved, electrically actuated punch press.

An important object of the present invention is to provide an improved, electrically actuated punch press that is low in cost, small in size.

A further object of the present invention is to provide an improved solenoid for an electrically actuated punch press as described above.

Still another object of the present invention is to provide an improved solenoid for a punch press or the like, the solenoid having an aluminum foil winding.

These and other objects, features and advantages of the invention will, in part, be pointed out with particularity and will, in part, become obvious from the following more de-tailed description of the invention, taken in conjunction with the accompanying drawing, which forms an integral part thereof.

BRIEF DESCRIPTION OF THE DRAWING

In the various figures of the drawing like reference characters designate like parts.

In the drawing:

FIG. 1 is a front elevational view of the present invention, partially broken away and partially in section;

FIG. 2 is a sectional elevational view taken along line 2—2 of FIG. 1;

FIG. 3 is a plan view of the present invention;

FIG. 4 is a sectional plan view taken along line 4—4 of FIG. 1;

FIG. 5 is a schematic, electrical wiring diagram of a winding and terminal arrangement that may be used with the solenoid of the present invention; and

FIG. 6 is another electrical wiring diagram illustrating an alternative winding and terminal arrangement of the solenoid comprising the present invention.

DESCRIPTION OF THE PREFERRED EMBODIMENT

Referring now to the drawing, there is shown an improved, electrically actuated punch press **10** comprising the present invention. The punch press **10** includes a base member or die shoe generally designated by the reference character **12**. The die shoe **12** is comprised of a base plate **14** to which is secured an anvil holder **16**. Screws **18** are used for this purpose. Slots **19** formed in the base plate **14** are used for removably mounting the punch press **10** on a workbench. The anvil holder **16** has a counterbored hole **20** that is adapted to receive a screw **22** and the shank portion of an anvil **24**. The screw **22** secures the anvil **24** to the anvil holder **16**. It should be noted that the anvil **24** may be in the form of a punch, a forming tool or any other configuration that meets the requirement of the particular operation.

A pair of bushings **26** are mounted in suitably sized and placed openings in the die shoe **12** in order to receive a pair of leader pins **28**. Pins **30** are used for securing the leader pins **28** to the die shoe **12**. Resilient shock absorbers or bumpers **32** are mounted on top of the bushings **26** and about the leader pins **28** in order to cushion the downward force of punch press.

The movable portion or tool holder of the punch press **10** comprising the present invention is generally designated by the reference character **34**. A tool **36**, such as a hammer or the like, is mounted in a bore **38** formed in the tool holder **34** and is secured thereto by means of screws **40**. The upper end of the tool **36** is provided with a concave seat **42** for purposes to be described hereinafter.

Openings **44** formed in the tool holder **34** are sized and positioned so as to receive bushings **46** which are mounted on the leader pins **28** for sliding movement relative thereto. A resilient shock absorber or bumper **48** is positioned at the upper end of each of the bushings **46** and about the leader pins **28** so as to cushion the upward force of the punch press **10**. Finally, the punch holder **34** is provided with a pair of axially extending openings **50** whose function will be described subse-quently.

A two-part housing generally designated by the reference character **52** is provided at the upper end of the punch press **10**. The two-part housing **52** is comprised of an upper section **54** and a lower section **56** both of which may be metal castings. A guide sleeve **58** is positioned about the upper end of each of the leader pins **28**, the sleeve **58** extending through coaxial bores **60** formed in the upper and lower housing sections **54** and **56**. Screws **62** are used to secure the two housing sections **54** and **56** to each other. A plate **64** is positioned above the top of the upper housing **54** and is secured thereto by means of screws **66**. Screws **68** capture the housing **52** to the leader pins **28** in order to provide additional rigidity.

An upper, threaded stud **70** and a lower, threaded stud **72** are secured to each sleeve **58** and its associated bushing **46**, respectively. The outer ends of the studs **70** and **72** include reduced diameters or annular grooves that provide means for anchoring compression springs **76**. It will be noted, particularly in FIG. **1**, that the springs **76** extend through the openings **50** formed in the punch holder **34**. The lower housing half **56** is provided with a counterbored, centrally located hole **78** in which is positioned a guide bushing **80** in a force fit.

A solenoid generally designated by the reference character **82** is positioned in the housing **52** as shown, for example, in FIG. **2**. In the embodiment illustrated, the solenoid **82** is comprised of an aluminum foil winding **84** that has insulating material positioned between adjacent turns. The aluminum foil winding **84** is encapsulated in an epoxy resin material **86**. An annular rim **88** of the epoxy material **86** is received in an annular recess or groove **90** formed in the lower housing half **56** in order to key the solenoid **82** to the housing **52**. The remainder of the epoxy material **86** is positioned within a recess **92** formed in both housing halves **54** and **56**. A plug member connected to the winding **84** may be partially encapsulated in the resin.

An armature generally designated by the reference character **94** is slidable relative to the aluminum foil winding **84**. The armature **94** is comprised of a shaft portion **96** that passes through the bushing **80** in the lower housing half **56**. The shaft **96** has a spherical end **98** which is received in the concave recess **42** formed at the top of the tool holder **36**. The opposite end of the armature **94** is in the form of an enlarged head portion **100**.

As shown particularly in FIG. **2**, the head portion **100** is provided with a central bore **102** at the upper end thereof. A pin **104** extends transversely through the head portion **100** and through the bore **102**. A compression spring **106** has one of its ends secured to the pin **104** and has its opposite end secured in any suitable manner to a cap **108**, such as by means of a screw **110**. The cap **108** is secured to the upper housing half **54** by means of screws **112**. Resilient shock absorbers in the form of washers **114** and **116** are positioned about the head portion **100** of the armature **94** in order to provide cushioning means for the armature **94** at the upper end of its strike. An O-ring **118** is received in an annular groove at the upper end of the head portion **100** of the solenoid armature **94** and forms a seal together with the internal wall of the hollow housing **52**. A lateral extension **120** is formed in the two housing halves **54** and **56** in order to provide an enclosure for terminal means **122** of the solenoid **82**.

A preferred circuit is shown in FIGS. **5** and **6** wherein winding **65** is shown with end taps **67** and **71** and center tap **69**. Cable **73** is arranged to connect the winding to a 220V source. On the other hand, in FIG. **6** there is shown cable **75** with provision to connect end taps **67** and **71** together to one leg of a 110V circuit. Thus a single winding can be used optionally on 110V or 220V. It is contemplated that the solenoid be energized from a circuit which can provide a predetermined number of cycles of power or even a fraction of a cycle if desired.

When the solenoid **82** is energized by a suitable source of electricity, the armature **94** will drive the tool holder **34** and the tool **36** in a downward direction against the workpiece that is resting on the anvil **24**. The bushings **46** will slide downwardly along the leader pins **28**. During this portion of the operating cycle the springs **76** and **106** will be extended. Springs **76** serve to return the tool holder **34** to its initial, upper position when the solenoid **82** is de-energized. Spring **106** serves to pull the armature **94** upwardly to its initial position when the solenoid **82** is de-energized.

From the foregoing it will be evident that an improved, low cost punch press has been provided. The punch press is small enough to be used in assembly line production or on a work bench, for example, in a model shop. Different tools may be readily clamped to both the anvil and the tool holder. Because of its high rate of operation, the present invention avoids bending of the leader pins as was quite prevalent in the prior art wherein hydraulic actuating means were utilized. With the present invention it is possible to punch a three-eighths-inch diameter hole in three-sixteenths-inch thick stock of aluminum material with a 10-inch high press.

The present invention permits operating the device on either 110 volts or 220 volts by the use of the proper connector plug since the termination of the coil is brought out to different terminals. The improved solenoid comprising the present invention, preferably uses a coil formed of aluminum foil that is wound with insultating material interleaved. However, it should be clearly understood that a wire wound coil may be used instead.

There has been disclosed heretofore the best embodiments of the invention presently contemplated. However, it is to be understood that various changes and modifications may be made thereto without departing from the spirit of the invention.

What I claim as new and desire to secure by Letters Patent is:

1. An electrically actuated punch press comprising:

a. a die shoe having an anvil mounted thereon;

b. a plurality of leader pins extending from said die shoe;

c. a tool holder slidably mounted on said leader pins, said tool holder being in opposition to said anvil;

d. spring means for normally urging said tool holder in a direction away from said anvil;

e. a solenoid having a wound coil and an armature linearly movable through said coil, said armature engaging said tool holder when said solenoid is energized thereby driving said tool holder in a direction towards said anvil; and

f. means for moving said armature in a direction away from said anvil when said solenoid is de-energized.

2. The punch press in accordance with claim 1 wherein said solenoid is contained within a housing and wherein there is further included means for coupling said housing directly to said leader pins.

3. The punch press in accordance with claim 1 wherein there is further included bushing means in said tool holder for slidably receiving said leader pins.

4. The punch press in accordance with claim 1 wherein there is further included resilient bumper means on said leader pins for cushioning said punch holder at the end of its stroke when said solenoid is energized.

5. The punch press in accordance with claim 1 wherein there is further included resilient bumper means on said leader pins for cushioning said punch holder at the end of its stroke when said solenoid is de-energized.

6. The punch press in accordance with claim 1 wherein said wound solenoid coil comprises a length of aluminum foil and there is further included a layer of electrical insulation between adjacent turns of said winding.

7. The punch press in accordance with claim 1 wherein said tool holder includes a concave seat, said armature having a spherical end portion in engagement with said seat.

8. The punch press in accordance with claim 2 wherein there is further included resilient bumper means intermediate said armature and said housing.

9. The punch press in accordance with claim 2 wherein said means for moving said armature comprises spring means extending between said housing and said armature.

10. The punch press in accordance with claim 9 wherein there is further included a pin extending through said armature, one end of said spring means being coupled to said pin, said housing including a cap and means for securing said cap to said housing, the other end of said spring means being secured to said cap.

11. The punch press in accordance with claim 2 wherein said solenoid coil is encapsulated in an epoxy resin.

12. The punch press in accordance with claim 11 wherein said encapsulated coil is keyed to said housing.

* * * * *