United States Patent

[11] 3,621,417

[72] Inventor **Josef E. Halaby**
Brooklyn, N.Y.

[21] Appl. No. **18,258**
[22] Filed **Mar. 10, 1970**
[45] Patented **Nov. 16, 1971**

[73] Assignee **Alarm Products International, Inc.**
Long Island City, N.Y.

[54] **MAGNETICALLY RESPONSIVE SWITCHING APPARATUS**
16 Claims, 7 Drawing Figs.

[52] **U.S. Cl.** **335/205,** 200/61.48, 200/61.52, 335/207
[51] **Int. Cl.** **H01h 51/28**
[50] **Field of Search** 200/61.48, 61.52, 61.41; 335/205, 206, 207, 151, 154

[56] **References Cited**

UNITED STATES PATENTS

2,595,769	5/1962	Cooley	335/205 X
3,150,461	9/1964	Grist	200/61.41 X
3,187,129	6/1965	McBrian	335/205 X
3,525,060	8/1970	Scheidig	335/205 X

Primary Examiner—Bernard A. Gilheany
Assistant Examiner—R. N. Envall, Jr.
Attorney—Posnack, Roberts & Cohen

ABSTRACT: Magnetically responsive switches are provided which have contacts which are normally open or normally closed or sets of contacts which are respectively closed and open. In those switches having both the open and closed sets of contacts, provision is made for distinguishing between the presence of one controlling magnet or more than one. In the presence of one magnet, the set of contacts which is normally open is closed. The introduction of a second magnet will cause one or the other of the sets to open. Provision is made for adjustment of the responses to magnetic forces and to avoid the effects of residual magnetism.

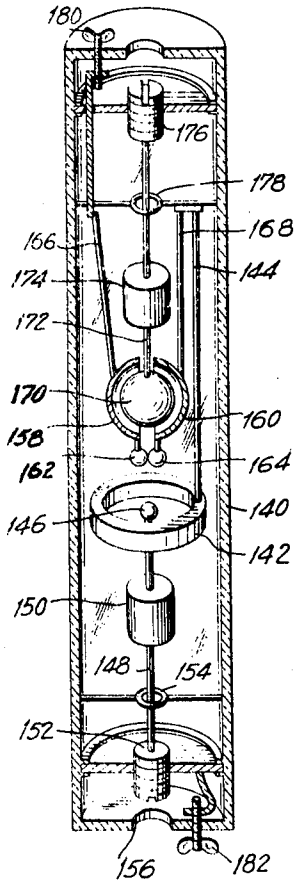

FIG. 1

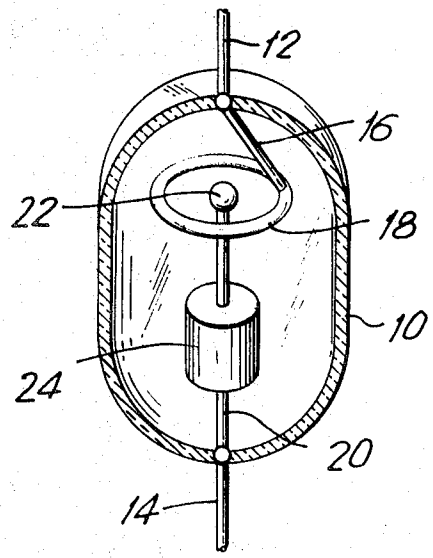

FIG. 2

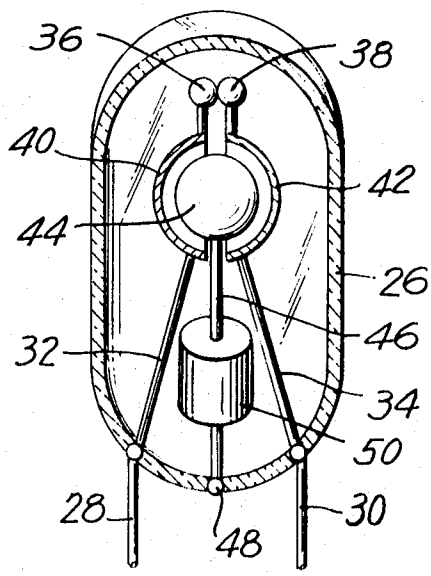

FIG. 3

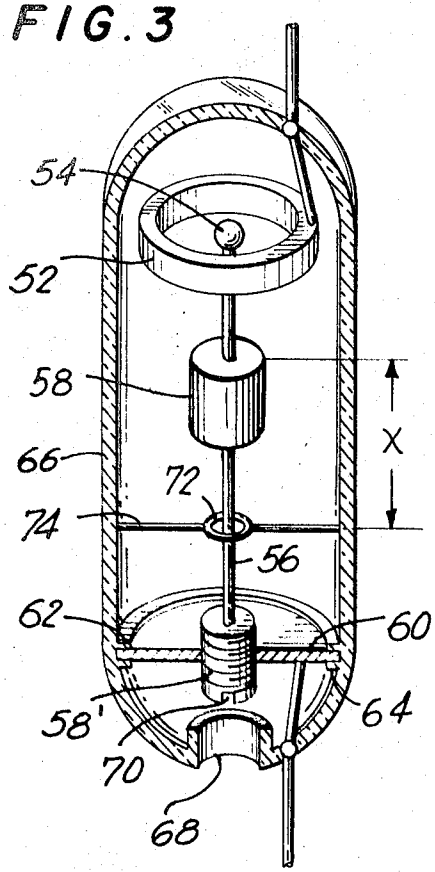

FIG. 4

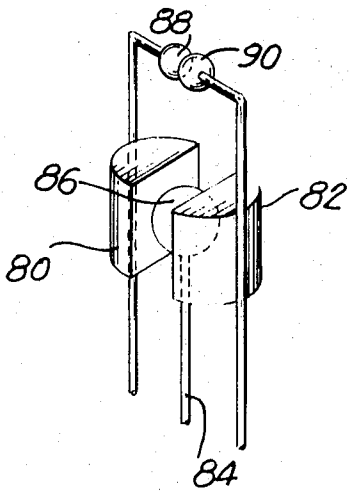

INVENTOR.
JOSEF HALABY

BY

Posnack, Roberts & Cohen
ATTORNEYS

FIG. 5

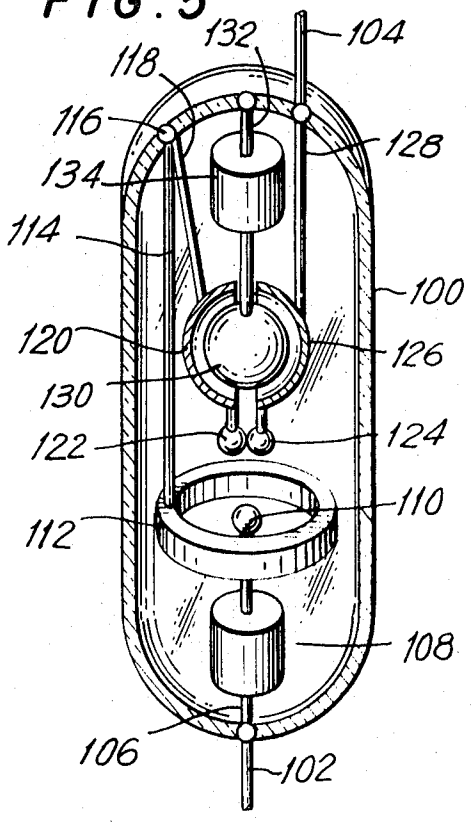

FIG. 6

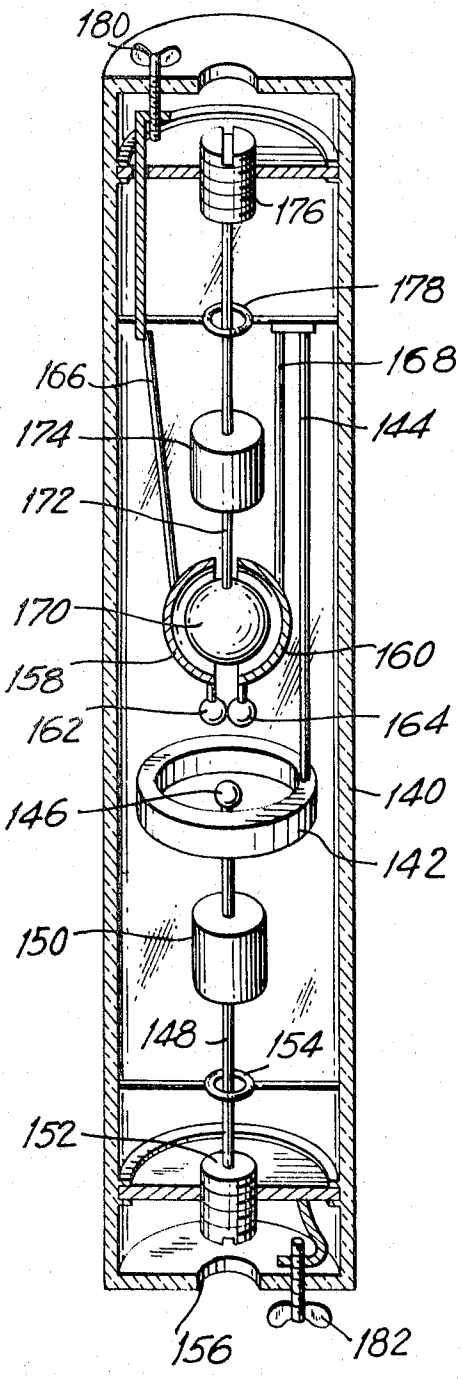

FIG. 7

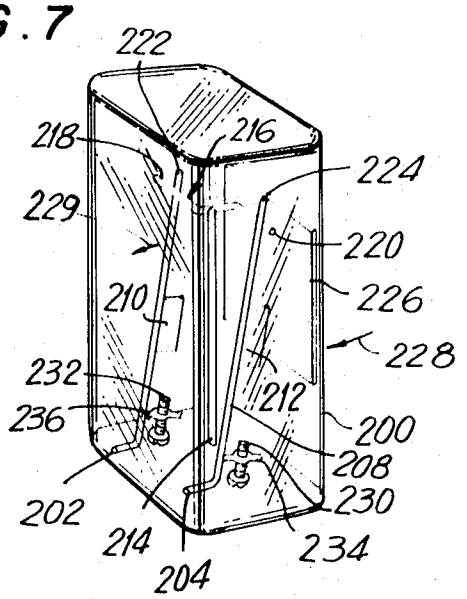

INVENTOR.
JOSEF HALABY

BY

Posnack Roberts Cohen
ATTORNEYS

MAGNETICALLY RESPONSIVE SWITCHING APPARATUS

BACKGROUND

Field Of Invention

This invention relates to magnetically responsive switches and more particularly to switches for use in burglar alarm systems.

In certain types of burglar alarm systems, a switch will be placed, for example, on or adjacent a window to be operated by unauthorized opening of the window. One known technique for accomplishing this is by the use of a magnet and a magnetically responsive switch. The switch, in this case, can be located adjacent the window and the magnet on the window such that movement of the latter will move the magnet and operate the switch thereby initiating an alarm.

One deficiency of this known arrangement is that it has been found possible to employ an auxiliary magnet which is held stationary adjacent the position of the first magnet while the first magnet is displaced. As a consequence of this practice, it becomes possible to open the window and displace the first magnet while preventing the switch from operating. This allows the opening the window without sounding the alarm.

It is an object of the invention to provide an improved magnetically responsive switch which avoids the aforedescribed problem.

Another object of the invention is to provide improved magnetic switches which are nondirectionally oriented.

Still another object is to provide improved switches which are readily manufactured by mass production techniques.

Magnetically responsive devices such as reed relays are known. One deficiency of the known devices is that residual magnetic effects can interfere with the proper operation thereof.

Accordingly, it is a further object of the invention to provide improved switches which avoid the consequences of residual magnetic forces.

SUMMARY OF INVENTION

In accordance with the invention, magnetically responsive switching apparatus is provided comprising two terminals between which is located a magnetically responsive switching means responsive to the presence of a first magnet to maintain an open or a closed circuit condition between the terminals and responsive to the presence of said first magnet and a second magnet to change the circuit condition between the terminals.

The above-noted switching means comprises in accordance with the invention first and second contact means which are respectively open and closed in normal condition. One of the contact means is responsive to a first magnetic force which force is ineffective to change the open and closed condition of the other contact means to assume the same open or closed condition as said other contact means. The introduction of a second magnetic force is effective to change the open or closed condition of one of these contact means.

In further accordance with the invention, each contact means includes relatively displaceable contacts. One of the contacts may be relatively and the other displaceable, or both of the contacts may be displaceable. At least one of the contacts is of a nonmagnetic material to avoid the consequences of residual magnetism. The aforesaid contact means each include magnetically responsive spring means for displacing at least one of the associated contacts, the spring means being normally positioned for keeping the contacts of one of the contact means open and the contacts of the second contact means closed.

As a feature of the invention adjustment means are provided to adjust the responsiveness of at least one of the spring means to magnetic forces the spring means preferably including a spring element with a magnetically responsive element attached thereto. According to a further feature of the invention an envelope is provided encapsulating the aforesaid contact means.

In accordance with one embodiment of the invention the contacts of each section of the switch are inclusive of fixed contacts which are interconnected in a continuous conductive structure.

According to a specific construction within the scope of the invention, one of the contacts is in the form of a ring encircling the other contact which is mounted sn a spring element for radial displacement against the ring. According to another specific construction, the spring means are cantilevered spring elements, one of which is normally inclined against a fixed contact structure and the other of which is inclined away from the fixed contact structure.

Still another specific construction involves the use of two displaceable contacts between which is mounted a magnetically responsive spring element capable of displacing either one or both of the associated contacts.

The above and further constructional features of the invention will be found in the detailed description which follows hereinafter.

BRIEF DESCRIPTION OF DRAWING

FIG. 1 diagrammatically illustrates a first embodiment of the invention including one switch section;

FIG. 2 diagrammatically illustrates a second embodiment of the invention also including one switch section;

FIG. 3. illustrates a variation of the construction of FIG. 1 with provisions for adjustment:

FIG. 4 diagrammatically illustrates a variation of FIG. 2 for the incorporation of adjustment means;

FIG. 5 illustrates a two-section switching apparatus embodying the principles of FIGS. 1 and 2;

FIG. 6 illustrates a variation of the construction of FIG. 5 embodying an adjustment means; and

FIG. 7 illustrates diagrammatically and in perspective a further embodiment of the invention.

DETAILED DESCRIPTION

The switching apparatus of FIG. 1 comprises an envelope **10** of glass into which extend two leads **12** and **14** constituting respective terminals of the switching apparatus. Attached to the lead **12** is a fixed support **16** on which is supported an electrically conductive ring **18** of copper or some other nonmagnetizable material. Support **16** is also conductive so that a series circuit exists consisting of lead **12**, support **16** and ring **18**.

Attached to lead **14** is a spring wire **20** which is of electrically conductive material which is also preferably nonmagnetic.

A contact **22** of electrically conductive material is mounted on the free end of spring wire **20** and a collar **24** of magnetically responsive material is mounted on wire **20**.

The contact **22**, being mounted sn spring wire **20**, is free to undergo radial displacement so that it makes contact with ring **18**. Since contact **22**, wire **20** and lead **14** are all electrically conductive, a series circuit can be completed between leads **12** and **14** by bringing contact **22** into engagement with ring **18**. It will be noted that the construction is nondirectional or that, in other words, magnetic force acting on element **24** in any direction can bring contact **22** into engagement with ring **18** provided that the magnetic force is sufficiently strong. It is also to be noted that since ring **18** and preferably also contact **22** are of a material which is nonmagnetizable, there can be no residual magnetic force and consequently engagement between elements **18** and **22** cannot be maintained once the applied magnetic force has been removed.

The switching apparatus illustrated in FIG. 2 also comprises an envelope indicated at **26** into which enter leads **28** and **30** to which are attached spring supports **32** and **34** of electrically conductive material. Contacts **36** and **38** are mounted at the free ends of members **32** and **34** which normally hold these contacts in engagement with one another.

Members 32 and 34 include segments 40 and 42 of substantially hemispherical shape. These segments enclose or encircle a spherical element 44 mounted on a spring member 46 supported at 48 within the envelope 26. A collar 50 of magnetically responsive material is mounted on the spring element 46 and is the means by which a magnetic force applied to the illustrated switching apparatus is effective to change the open or closed condition of the contacts.

More particularly, a magnetic force applied to the switching apparatus will act upon element 44 thereby to laterally displace the wire 46 which in turn will carry with it the spherical member 44 which will operate against one or both of segments 40 or 42 as a consequence of which the contacts 36 and 38 will separate.

As in the prior embodiment of the invention, contacts 36 and 38 and/or spherical member 44 are preferably of nonmagnetic material to avoid the effects of residual magnetism. It is also to be noted that the switching apparatus illustrated in FIG. 2 is nondirectional; as a consequence thereof, magnetic force in any direction will operate to open the contacts which are otherwise normally closed.

The wire elements in FIGS. 1 and 2 may be of spring steel wire such as piano or violin wire or other music wire. These elements may be fabricated in the form of a coil to increase their sensitivity.

In the embodiment of the invention illustrated in FIG. 3, a ring 52 encircles a contact 54 mounted on a spring wire 56 encircled by a magnetizable collar 58. The wire 56 is mounted on a threaded member 58' accommodated within a threaded bore in an element 60 supported by retainers 62 and 64 on the interior of the envelope 66. An opening 68 is provided at one end of the envelope to permit the insertion of an adjusting tool into a slot 70 at one end of element 58'. The wire 56 is encircled by a loop 72 supported on the interior of the envelope 66 by a support 74.

In this embodiment of the invention, adjustment of element 58' adjusts the distance of the cantilever length of the structure with respect to which the magnetic force is effective. Since contact 54 will be displaced longitudinally with wire 56, the ring 52 is given additional height to accommodate the same.

The embodiment of the invention illustrated in FIG. 4 illustrates that the spherical sections of FIG. 3 are given a cylindrical form as indicated at 80 and 82, the purpose of this being to accommodate longitudinal adjustment of the supporting wire 84 on which spherical member 86 is mounted. Contacts 88 and 90 are in this embodiment of the invention normally closed as previously explained with respect to the embodiment of FIG. 2.

All of the above-described embodiments of the invention are devices with single switching sections and share in common that they are generally nondirectional and preferably fabricated of materials which avoid the consequences of residual magnetism. The embodiment of FIG. 5, however, combines the features of two such switches and comprises a normally closed and a normally open section connected in series and intended to achieve the object of distinguishing between the presence of a single external magnet and more than one external magnet.

More particularly, the embodiment of FIG. 5 includes a switch 100 in which enter leads 102 and 104. Lead 102 has connected thereto a spring wire 106 having thereon a collar 108 of magnetically responsive material, a contact 100 being mounted on the free end of wire 106. Contact 110 is encircled by ring 112 of electrically conductive, nonmagnetic material which is held in fixed position by a support 114 mounted at end 116 within the envelope 100. To the end 116 is mounted a displaceable spring wire 188 supporting a spherical section 120 thereon upon which is superposed a contact 122.

Contact 122 is normally in engagement with a contact 124 atop spherical section 126 supported on spring wire 128. Encircled by the spherical sections 120 and 126 is a spherical member 130 mounted on a spring wire 132 encircled by a collar 134 of magnetically responsive material.

The aforedescribed switching apparatus is composed of a series circuit having two sets of contacts therein, one of these sets of contacts being normally open and the other set of contacts being normally closed. The circuit passes from lead 104 through spring wire 128, segment 126, contact 124, and contact 122 and thence via segment 120 to spring wire 118. From this point the circuit continues through support 114, ring 112, contact 110 when in engagement with ring 112 and thence through spring wire 106 to lead 102.

The strength of spring wire 106 is related to that of spring wire 132 to achieve the aforenoted function of distinguishing between the presence of one external magnet or more than one external magnet. More particularly, this relationship is as follows: if one magnet is brought to the vicinity of envelope 100, collar 108 is activated and contact 110 is brought against ring 112 and since the contacts 122 and 124 are normally closed, a circuit is completed between leads 102 and 104. This is effective in a conventional burglar alarm system to prevent an alarm from being sounded. It will be noted that the strength of spring 132 will be sufficient for preventing collar 134 from being attracted by the magnet thus preventing sphere 130 from being brought into engagement with either of segments 120 or 126 whereupon there is no operating force brought into play on contacts 122 and 124. Assuming now that a second magnet is brought adjacent the envelope 100, the magnetic force of this second magnet will either be cumulative with the force of the first magnet or will be in opposition thereto. If the force is cumulative, the combined magnetic forces will now be sufficient to attract collar 134 by overcoming the resistance of spring 132 and so displace collar 134 whereupon one of the segments 120 or 126 will be engaged and contacts 122 and 124 separated. On the other hand, if the second magnetic force is in opposition to the first magnetic force, this will decrease the magnetic force acting on member 108 and contact 110 will be released from engagement with ring 112 and once again the circuit between leads 102 and 104 will be opened.

The cumulative effect of the aforegoing is that a switching apparatus is provided which responds to the presence of a first magnet by providing a closed circuit, whereas the introduction of a second magnet will cause the circuit between leads 102 and 104 to be opened.

In the case of a burglar alarm system, the aforesaid switching apparatus is very useful. The presence of a first magnet, as is conventional, located for example on a window adjacent which envelope 100 is mounted, will cause the switching apparatus to constitute a closed circuit. Opening of the window by itself will remove the magnet, disengage contact 100 from ring 122 thereby opening the circuit and causing an alarm to ring. Should an attempt be made to gain unauthorized access by bringing a second magnet into juxtaposition with envelope 100 while the window is being opened, the presence of the second magnet will cause the circuit to be opened as aforesaid and an alarm will be initiated thereby indicating this attempt to make an unauthorized entry.

The embodiment in FIG. 6 is similar to that of FIG. 5 in that it includes two serially related sections, wherein there is employed an envelope 140 in which a ring 142 is supported in fixed position on a support 144. A contact 146 is mounted on a spring wire 148 encircled by a magnetic collar 150, there being provision for adjustment by the use of elements 152 and 154. Access to adjustment element 152 is provided through opening 156.

Cylindrical elements 158 and 160 support normally engaged contacts 162 and 164 and are in turn supported on spring wires 166 and 168. A displaceable element 170 is supported on a spring wire 172 encircled by magnetic element 174 and adjustment possibilities are provided by the use of adjustment elements 176 and 178. Connections are made through terminals 180 and 182.

As in the previous embodiment of the invention, contacts 162 and 165 are normally closed, but contacts 142 and 146 are normally open. Contacts 142 and 146, however, respond

to the presence of a single magnet by closing thereby providing a closed circuit between terminals **180** and **182**. The introduction of a second magnet, however, will work on one of the sets of contacts as aforesaid to open the same, whereby an open circuit will result between the terminals of this switching apparatus.

The embodiment illustrated in FIG. **7** includes an envelope **200** having **200** terminals **202** and **204** to which are affixed cantilever springs **206** and **208** of phosphor bronze or the like. Springs **206** and **208** respectively support magnetic elements **210** and **212**. A fixed lead **214** is mounted within the envelope **200** and supports a fixed Z-shape contact structure **216** of electrically conductive material. The end portions **218** and **220** of structure **216** effectively constitute contacts as do the end portions **222** and **224** of springs **206** and **208**. A magnetizable element **226** is supported on envelope **200** to provide a magnetic screen to concentrate in the direction of arrow **228** the applied magnetic field which can originate from a different direction depending on the relative position of the external influencing magnet.

Normally, spring **206** is yieldingly urged in the direction of arrow **229** to a position of rest against contact **218** thereby providing a set of normally closed contacts Normally, contact **224** is spaced from contact **220** to provide a set of normally open contacts.

The presence of a single external magnet, for example, on the outside of element **226** will operate one magnetic element **212** to displace spring **208** and bring contact **224** into engagement with contact **220** as a consequence of which a closed circuit will be caused to exist between terminals **202** and **204**. If then a second magnet is brought into a position of influence relative to envelope **200**, its force will either add to or oppose that of the first external magnet. If the combined magnetic forces are cumulative, they will operate on element **210** to displace spring **206** and pull contact **222** away from contact **218**. If the forces are subtractive, there will no longer be sufficient force acting on magnetic element **212** and the strength of spring **208** will pull contact **224** away from the contact **220**. As a consequence of this a switching apparatus is again provided for distinguishing between the presence of one magnet on the one hand or more than one magnet on the other hand.

In the embodiment of FIG. **7**, adjustment possibilities are provided in the form of adjustment screws **230** and **232** engaging threaded bores in elements **234** and **236**.

From the above it will be seen that the single section switching devices of the invention are characterized by being nondirectional and free from the effects of residual magnetism. It will be seen that the multiple section switching devices of the invention provide for the distinguishing between different magnetic environments. In the multiple section switching devices there are provided two sets of contacts, one of which is normally open and the other of which is normally closed. The open set is brought to closed condition by the presence of one external magnet and the presence of a second magnet will cause one or the other of the sections to assume an open circuit condition

What is claimed is:

1. Apparatus comprising two terminals and between said terminals magnetically responsive switching means responsive to the presence of a first magnet to maintain an open or a closed circuit condition between said terminals and responsive to the presence of said first magnet and a second magnet to change the circuit condition between said terminals; said switching means including first and second contact means which are respectively normally open and normally closed, one of said contact means being responsive to a first magnetic force, which force is ineffective to change the open or closed condition of the other contact means, to assume the same open or closed condition as said other contact means, the introduction of a second magnetic force being effective to change the open or closed condition of one of the said contact means; each of said contact means including relatively displaceable contacts at least one of which is of nonmagnetic material, said first and second contact means each including magnetically responsible spring means for displacing at least one of the associated contacts and normally positioned for keeping the contacts of the first contact means open and the contacts of the second contact means closed, the spring means of the first contact means responding to a first magnetic force to enable the associated contacts to be closed, the presence of a second magnetic force being effective on at least one of the spring means to open the contacts of the associated contact means.

2. Apparatus as claimed in claim **1** comprising means to adjust the responsiveness of at least one of the spring means to magnetic forces.

3. Apparatus as claimed in claim **1** comprising an envelope encapsulating said contact means.

4. Apparatus as claimed in claim **1**, wherein one of the contacts of each of the respective contact means is connected in a fixed electrically conductive continuous structure, and the spring means are electrically conductive and respectively maintain the contacts thereon yieldingly against and spaced from said fixed structure.

5. Apparatus as claimed in claim **1**, wherein the spring means include electrically conductive spring elements and magnetic members thereon.

6. Apparatus as claimed in claim **1**, wherein one of the contacts of one of the contact means is a ring encircling the other contact thereto, the latter said contact being supported by said spring means within said ring for radial displacement against the same.

7. Apparatus as claimed in claim **2**, wherein one of the contact means includes support means yieldably supporting the contacts thereof in engaged relation, said magnetically responsive spring means being positioned to engage and displace at least one of said support means.

8. Apparatus as claimed in claim **1**, wherein the spring means are of different strengths.

9. Switching apparatus comprising an electrically conductive ring, a contact within said ring, and magnetically responsive spring means supporting said contact for displacement against said ring.

10. Apparatus as claimed in claim **9**, wherein said spring means includes a spring coaxially aligned with said ring and a magnetic member on the spring.

11. Apparatus as claimed in claim **10** comprising means to adjust the effective strength of said spring.

12. Apparatus as claimed in claim **10** comprising means encapsulating the ring, the contact and spring means and including terminal members connected to said ring and spring means.

13. Switching apparatus comprising contacts, supports supporting the contacts in normally engaged relation but enabling the displacement of at least one of the contacts to separate the same, and magnetically responsive means for engaging at least one of the supports and responding to magnetic forces to separate said contacts.

14. Apparatus as claimed in claim **13**, wherein the magnetically responsive means includes a spring and a magnetic member on said spring.

15. Apparatus as claimed in claim **14** comprising a sphere on said spring, said supports including spherical sections cooperatively encircling said sphere.

16. Apparatus as claimed in claim **14** comprqsing means to adjust the strength of said spring.