March 21, 1967 M. J. KOFOID 3,310,807

APPARATUS FOR EFFECTING THE TRANSMISSION OF ELECTROMAGNETIC ENERGY THROUGH A DENSE PLASMA

Filed Feb. 24, 1964

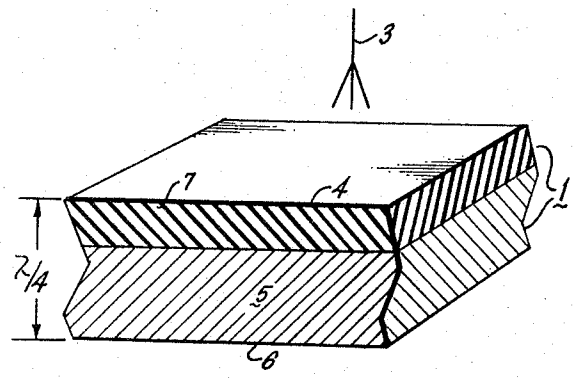

Fig. 1.

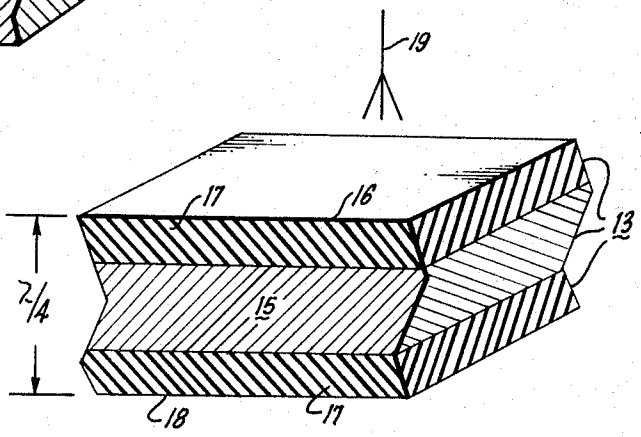

Fig. 2.

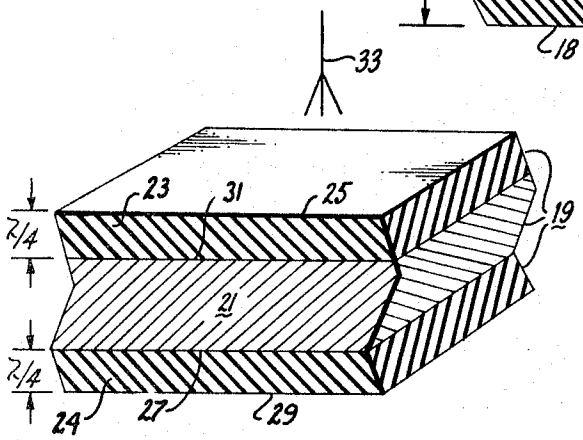

Fig. 3.

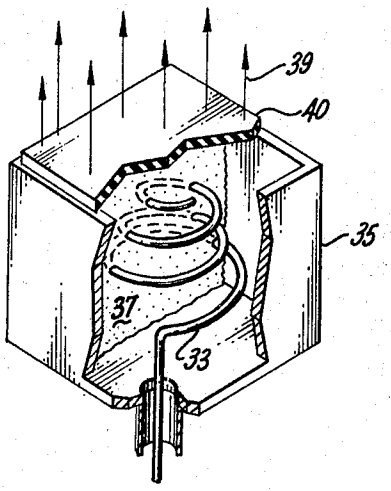

Fig. 4.

INVENTOR.
MELVIN J. KOFOID

BY K. W. Thomas

ATTORNEY

United States Patent Office 3,310,807 Patented Mar. 21, 1967

3,310,807

APPARATUS FOR EFFECTING THE TRANSMISSION OF ELECTROMAGNETIC ENERGY THROUGH A DENSE PLASMA

Melvin J. Kofoid, Seattle, Wash., assignor to The Boeing Company, Seattle, Wash., a corporation of Delaware

Filed Feb. 24, 1964, Ser. No. 346,792
4 Claims. (Cl. 343—787)

This invention relates to the transmission of electromagnetic waves through a dense plasma medium and more particularly to transmission of electromagnetic waves through a plasma medium such as a layer of ionized gas about an airborne vehicle, said invention providing a necessary magnetic field within the plasma medium such that electromagnetic waves may be transmitted therethrough with minimal attenuation.

Prior attempts to solve the problem of electromagnetic wave transmission through a plasma medium have been: (a) to use extremely high frequency transmitters which would avoid the problem of attenuation by employing frequencies significantly higher than the frequency of free electrons in the plasma; (b) to make use of electron cyclotron resonance by transmitting a right-hand circularly polarized signal along the direction of a sufficiently strong magnetic field established with a solenoid magnet or a permanent magnet surrounding a radiator of electromagnetic energy but not in its path, thus producing a low frequency "window" through the plasma medium because of the electron gyration in the magnetic field. This effect is established because the index of refraction of the plasma medium remains low and the transmission high; and (c) to use extremely high power electromagnetic signals which avoids the problem by making attenuation acceptable.

Method (a) is often undesirable because even moderate powers at the extremely high frequencies required are difficult to achieve. Method (b) is likewise undesirable because the magnetic field coils and pulse equipment with their power supplies are heavy. In method (c), the large powers required might be difficult to achieve in practice.

The layer of ionized gas, i.e., plasma, about an airborne vehicle can limit the transmission of electromagnetic waves to or from the airborne vehicle. The prime reason transmission of the electromagnetic waves is reduced is reflection when the waves attempt to enter or leave, the plasma sheath. The high value of reflection of electromagnetic waves is due to the high value of the index of refraction N, or the dielectric constant $E'=N^2$ of the plasma medium.

It is well known that transmission of electromagnetic or radio waves through an ionized gas with little attenuation cannot be obtained by ordinary means in the absence of a magnetic field, if the operating frequency (ω) of the electromagnetic or radio waves is less than the natural frequency (ω_p) of the free electrons within an ionized gas plasma. More specifically, electromagnetic waves cannot be transmitted through an electrical plasma where the frequency of the electromagnetic waves is less than a critical frequency $f=8980\sqrt{\eta}$, where η is the plasma density in charges per cubic centimeter.

The effect that an ionized region such as plasma has on an electromagnetic wave can be understood by considering the behavior of a single electron when under the influence of a passing electromagnetic wave. Consider an electron in a vacuum with no magnetic field present other than the weak magnetic field of the wave passing through. The wave's electric field exerts a force on the electron which varies sinusoidally along a path parallel with the flux lines of the wave. The amplitude

and average velocity of vibration of the electrons are greater the lower the frequency of the passing wave and the velocity vector of the electron is 90 degrees out of phase with the electric field vector of the electromagnetic wave because the moving electron offers an inertia reactance to the force acting upon it. Since a moving charge is an electrical current, the vibrating electron acts as a small antenna which abstracts energy from the electromagnetic wave and then reradiates this energy in a different phase, in exactly the same manner as a parasitic antenna tuned to offer an inductive reactance. The magnitude of this effect varies with the amplitude and average velocity of the electron vibration and, therefore, becomes increasingly great as the electromagnetic wave frequency is lowered. This physical phenomenon can cause essentially total reflection, i.e. zero transmission. The largest amplitudes of electron oscillation and hence the greatest effects are obtained when the passing electromagnetic wave is at its resonance frequency; above this frequency the electrons cannot follow the electric field created by the electromagnetic wave, their oscillation amplitude becomes negligible, and transmission of electromagnetic waves is unimpaired.

The electrons are particles of small mass and, as discussed, ordinarily oscillate in response to the electric field of an electromagnetic wave at frequencies below the critical. Because of their negative mass, they will oscillate with large amplitudes in synchronism with a steadily applied electric field of below the natural frequency and not just at the natural frequency. The wave can be transmitted through the plasma at frequencies less than the critical only if the electrons can be prevented from attaining appreciable coherent oscillatory motion. This prevented oscillatory motion is achieved through the application of a magnetic field by means of the teachings of this invention.

In accordance with the teachings of this invention, a method is introduced by which transmission of electromagnetic waves of frequency (ω), less than the natural frequency (ω_p) of the free electrons within an ionized gas plasma medium, is accomplished. The teachings of this invention provide the necessary magnetic field without the above-stated disadvantages. The simplest embodiment of the invention is the use of an antenna cover wall structure associated with the electromagnetic wave radiator, including a plate of ceramic magnetic material, being therefore an oxide magnet in plate form. Typical of the type of material to be employed is anisotropic barium ferrite, having high residual induction. This magnetized ferrite material is virtually a high-resistance ceramic insulator. Radiation of U.H.F., V.H.F., and microwave frequencies can be readily transmitted through such magnetized ferrite. A further characteristic of this type of material is that it is inherently best suited for making magnets which are short in length with a large cross sectional area.

A feature of the teachings of this invention is a proper combination of material in the aforementioned antenna cover wall so that essentially zero reflection of electromagnetic waves having frequencies of microwave frequency or higher occurs on passage through said antenna cover wall. Thus, the teachings of this invention set forth an antenna cover wall which achieves passage of electromagnetic waves of U.H.F., V.H.F., and microwave frequencies therethrough with minimal attenuation and which so alters any juxtapositioned plasma medium as to permit these electromagnetic waves to pass therethrough also, with minimal attenuation.

Thus use is made of a permanent magnetic material, in sheets of definite thickness and used in precise combination with dielectric material to thereby establish a wall type structure close to, covering and thereby separat-

ing an antenna radiator of electromagnetic waves and an ionized gas plasma, through which electromagnetic waves from the antenna radiator are to be transmitted with minimal attenuation.

The combination of dielectric sheets with permanent magnetic material is particularly important in the transmission, with minimum attenuation, of electromagnetic energy through an antenna cover wall where the electromagnetic energy is of microwave frequency. Where the frequency of transmitted energy is low, e.g., telemetering frequencies of several hundred megacycles, the presence of dielectric material in combination with a magnetic material is no longer critical and if dielectric is used, reflections which cause attenuation are negligible where dielectric thickness is one-tenth or less of the electromagnetic energy wavelength.

Therefore, in situations where it is desired to transmit low frequency electromagnetic energy, the teachings of this invention provide for an antenna cover wall of a ceramic magnetic material having definite thickness and electrical properties. Where frequencies are high, however, dielectric will preferably be used in combination with the ceramic magnetic material in critically defined fashion according to the teachings herein.

The prime advantages of using a permanent magnet antenna cover wall to effect transmission of electromagnetic waves through ionized gas plasmas are: (a) the production of a magnetic field where it is needed with maximum magnetic intensity for minimum weight, close to the vehicle surface where the ionized gas plasma is most dense, i.e., just outside the antenna cover wall surface; (b) the production of a magnetic field by a uniform plane sheet of dielectric providing minimum radiation pattern distortion.

In an antenna cover wall which does not incorporate any ferromagnetic material, the reflection of an incident electromagnetic wave can be made zero by proper wall construction. The procedure is based upon making the electric thickness of each layer, or layers, such that the reflections from the various layer surface interfaces will be so phased in time-phase relation that the reflections will cancel each other.

For example, consider an electromagnetic wave which impinges upon and travels through a single dielectric sheet. Consider also that the electromagnetic wave is travelling in air before and after entering the dielectric. The dielectric constant of air can effectively be represented as some constant ϵ_1 and the dielectric constant of the dielectric sheet as some higher magnitude constant ϵ_2.

As approaching electromagnetic waves contact the air-dielectric interface, a reflection of some amount of energy of the total electromagnetic wave energy will occur. If we represent the total electric field vector of the electromagnetic wave as E, we can conveniently assign to the reflected portion a symbol $-r$. The negative polarity of the reflected energy is experienced on passing an electromagnetic wave from a medium of lower dielectric constant (air) to a medium of higher dielectric constant (dielectric medium).

The electromagnetic wave will encounter another reflection of energy after passing through the dielectric and upon reaching the dielectric-air interface. However, this reflected energy will be reversed in polarity from that of the first reflection since the electromagnetic wave now passes from a medium of higher dielectric constant to a medium of lower dielectric constant. It is convenient to assign this latter reflection the symbol $+r$.

In order that there be transmission of electromagnetic waves through such a dielectric sheet with essentially zero total reflection, the dielectric must be chosen of such definite electrical thickness that the reflected portion $(+r)$ of the electromagnetic wave will reach, on reflection, the interface of the first $(-r)$ reflection in precise time phase relationship so that the two reflections will essentially cancel each other. Thickness of such a single

dielectric sheet is necessarily $\lambda/2$ in electrical thickness, or $\lambda/2$ plus any number of half wavelengths in electrical thickness, where λ is the wavelength of the electromagnetic energy in the dielectric. Hereinafter, whenever $\lambda/2$ is designated as proper electric thickness, it is to be understood that $\lambda/2$ plus any number of half wavelengths in electrical thickness is appropriate.

The relationship between the polarity of reflected electromagnetic energy is critical. In the discussion of a single dielectric sheet above, it was determined that a dielectric sheet thickness of $\lambda/2$ would achieve total transmisson of electromagnetic energy when the polarities of reflected electromagnetic energy, experienced as the electromagnetic energy traversed the surface boundaries of the single dielectric sheet, were opposite.

Assume now that in the above illustration the electromagnetic energy passes from the dielectric sheet into a plasma medium instead of air or into another dielectric medium. Assume also that the electromagnetic energy thereby passes from a medium of lower dielectric constant, i.e., the dielectric sheet, into a medium of higher dielectric constant, i.e., the plasma medium or another dielectric sheet. Thus, the polarity of reflected energy as the electromagnetic energy leaves the dielectric sheet and passes into a medium of higher dielectric constant would be the same as the polarity of reflected energy experienced on entering the dielectric sheet from a medium of lower dielectric constant such as air. Since the polarities of reflected electromagnetic energies in this situation are the same, the thickness of such a single dielectric sheet would need to be $\lambda/4$, or $\lambda/4$ plus any number of half wavelengths, in electrical thickness to achieve total transmission of electromagnetic energy. Hereinafter, whenever $\lambda/4$ is deisgnated as proper electric thickness, it is to be understood that $\lambda/4$ plus any number of half wavelengths in electrical thickness is appropriate.

When a magnetized ferrite sheet is considered, a quite different and additional factor comes into consideration. An electromagneitc wave will always experience a reflection of its time phase electric vector on traversing a changing dielectric constant boundary, such as is encountered on entering a dielectric medium from air, or a magnetized ferrite from a dielectric. However, as an electromagnetic wave traverses a magnetized ferrite, the electric field vector of the electromagnetic wave will undergo a rotation in physical or space angular orientation as well or in addition to the reflection of energy occurring at surface interfaces of the mediums traversed.

Having considered how reflections are canceled with a sheet of simple dielectric, the problem encountered with the added element of angular rotation effected by a magnetized ferrite can be understood.

Consider therefore a magnetized ferrite having identical properties as the above dielectric. An electromagnetic wave encountering such a ferrite at air-ferrite interfaces will experience the same time phase reflection of its electric field vector as it did upon encountering air-dielectric interfaces. However, as noted above, the magnetized ferrite also produces an additional and different effect on an electromagnetic wave. On passing an electromagnetic wave through magnetized ferrite the electric field vector of the electromagnetic wave is always rotated angularly (i.e., space orientation is rotated) some number of degrees depending on the particular ferrite used.

More specifically, consider a magnetized ferrite capable of effecting an angular rotation of the electric field vector of an electromagnetic wave equal to 180 degrees in passing one way through the magnetized ferrite. If the magnetized ferrite be made $\lambda/2$ in electrical thickness and to have identical dielectric properties as the above dielectric sheet had, the effect of this ferrite will likewise be total transmission of electromagnetic wave energy.

Since the ferrite is identical to the above dielectric, transmission will be the same as far as time-phase electric field vector reflection and cancellation is concerned. Be-

cause we are now dealing with a magnetized ferrite, however, the electric field vector of the electromagnetic energy is rotated 180 angular degrees on passing through the ferrite. Similarly, any reflection of electromagnetic wave energy occurring at an interface as the electromagnetic wave leaves the ferrite and passes into another medium will be rotated an additional 180 angular degrees on passing back through the ferrite. As shown in our discussion in regard to a dielectric, it is this reflected energy which causes attenuation. However, since the ferrite has effected a total 360 degree angular rotation (or so small as to be neglected) of the electric field vector by the time the reflected electromagnetic energy reaches the point of interference (i.e., the surface of initial entry into the magnetized ferrite), the total effect is transmission as in the case of a single dielectric sheet considered above.

Using similar analysis, if a magnetized ferrite is chosen such that a 90 degree angular rotation of the electric field vector of electromagnetic waves is effected on passing one way through said magnetized ferrite, a total angular rotation of 180 degrees will result in regard to reflected energy instead of 360 degrees as in the aforementioned magnetized ferrite. 180 degrees of angular rotation will result in total reflection of approaching electromagnetic waves instead of transmission with a ferrite having the above-mentioned properties and being $\lambda/2$ in electrical thickness; the reflected electromagnetic energy from the back interface is now in phase, so as to vectorially add, with reflected electromagnetic energy at the initial interface of electromagnetic energy contact. Attenuation is thereby increased under these conditions. However, by providing a ferrite sheet electrical thickness of $\lambda/4$ under the above last mentioned conditions, attenuation is again minimized.

To produce a magnetized ferrite that has simultaneously: (1) the necessary dielectric and angular rotating properties; and, (2) the necessary electrical thickness to effect transmission with minimal attenuation of electromagnetic energy having U.H.F., V.H.F. or microwave frequency is at least difficult and costly. Only at electromagnetic energy frequencies lower than microwave frequency does it become practical to use a ferrite by itself to effect transmission with minimal attenuation.

Therefore, it is an object of the teachings of this invention to provide a practical and economical combination of dielectric and magnetized ferrite properties to achieve transmission of electromagnetic energy with minimal attenuation of electromagnetic energy.

Another object of the teachings of this invention is to achieve electromagnetic wave transmission through dense plasmas, with a small amount of attenuation, using electromagnetic wave frequencies less than the natural frequency of the free electrons within an ionized gas plasma.

Another object of this invention is the transmission of electromagnetic waves through a dense plasma with a small amount of attenuation of the electromagnetic waves, free of undesirable directionality effects and limitations on propagation range in the earth's atmosphere.

Still another object of this invention is to achieve electromagnetic wave transmission through a dense plasma with a small amount of attenuation of said electromagnetic waves, without the need for heavy magnetic field coils and pulse equipment.

Still another object of this invention is the transmission of electromagnetic waves through a dense plasma with a small amount of attenuation of the electromagnetic waves, without the need of high power electromagnetic signals.

Still another object of this invention is the proper combination of electromagnetic field means so as to effect transmission of electromagnetic waves through the magnetic field means with minimum attenuation of the electromagnetic waves.

Still another object of the invention is the combination of electromagnetic field means in close relationship to a radiator means of electromagnetic energy so as to effect transmission of electromagnetic energy through a dense plasma medium with little attenuation of the electromagnetic energy and at the same time with little attenuation of the electromagnetic energy in passage through the electromagnetic field means.

Still another object of the invention is the combination of electromagnetic field means in relationship to a radiator means of electromagnetic energy so as to effect transmission of electromagnetic energy of frequency less than microwave frequency, e.g., telemetering frequency of several hundred megacycles, through said electromagnetic field means and subsequently through a dense plasma medium with minimal attenuation.

Other objects of this invention will be apparent from the following description in which:

FIG. 1 is an illustration of one embodiment of the teachings of this invention wherein a ceramic magnetic material is affixed to a dielectric material, the combination having a definite predetermined electrical thickness in cross section.

FIG. 2 is an illustration of another embodiment of the teachings of this invention wherein a ceramic magnetic material is sandwiched between two sheets of a dielectric material, the combination having a definite predetermined electrical thickness in cross section.

FIG. 3 is a third embodiment of the teachings of this invention wherein a ceramic magnetic material is sandwiched between two sheets of a dielectric material, said sheets of dielectric material being of a predetermined electrical thickness in cross section.

FIG. 4 is a fourth embodiment of the teachings of this invention wherein a radiator of electromagnetic waves is disposed in contact with a ceramic magnetic material in predetermined arrangement.

This invention provides a magnetic field within any dense plasma through which it is desired to transmit electromagnetic waves with little attenuation. The invention comprises a particular combination of dielectric materials to allow electromagnetic waves to be transmitted through said combination and on through adjacent plasma mediums.

Referring to FIG. 1, a composite antenna wall cover **1** is disposed in cooperation with a radiator of electromagnetic waves **3**, said composite antenna wall cover **1** comprising a magnetized ferrite sheet **5** of a type of ferrite capable of effecting a 90 degree angular rotation of the space electric vector of electromagnetic waves in a one-way passage through the magnetized ferrite sheet **5**. The ratio of the permeability constant μ_5 to the dielectric constant ϵ_5 of the magnetized ferrite sheet **5** is equal to the ratio of the permeability constant μ_7 to the dielectric constant ϵ_7 of a dielectric sheet **7** bonded to said magnetized ferrite sheet **5**. The thickness in cross section of said antenna wall cover **1** of FIG. 1 is necessarily $\lambda/4$ in electrical thickness, i.e., a thickness corresponding to ¼ of a wave length of an electromagnetic wave passing through said antenna wall cover **1**. As noted earlier, where a dielectric sheet alone is considered a thickness of $\lambda/2$ is required. Because of the added effect of this particular magnetized ferrite, however, a combined thickness of $\lambda/4$ is required since a thickness of $\lambda/2$ would result in reflection rather than transmission of electromagnetic wave energy. For all practical purposes, the permeability constants of the magnetized ferrite sheet **5** and dielectric sheet **7** can be assumed as unity and thus the dielectric constants ϵ_5 and ϵ_7 are equally matched to each other.

As an electromagnetic wave approaches the antenna cover wall **1** from the left as shown and contacts the air-dielectric interface **4**, a reflection of some amount of energy of the energy of the electromagnetic wave will occur. This reflection of energy can be represented, as before, by the symbol $-r$. The reflected energy has negative electric potential, as indicated, which is measured characteristically in passing an electromagnetic wave

from a medium of lesser dielectric constant, i.e., air, to a medium of higher dielectric constant, i.e., dielectric sheet **7**. The reflected energy, $-r$, has a wave frequency which is the same as the wave frequency of the electromagnetic wave but is of lesser amplitude. In continuing through the dielectric sheet **7** and magnetized ferrite sheet **5**, no further reflection occurs since the dielectric constants of the two were made equal. At the ferrite sheet plasma medium interface **6**, however, another reflection of electromagnetic wave energy occurs. This reflection of energy is characteristically represented as a $+r$ wave. The reflected energy has positive potential, as indicated, since the electromagnetic wave now passes from a medium of higher dielectric constant, i.e. magnetized ferrite sheet **5**, to a medium of lesser dielectric constant, i.e. plasma medium. It is important at this point to consider the effect of the magnetized ferrite sheet **5** upon the angular rotation of the space electric vector of the electromagnetic wave. If the antenna cover wall **1** lacked a ferrite sheet **5**, i.e. being instead simply a dielectric sheet $\lambda/4$ in electrical thickness, a reflected wave represented as $+r$ would have resulted in total reflection of the electromagnetic waves when said $+r$ reflected energy reached interface **4** and there added vectorially to the reflected energy $-r$. As pointed out earlier, in order to effect total transmission of electomagnetic waves with a simple sheet of dielectric, the electrical thickness must necessarily be $\lambda/2$ when energy reflections occurring at consecutive interfaces are of opposite polarity. With a wall that is $\lambda/4$ in electrical thickness the total transmission which occurs under similar energy reflecting circumstances is attributable to the added effect of the included ferrite sheet **5**. The ferrite sheet **5** has been chosen to effect a 90 degree angular rotation of the space electric vector of the electromagnetic wave in a one-way passage through said ferrite sheet **5**. Therefore, the total result is angular rotation of the electric field vector of energy reflected from magnetized ferrite sheet-plasma medium interface **6** by 180 degrees. Thus, the energy reflected from magnetized ferrite sheet-plasma medium interface **6** arrives at air-dielectric interface **4** 180 degrees out of phase with energy reflections occurring at interface **4**. The electric field vectors of reflected energy thus cancel vectorially and provide for transmission of electromagnetic energy through the antenna cover wall **1** with minimal attenuation.

It is important to the teachings of this invention that a magnetized ferrite sheet **5** be used in the antenna cover wall so that a magnetic field will be produced within the plasma medium and thereby effectuate transmission of the electromagnetic wave therethrough as well.

In accordance with the teachings of this invention the angular rotation of the electric field vector of reflected electromagnetic energy occurring in a complete round trip through the antenna cover wall and back again can be multiples of 180 degrees. Also, the electric thickness of the antenna cover wall in cross section can be a quarter wave length or a quarter wave length plus any number of half wave lengths.

The embodiment as illustrated in FIG. 2 combines exactly the same principles as those outlined for the illustration of FIG. 1. In FIG. 2, an antenna cover wall **13** is disposed to cooperate with a radiator of electromagnetic waves **19**. The antenna cover wall **13** comprises a magnetized ferrite sheet **15** sandwiched between and bonded to two dielectric sheets **17**. Said antenna cover wall **13**, although illustrated here as $\lambda/4$ in electrical thickness, can be $\lambda/4$ plus any number of half wave lengths in total electrical thickness. As long as the total combined thickness of antenna cover wall **13** does not deviate from $\lambda/4$ or $\lambda/4$ plus any number of half wave lengths there is complete freedom for variable thicknesses in each dielectric sheet **17** and magnetized ferrite sheet **15**. The dielectric constant of the ferrite sheet **15** and dielectric sheets **17** in FIG. 2 must necessarily be identical. Since this is so, there will be energy reflections at surfaces **16** and **18** only, and cancellation of energy reflections at surface interface **16**. The embodiments of FIG. 2 allows, therefore, for thermal insulation of the magnetized ferrite sheet **15** through use of a second dielectric sheet **17** as differentiated from the single dielectric sheet combination of FIG. 1.

Referring to FIG. 3, a composite antenna wall cover **19** is disposed to cooperate with a radiator of electromagnetic waves **33**, said composite antenna wall cover **19** comprising a magnetized ferrite sheet **21** of a type of ferrite in which the degree of angular rotation of the space electric field vector of electromagnetic waves effected in a one-way passage through said ferrite sheet **21**, is arbitrary and not critical. The magnetized ferrite sheet **21** is sandwiched between and bonded to dielectric sheets **23**, and it is necessary to this particular embodiment that the dielectric constant ϵ_{21} of the magnetized ferrite sheet **21** be equal to the dielectric constant ϵ_{23} of the dielectric sheet **23** raised to the second power; i.e. $\epsilon_{23}=\sqrt{\epsilon_{21}}$.

In the embodiment of FIG. 3 the electrical thickness of each dielectric sheet **23** should be $\lambda/4$ in electrical thickness as illustrated or $\lambda/4$ plus any number of half wave lengths in electrical thickness. The thickness of magnetized ferrite sheet **21** is arbitrary. The composite antenna wall cover is so constructed as to effect complete transmission of electromagnetic waves passing through it, while allowing for total freedom in the amount of angular rotation of the electric field vector occurring in passage of the electromagnetic wave through the magnetized ferrite sheet **21** of the composite antenna cover wall **19**.

In the embodiment shown as FIG. 3, an approaching electromagnetic wave, as before, can be represented by a measurable positive field vector $+E$. As the electromagnetic wave approaches the antenna cover wall **19** from the left as shown and contacts a first air-dielectric sheet interface **25**, a first reflection of some amount of energy of the energy of the electromagnetic wave will occur. This first reflected energy is represented by a symbol $-r$. The negative potential is, as discussed above, measured on passing an electromagnetic wave from a medium of lesser dielectric constants, i.e. air, to a medium of high dielectric constant, i.e. dielectric sheet **23**.

In continuing through the dielectric sheet **23**, the electromagnetic wave undergoes a second negative potential energy reflection, $-r'$, as the electromagnetic wave passes at interface **31** from the medium of a lower dielectric constant, ϵ_{23}, provided by dielectric sheet **23** into a medium of higher dielectric constant, ϵ_{21}, provided by magnetized ferrite sheet **21**. Since both energy reflections have the same potential, it is necessary considering prior analysis that dielectric sheet **23** have an electrical thickness in cross section of $\lambda/4$ so that the second reflected energy wave, $-r'$, will completely cancel any first reflected energy wave, $-r$, when said second reflected energy wave reaches the first dielectric-air interface **25**, as shown in FIG. 3. Total cancellation is achieved providing the ratios of the dielectric permeability constants of the combined materials are chosen so that the magnitude of the reflections occurring at consecutive interfaces are equal.

In continuing through the ferrite sheet **21** the electromagnetic wave experiences another energy reflection at the ferrite-dielectric interface **27**. This time, the reflected energy has a positive potential, $+r$, since the electromagnetic wave passes from a medium of higher dielectric constant, ϵ_{21}, to a medium of lower dielectric constant, ϵ_{24}. The same polarity of electrical potential as represented by $+r'$ is realized when further reflection at interface **29** takes place as the electromagnetic wave passes from the dielectric sheet **24** into a medium with lower dielectric constant such as air or plasma. As with the negative potential reflections described above, the $\lambda/4$ electrical thickness of the dielectric sheet **24** also allows the reflected energy, $+r'$, to reach the ferrite-dielectric interface **27** so spaced in time phase vector orientation as to effec-

tively cancel any further reflection of electromagnetic waves occurring there.

As operating conditions change, the desirable features of FIG. 3 become apparent. For example, assume that a plasma medium forming interface **29** with dielectric sheet **24** has a higher dielectric constant than dielectric sheet **24**. The energy reflections occurring at interface **29** as electromagnetic energy passes from a lower dielectric constant medium to a higher one will be opposite in polarity to those reflections occurring at interface **27** where electromagnetic energy passes from a higher to a lower dielectric constant medium. Therefore, in order to achieve cancellation of energy reflections at interface **27** with energy reflected from interface **29**, a dielectric sheet **24** must be made to have a thickness in cross-section of $\lambda/2$ in electrical thickness. Such a dielectric sheet can readily be made a part of FIG. 3 in place of dielectric sheet **24**, shown as $\lambda/4$ in electrical thickness. Therefore, various thicknesses of dielectric sheet **24** may be utilized in proper combinations which provide reflected energy cancellation under differing operating conditions. The total effect is therefore accomplished of passing electromagnetic waves through a magnetic field producing antenna cover wall **19** with no reflection of the electromagnetic waves. Also, the embodiment in FIG. 3 is not restricted to a ferrite **21** of arbitrary but uniform thickness but may comprise a ferrite sheet of varying and non-uniform thickness bonded to and sandwiched between two dielectric sheets **23** and **24**, $\lambda/4$ in electrical thickness, or dielectric sheet **23**, $\lambda/4$ in electrical thickness and dielectric sheet **24**, $\lambda/2$ in electrical thickness, as operating conditions dictate.

The teachings of this invention are not restricted to the idea of producing a magnetic field using a magnetized disc or sheet of ferrite; stronger magnetic fields can be produced when the ferrite material is contained in the form of a right circular, rectangular or arbitrary shaped container, which has a length to diameter ratio of unity or greater. In antenna radiator design, it is possible to reduce the physical size of certain radiators by totally filling the volume surrounding the radiator element with a dielectric material of low electrical loss. In the sense the word is commonly used in the electrical art, the antenna radiator is said to be "potted."

Referring to FIG. 4, electromagnetic wave transmission through dense plasmas is achieved by a radiator **33** of electromagnetic energy mounted in a metal container **35**, said radiator **33** being completely contained within said metal container **35**. Radiator **33** may be any of several types known in the art; a metal helix for example or the well known dipole radiator. The metal container **35** is entirely filled with a ferrite material **37**, said ferrite material **37** being of the type which can be permanently magnetized in the direction of propagation of the electromagnetic field **39**. The metal container **35** is normally, and preferably, made of non-ferromagnetic material. The embodiment of FIG. 4 can effectively achieve transmission of electromagnetic energy through a dense plasma with or without the incorporation of a dielectric sheet **40** with its planar surface disposed within the path of the electromagnetic energy. Presence of a dielectric sheet **40** is not necessary because the strong magnetic field achieved with embodiment FIG. 4 accomplishes transmission of electromagnetic energy in spite of any interface reflections. However, dielectric sheet thickness in accordance with the above teachings will effectively eliminate energy reflections where such is desired.

Since numerous changes may be made in the above apparatus and different embodiments may be made without departing from the spirit and scope thereof, it is intended that all matter contained in the foregoing description or shown in the accompanying drawings shall be interpreted as illustrative and not in a limiting sense.

I claim as my invention:

1. A composite antenna cover wall of a thickness in cross section of $\lambda/4+k(\lambda/2)$ in electrical thickness where k is zero or any whole number, said composite antenna cover wall being capable of effecting electromagnetic energy transmission through a dense plasma medium with a minimum of attenuation of electromagnetic energy comprising:

(a) at least one sheet of ceramic magnetic material having a permanent magnetization and thickness of such magnitudes to effect a 90-degree angular rotation of the space electric vector of electromagnetic energy in a one-way passage through said ceramic magnetic material;

(b) at least one sheet of a simple dielectric material affixed to said sheet of ceramic magnetic material wherein said at least one sheet of a simple dielectric material is of a type such that the ratio of the permeability constant to the dielectric constant of the ceramic magnetic material is equal to the ratio of the premeability constant to the dielectric constant of the dielectric material.

2. The composite antenna cover wall defined in claim **1** wherein said composite antenna cover wall is

$$\lambda/2+k(\lambda/2)$$

in electrical thickness where k is zero or any whole number, and said ceramic magnetic material is a ferrite having a permanent magnetization and thickness of such magnitudes to effect a 180-degree angular rotation of the space electric vector of electromagnetic energy in a one-way passage through said ceramic magnetic material.

3. A composite antenna cover wall for an antenna radiator of electromagnetic energy, said composite antenna cover wall having a thickness in cross section of

$$\lambda/4+k(\lambda/2)$$

in electrical thickness where k is zero or any whole number, disposed for effecting electromagnetic energy transmission from said antenna radiator of electromagnetic energy through a dense plasma medium with a minimum of attenuation of electromagnetic energy, said antenna cover wall comprising:

(a) at least one sheet of a ceramic magnetic material having a permanent magnetization and thickness of such magnitudes to effect a 90-degree angular rotation of the space electric vector of electromagnetic energy in a one-way passage through said ceramic magnetic material, said ceramic magnetic material sandwiched between and bonded to;

(b) two sheets of a simple dielectric material of a type such that the ratio of the permeability constant to the dielectric constant of the ceramic magnetic material is equal to the ratio of the permeability constant to the dielectric constant of the dielectric material.

4. The composite antenna cover wall defined in claim **3** wherein said antenna cover wall is $\lambda/2+k(\lambda/2)$ in electrical thickness where k is zero or any whole number and said ceramic magnetic material is a ferrite having a permanent magnetization and thickness of such magnitudes to effect a 180-degree angular rotation of the space electric vector of electromagnetic energy transmitted from the antenna radiator of electromagnetic energy in a one-way passage through said ceramic magnetic material.

(References on following page)

References Cited by the Examiner

UNITED STATES PATENTS

2,968,807	1/1961	Troost et al.	343—787
3,176,228	3/1965	Phillips et al.	343—705 X

FOREIGN PATENTS

538,388	3/1957	Canada.

OTHER REFERENCES

"The Use of Magnetic Fields in the Elimination of the Re-Enery Blackout," Hodara, Proc. IRE, vol. 29, December 1961, TK 6700 7, pp. 1825 to 1830.

"Fields and Waves in Modern Radio," Ramo and Whinnery, John Wiley and Sons, New York, 1953, QC 670 R3, pp. 290 to 293.

"Microwave Engineering," Harvey, Academic Press, New York, 1963, QC 670 H38, pp. 670–672.

HERMAN KARL SAALBACH, *Primary Examiner.*

M. NUSSBAUM, *Assistant Examiner.*