(19) Europäisches Patentamt
European Patent Office
Office européen des brevets

(11) Publication number: **0 046 395**
A1

(12) EUROPEAN PATENT APPLICATION

(21) Application number: **81303732.2**

(22) Date of filing: **17.08.81**

(51) Int. Cl.³: **H 05 B 41/38**

(30) Priority: **18.08.80 GB 8026864**

(43) Date of publication of application: **24.02.82 Bulletin 82/8**

(84) Designated Contracting States: **DE FR NL**

(71) Applicant: **The General Electric Company Limited, 1 Stanhope Gate, London W1A 1EH (GB)**

(72) Inventor: **Parker, Peter David, 82A Dartford Road, Dartford Kent (GB)**
Inventor: **Britton, John, The Homestead Glebe Lane, Gnosall Stafford (GB)**

(74) Representative: **Kirby, Harold Victor Albert, Central Patent Department The General Electric Company Limited Hirst Research Centre East Lane, Wembley Middlesex HA9 7PP (GB)**

(54) Dimming systems for electric lamps.

(57) A lighting installation having at least one lamp unit (15) designed to incorporate one or more fluorescent electric discharge lamps (19) operable from an a. c. supply is associated with a remotely controllable device Fig. 1 for dimming the lamp or lamps, the device comprising a signal responsive means (3) responsive to signals superimposed on the a. c. mains supply to the lamp or lamps for controlling the light output thereof, and a remotely positioned control device (C) for generating said signals.

A plurality of controllable devices may be controlled independently by a single control device, such that different parts of a room or building may be differently illuminated.

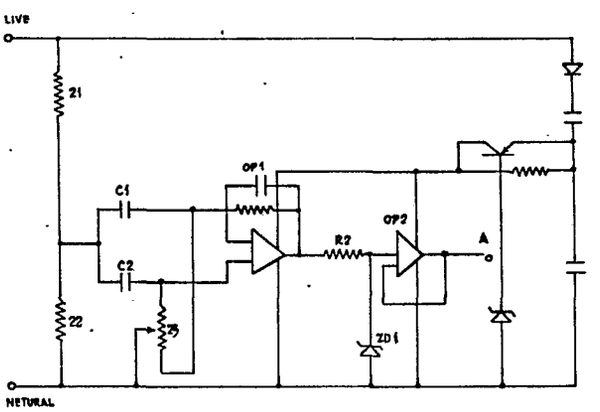

EP 0 046 395 A1

This invention relates to lighting installations incorporating one or more fluorescent electric discharge lamps operable on an a.c. supply, and is concerned especially with such lighting installations incorporating means for dimming the lamp or lamps.

It is known to provide a dimming system for high energy discharge lamps in which control signals are sent to lamp units via an additional conductor. Consequently the installation of such a system, particularly in a large building such as a library where there are many lamps, would involve the expensive provision of an extra conductor to each lamp unit.

It is an object of this invention to provide a lamp dimming system which does not require an additional conductor.

According to this invention in a lighting installation comprising at least one lamp unit designed to incorporate one or more fluorescent electric discharge lamps operable from an a.c. supply, and associated with a remotely controllable device for dimming the lamp or lamps, said device comprises a signal responsive means responsive to signals superimposed on the a.c. supply to the lamp or lamps for controlling the light output thereof, and a remotely positioned control device for generating said signals.

A preferred control device suitable for use with a controllable device in a lighting installation in accordance with the invention is disclosed in U.K. Patent Specification No. 1500891. This is a digital cyclocontrol device which transmits information by altering the voltage waveform of the a.c. supply at or adjacent to the zero crossing point of selected cycles. Such a control device has the advantage that it causes imperceptible perturbations in the mains supply because alteration of the waveform takes place

near to the zero crossing point. Thus a lamp connected to the controllable device is not observed to flicker.

A plurality of remotely controllable devices may be controlled independently by a single remotely positioned control device by making them responsive to different signals generated by the latter. By this means illumination can be arranged to be greater in some parts of a room or building than in others; for example to compensate for variations in natural light or to cater for different requirements at various times of the day.

Thus a lighting installation in accordance with the invention may comprise a plurality of lamp units, and a plurality of said remotely controllable devices each associated with a respective one or more of said units, and in which the controllable devices are responsive to different signals generated by the control device, whereby the light output from the lamp unit or units associated with different controllable devices can be separately controlled.

The controllable device conveniently includes a slope detector arranged to produce an output pulse when the slope of the voltage waveform of the a.c. supply at or adjacent the zero crossing point is altered by more than a predetermined amount as determined by the control device, and means responsive to a predetermined pattern of pulses for activating the device to control the associated lamp or lamps in dependence upon a further pattern of pulses.

This invention is now further described by way of an example with reference to Figures 1 to 3 of the accompanying drawings, which show the constituent elements of a controllable device employed in a lighting installation according to the invention.

Figure 1 shows in block diagrammatic form

the circuit of the controllable device,

Figure 2 shows a circuit diagram of a form of analogue slope detector for use in the device, and

Figure 3 shows the lamp control unit employed in the device.

Referring first to Figure 1, control signals to the controllable device are impressed on the a.c. mains supply as described in Patent Specification No. 1500891 by modifying the voltage waveform of the a.c. supply at or adjacent the zero crossing point by a remotely positioned control device shown diagrammatically at C. The signals are fed over the a.c. supply conductors to an analogue slope detector 3 which generates control pulses when the slope of the voltage waveform is altered by more than a predetermined amount as determined by the remotely positioned control device C. The output from the detector is in the form of digital control signals having a baud rate determined by the supply frequency. The coding as determined by the control device is in the form of :-

a unique recognition bit pattern i.e. a pattern not used in the following word. The form used is a bit pattern of I's having one bit more than the standard word length employed for lamp control, followed by a 0; for example for a 12 bit byte, the recognition pattern will have thirteen I's and then a 0;

a receiver identification and common word, comprising three bytes each of four bits, the first byte of which identifies the required controllable device so that only devices which have been correctly coded will receive and act on the following two byte command instruction.

This means that if a four bit byte is used the 16 different lamp responses could be

programmed. The remaining two bytes contain two separate instructions: that the lighting level shall change to a level determined by the second byte of the word and that the change shall be at a rate determined by the third byte of the word.

The controllable device essentially comprises three parts; the analogue slope detector, together with a logic decoder and a lamp control unit.

The analogue slope detector, shown in more detail in Figure 2, serves to determine the slope of the mains supply at the zero crossing point in known manner, giving a positive output when the slope exceeds a predetermined value.

The detector comprises a voltage divider provided by resistors 21, 22 for reducing the mains supply voltage, the reduced voltage being fed to two different differentiating circuits provided by capacitors C1, C2 and a potentiometer 23, balanced to give a zero output for an undistorted mains supply, and a difference output for a modulated supply. The output is fed into a high gain amplifier OPI having a low frequency pass characteristic cut-off at approximately 2 kilohertz. The output of this amplifier is clipped to the logic levels by resistor R2 and zener diode ZD1 and buffered by a voltage follower OP2.

The slope detector could be replaced in known manner by a phase-locked loop which would increase the signal-to-noise discrimination. Either circuit could also be time gated on the output to increase noise immunity.

The logic decoder is used to translate the output from the analogue slope detector into a power control signal.

Thus the signal from the analogue slope detector (3) (Fig. 1) resets a monostable (4) that has

a time constant slightly longer than the mains period. This output enables a divide-by-thirteen counter (5). The output of the divide-by-thirteen counter (5) is then used to enable a monostable (6) with a time constant slightly longer than twelve mains cycles. This enables a twelve bit serial-parallel converter (7). The function of this first part allows the controllable device to accept a twelve-bit word after having received a sequence of thirteen consecutive pulses which triggers the device.

The first four-bit byte is sent to a unit identity decoder (8). This block is hard-wired to accept a certain four bit pattern. If the input signal agrees with this predetermined address then the output enables an eight-bit latch (9) which transfers the rest of the twelve-bit word through to the following logic circuit where it is held unchanged until the unit is again addressed. One of the two bytes transferred determines the rate of change of light output and the other determines the final steady light level of an associated lamp. The rate byte is sent to programme a variable, divide-by-N, up/down counter (10). This divides the output of clock (13) and sends the result as a varying four-bit word to a comparator (2). (Note that the rate word may be decoded to give different weightings to N e.g. linear or logarithmic). The other inputs to this comparator (2) are fed from a counter (11) which inputs from a clock (12) running at a frequency just less than 32 times the mains frequency. This counter is cleared by a mains zero crossing detector (14) every half cycle. The effect of this is to divide each mains cycle into 16 time intervals. The output A=B from the comparator 2 is fed into the power control unit. This in effect gives a pulse to fire the lamp control unit (15) at a timed interval after the mains zero crossing point. The output from the programmable

counter is also fed into a comparator 1 which compares it with the input word that determines the signal steady level. The output A=B of comparator 1 is used to disable the programmable counter hence, when the counter reaches the same value as the final level, the counter is stopped and no further change occurs. This comparator's A<B output is also used to control the up/down line on the programmable counter, ensuring that the light level increases or decreases in the correct manner. The final output is a pulse at a controlled interval after the zero crossing point which is advanced or retarded at the required rate to the final required value.

Figure 3 shows the lamp control unit (15) incorporating a conventional switch start circuit for a fluorescent electric discharge lamp (19) having a ballast choke B in series with it in the usual way. The starter switch (16) is shown dotted since this may or may not be used, as the lamp control unit can be used as a starter as well as a lamp dimmer. The lamp control unit incorporates a logic circuit (24) which sends out pulses at an interval after the mains zero crossing as determined by the decoder input. The transistor (17) is thereby pulsed and fires the thyristor (18). The thyristor then causes the lamp (19) to be shorted out through the diode bridge (20), the lamp arc is thereby extinguished and a heavy heater current flows through the lamp cathodes (E) keeping them hot. This current stops at the end of the half cycle, the lamp re-ignites on the next half cycle when it is again extinguished at the appropriate point in the waveform.

Such an arrangement has the advantage that as the light output is reduced the heater current is increased and vice versa, thus tending to keep the cathode temperature near optimum at all light output levels.

With reference to the foregoing circuit description which applies to a hard-wired logic, the performance of this could be simulated in known manner by the use of a microprocessor.

A single control device C can be arranged to control the light output of, through respective controllable devices, a plurality of lamps disposed in different parts of a room or building. The control device may, for example, incorporate a microprocessor having a programme preselected to provide a light output from the individual lamps or sets of lamps of a lighting installation in dependence upon the time and/or conditions prevailing and the location of the lamps. For example the lamps may be arranged to be switched on at preselected times dependent on the time of the year, with those lamps furthest from a window being switched on first followed by the others. Moreover the lighting levels of the individual lamps may be adjusted to suit the prevailing natural lighting conditions, or other circumstances as may be desired.

CLAIMS

1. A lighting installation comprising at least one lamp unit designed to incorporate one or more fluorescent electric discharge lamps operable from an a.c. supply, and associated with a remotely controllable device for dimming the lamp or lamps, said device comprising a signal responsive means responsive to signals superimposed on the a.c. supply to the lamp or lamps for controlling the light output thereof, and a remotely positioned control device for generating said signals.

2. A lighting installation according to Claim 1 comprising a plurality of lamp units, and a plurality of said remotely controllable devices each associated with a respective one or more of said units, and in which the controllable devices are responsive to different signals generated by the control device, whereby the light output from the lamp unit or units associated with different controllable devices can be separately controlled.

3. A lighting installation according to Claim 2 wherein the control device incorporates a microprocessor programmed to provide a light output from individual lamps or sets of lamps in dependence upon the time and/or external conditions prevailing.

4. A lighting installation according to Claim 1 2 or 3 wherein the control device is arranged to generate control signals by altering the voltage of selected cycles of the a.c. supply, during a time period in a selected cycle which is a small part of the whole cycle, and which period includes a voltage zero.

5. A light installation according to Claim 4 wherein the controllable device includes a slope detector arranged to produce an output pulse when the slope of the voltage waveform of the a.c. supply

at or adjacent the zero crossing point is altered by more than a predetermined amount as determined by the control device, and means responsive to a predetermined pattern of pulses for activating the device to control the associated lamp or lamps in dependence upon a further pattern of pulses.

6. A lighting installation according to Claim 5 wherein the control device is arranged to generate a digital signal including a byte representing a recognition bit pattern, unique to a selected controllable device for initiating the operation thereof, a further byte representing an instruction pattern indicative of the required lighting level of the associated lamp or lamps, and a third byte representing a further instruction pattern representing a required rate of change of the lighting level of said lamp or lamps.

7. A lighting installation substantially as shown in and as hereinbefore described with reference to Figures 1 to 3 of the accompanying drawings.

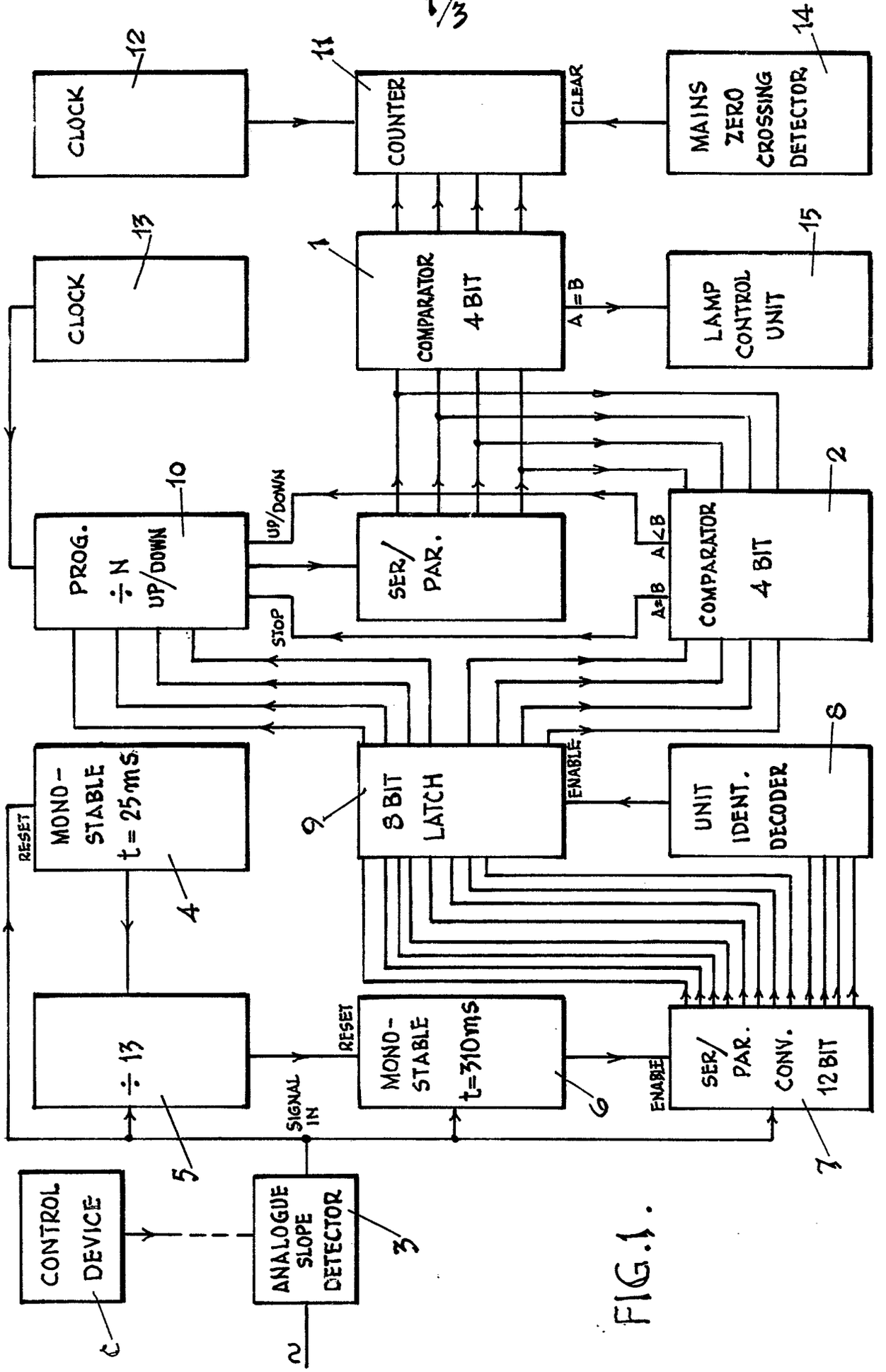
CLOCK
12
COUNTER
11
CLEAR
MAINS ZERO CROSSING DETECTOR
14
CLOCK
13
1
COMPARATOR 4 BIT
A=B
LAMP CONTROL UNIT
15
PROG. ÷ N UP/DOWN
10
UP/DOWN
SER/PAR.
A<B
A=B
COMPARATOR 4 BIT
2
STOP
RESET
MONO-STABLE t = 25 ms
4
8 BIT LATCH
9
ENABLE
UNIT IDENT. DECODER
8
÷ 13
5
RESET
MONO-STABLE t=310ms
6
ENABLE
SER/PAR. CONV. 12 BIT
7
SIGNAL IN
CONTROL DEVICE
1
ANALOGUE SLOPE DETECTOR
3
2

FIG.1.

0046395

FIG.2.

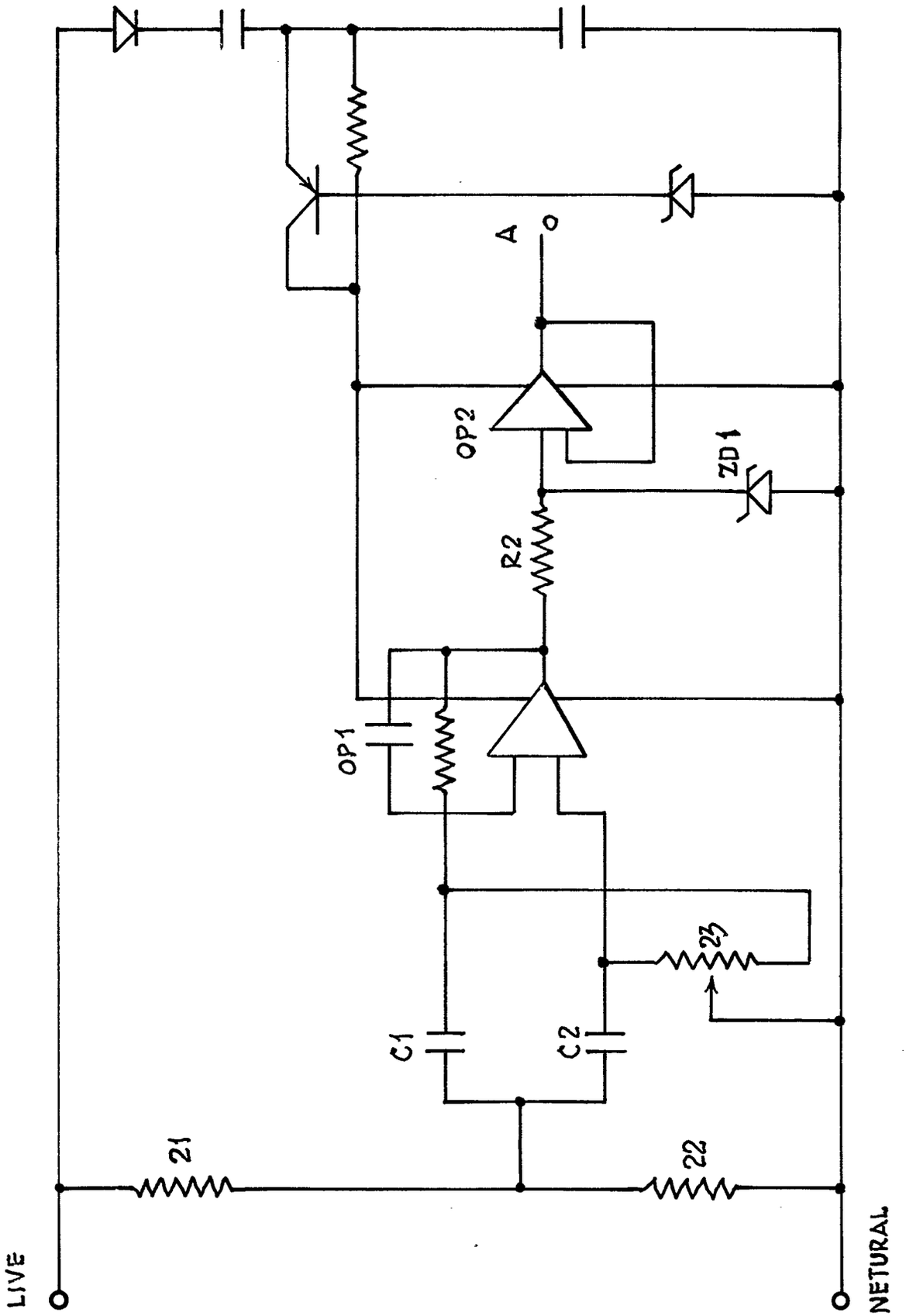

0046395

FIG.3

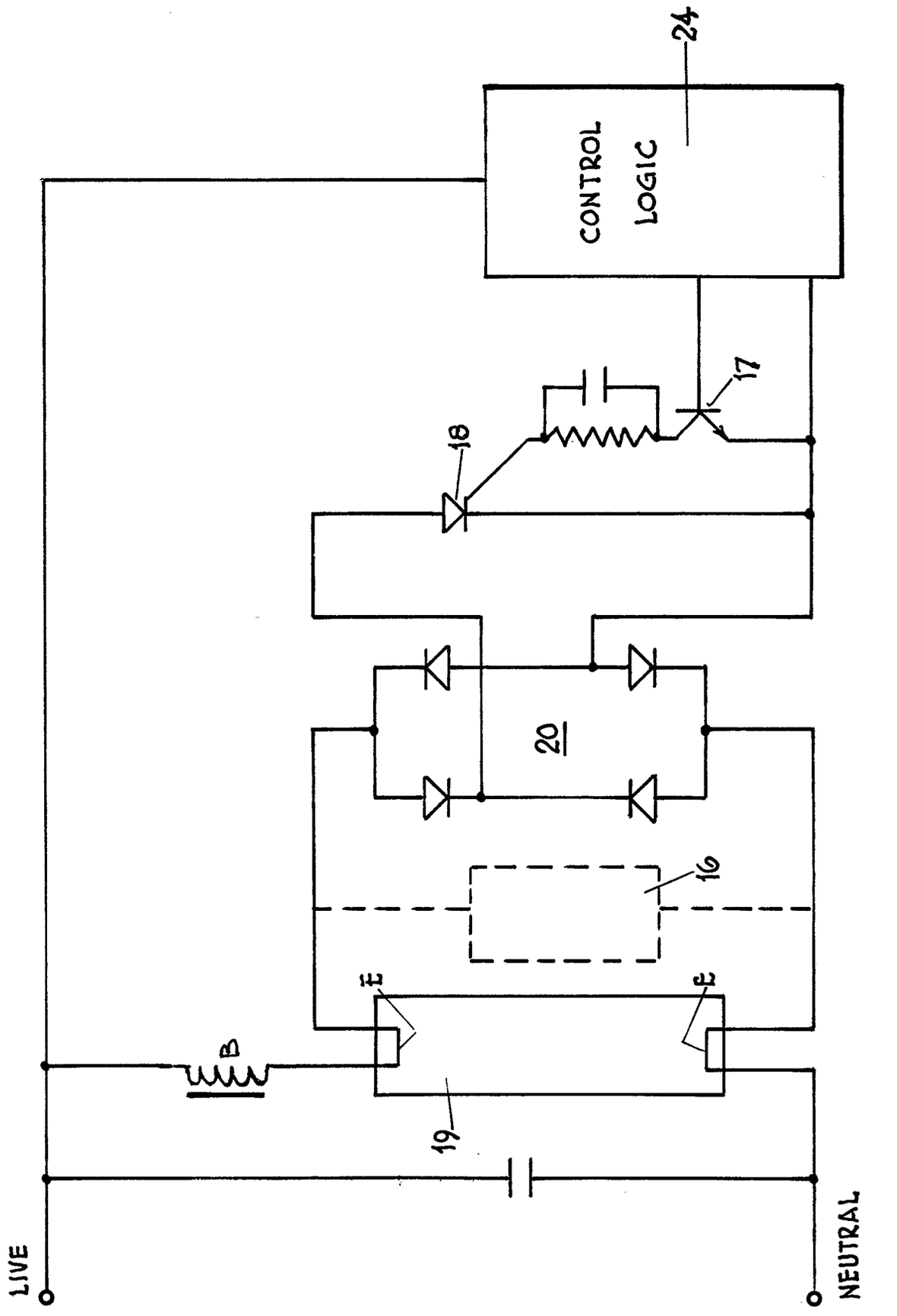

European Patent Office

EUROPEAN SEARCH REPORT

Application number
0046395
EP 81303732.2

DOCUMENTS CONSIDERED TO BE RELEVANT

Category	Citation of document with indication, where appropriate, of relevant passages	Relevant to claim
	GB - A - 2 018 532 (ESQUIRE INC.) * Abstract; fig. 2; page 2, lines 22-52; page 4, lines 1-24; claims 4,7 *	1-6
A	US - A - 3 970 893 (BRYANT) * Abstract; column 1, lines 6-68; column 2, lines 1-30 *	
D,A	GB - A - 1 500 891 (G.E.C.) * Fig. 1 *	1,5

CLASSIFICATION OF THE APPLICATION (Int. Cl.³)

H 05 B 41/38

TECHNICAL FIELDS SEARCHED (Int. Cl.³)

H 05 B 41/00
H 05 B 3/00
H 02 J 3/00
H 02 J 4/00
H 04 B 1/00

CATEGORY OF CITED DOCUMENTS

X: particularly relevant
A: technological background
O: non-written disclosure
P: intermediate document
T: theory or principle underlying the invention
E: conflicting application
D: document cited in the application
L: citation for other reasons

&: member of the same patent family, corresponding document

X The present search report has been drawn up for all claims

Place of search	Date of completion of the search	Examiner
VIENNA	12-11-1981	VAKIL

EPO Form 1503.1 06.78