Dec. 24, 1963 H. T. GREEN 3,115,119

HUBBED WASHER OVERFLOW INK COLLECTOR

Original Filed Aug. 24, 1959

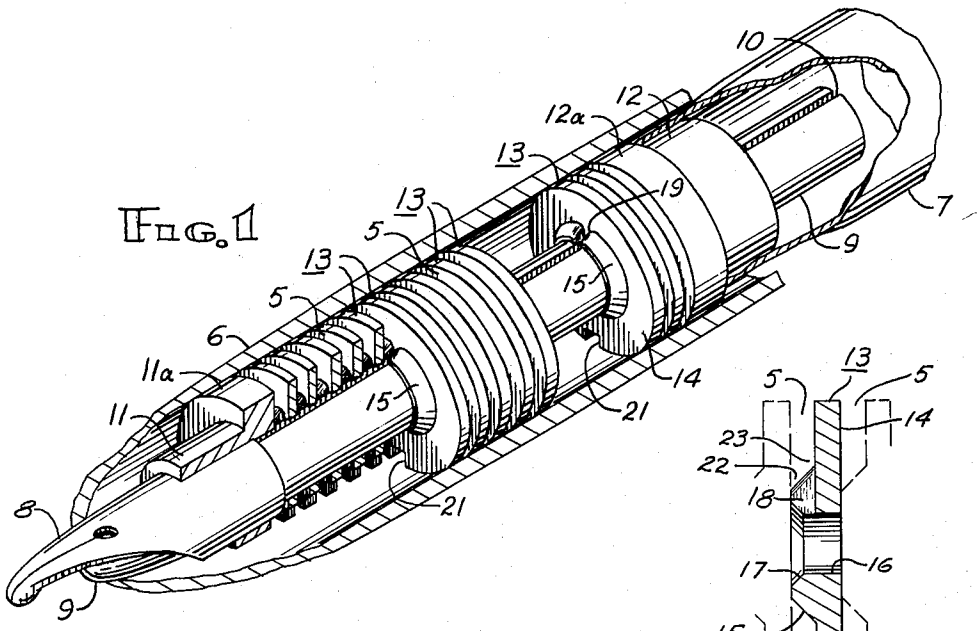

FIG. 1

FIG. 2

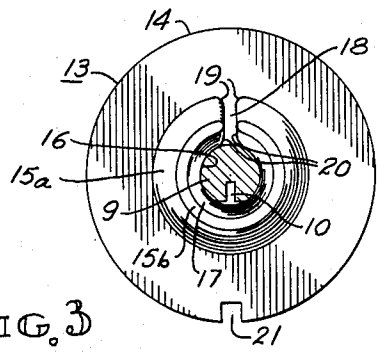

FIG. 3

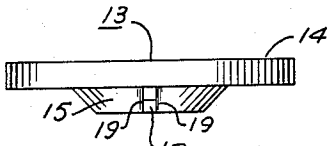

FIG. 4

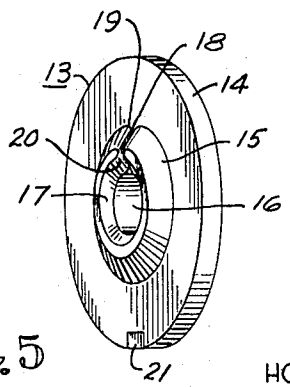

FIG. 5

INVENTOR.
HOMER THEODORE GREEN
BY
Howard M Herriot
ATTY.

United States Patent Office 3,115,119 Patented Dec. 24, 1963

3,115,119

HUBBED WASHER OVERFLOW INK COLLECTOR

Homer Theodore Green, Milton, Wis., assignor to The Parker Pen Company, Janesville, Wis., a corporation of Wisconsin

Continuation of application Ser. No. 835,564, Aug. 24, 1959. This application May 2, 1961, Ser. No. 107,269
5 Claims. (Cl. 120—50)

This invention relates in general to fountain pen ink overflow collector devices, and in particular to a hubbed washer overflow collector device. This application is a continuation of application Serial No. 835,564 filed August 24, 1959, now abandoned.

A collector has storage cells which are connected to the ink feed passage of the fountain pen. The function of storage cells is to, upon the occurrence of a flooding condition, pull ink by capillary action from the ink feed passage into the storage cells. In this way, the cells take up the excess of ink flowing in the feed passage to thereby prevent leaking of ink from the writing point.

It is an object of this invention to provide means for assuring highly efficient transfer of ink from the feed passage into the overflow storage cells.

Another object is to provide such means wherein there is a transfer passage connecting the feed passage and an overflow cell, and there is a nonabrupt merger joining the feed passage and the transfer passage, and other nonabrupt merger joining the transfer passage and the overflow cell, the overflow cell having infinite capillarity in a portion thereof contacting the transfer passage.

It is a further object to provide a highly effective overflow collector as just set forth wherein it comprises a plurality of hubbed washers assembled onto a feed bar.

A still further object is to provide such an overflow collector wherein the transfer passage has a complete perimeter to permit a meniscus to establish thereabout for effectively pulling ink therethrough.

Other objects and advantages will appear from the following description when read in connection with the accompanying drawings, wherein:

FIG. 1 is a perspective view, partly cut away and partly in section, with some parts removed, of a fountain pen embodying the invention;

FIG. 2 is a sectional view of one washer component of the invention, and further shows in broken lines the positioning of two adjacent washers;

FIG. 3 is a front elevational view of said one washer, and further shows, in section, the feed bar;

FIG. 4 is a top plan view of said one washer; and

FIG. 5 is a perspective view of said one washer.

Referring to FIG. 1, there is shown a fountain pen including a hood or shell **6** which houses the feed section of the pen, and a vacuum reservoir **7**, such as for example a flexible rubber sac, which may be compressed and released for filling the reservoir with ink. A writing point or nib **8** overlies a feed bar **9** which has an ink feed passage **10** therein. A tube **11** holds the nib on the forward end of the feed bar. The tube **11** has a flange **11***a*. Another tube **12**, having a flange **12***a* is mounted near the rearward end of the feed bar. Mounted on the feed bar, between the flanges **11***a* and **12***a*, are a plurality of washers **13** which form a novel overflow collector device.

Each of the washers **13** includes an annular fin portion **14** with an annular hub portion **15** of generally conical shape projecting from one side thereof. A bore **16** extends centrally through the washer. A transfer groove **18** extends radially through the hub interconnecting the bore **16** with the space around the hub referred to as the overflow cells.

The washers are placed on the feed bar with all the hub portions facing the same direction, for example, all

facing forwardly, as is shown in the drawings. Each of the washers contacts the next adjacent ones, as is shown in FIG. 2, the hubs **15** acting as spacers to space the fins **14** apart to form overflow cells **5** between fins. Each hub **15** has its end face **15***b* up against the washer next forwardly thereof. FIG. 1 shows some of the washers removed, for illustrative purposes only, it being understood that each fin **14** is spaced from adjacent fins a distance equal to the axial dimension of the hub. Each overflow cell **5** has its side walls formed by the fins **14** and has its bottom formed by a peripheral surface **15***a* of a hub **15**. FIG. 1 also shows some of the forwardly disposed washers partially cut away, for illustrative purposes only.

Each of the washers has, in the bore **16** at the outer (forward) end of the hub, a tapered enlargement **17** of the bore **16**. This insures good ink transfer from the feed passage **10** to the transfer groove **18** regardless of whether or not there is alignment therebetween, because an annular space is thus formed with the feed bar **9**. FIG. 1 shows passage **10** in alignment with groove **18**. They may be out of alignment, however, as is shown in FIG. 3, and yet good ink transfer will occur, due to the annular space provided by tapered enlargement **17** of bore **16**. The surface of the bore **16** defining the enlargement **17** is generally conical in shape tapering inwardly toward an apex at the rear of the pen as contrasted to the conical surface **15** which tapers inwardly toward an apex toward the front of the pen.

The walls of the transfer groove **18** are formed with smooth, nonabrupt mergers with the surface **15***a* of hub **15**, and with the bore **16**, respectively, as shown by nonabrupt mergers **19** and **20**, respectively. "Nonabrupt," as used herein, means a corner less severe than a square corner, i.e. a corner having a turn which is either a curve or an obtuse angle, rather being a sharp acute angle turn of ninety degrees or less. The provision of the nonabrupt mergers **19** and **20** aids the transfer of ink from the bore **16** into the transfer groove **18** and thence from the transfer groove **18** into the overflow cell **5**. The ink negotiates the gentle turns around the nonabrupt mergers or junctions much easier than it could negotiate the severe turns about an abrupt or sharp junction or merger.

Surface **15***a* of hub **15** is tapered, as shown, from a larger diameter at its inner end next to the fin to a smaller diameter at its outer end. Surface **15***a* thus, at the large diameter end of the hub, meets with fin **14** in an obtuse angle turn **23** to form a nonabrupt merger therewith. This nonabrupt turn **23** enhances ink transfer from surface **15***a* to the forward wall of fin **14**. At the small diameter end (forward end) of the hub, surface **15***a* forms an acute angle with the rear wall of the fin of the next adjacent washer, thereby providing a sharp V-shaped space **22** therebetween. The factors affecting the height of capillary rise of a liquid along a channel depend not only on characteristics of the liquid and of the material defining that channel, but also on the configuration of the channel. Therefore, a given combination of an ink and a fountain pen wherein the factors of the liquid and structural material characteristics are static the height of capillary rise (i.e. the capillary strength) will depend on the configuration of the capillary structure, and, more particularly, will increase upon a decrease of the distance between walls that form a channel, and as that wall-to-wall distance approaches zero, the capillary strength will approach a maximum or infinite strength. Accordingly, the sharp V-shaped space **22** provides an infinite capillary, tending to maintain ink therein at all times, thereby maintaining the overflow cell **5** always wetted and thus ready to start absorbing overflow ink instantly upon demand. If desired, instead of tapering the hub (or in addition to tapering), the hub may be provided with (1) a radius at the outside diameter of its forward end, and with (2) a

fillet at the outside diameter of its rearward end, to thereby provide (1) an infiinite capillary at the entrance to the overflow cell and (2) a nonabrupt merger of cell floor and cell wall for easy transfer from the cell floor to the cell wall as just described.

Each of the washers **12** has, in periphery of the fin **14**, an air channel **21**. The air channel is disposed diametrically opposite the ink transfer groove **18**. The washers are aligned so that the channels **21** align to form an air channel vent longitudinally through the collector device.

The transfer groove **18** extends only through the hub **15**, and does not extend through the fin portion **13** of the washer, which forms a rear end wall for the groove. When the washer abuts another washer forwardly thereof, the adjacent washer forms a forward end wall for the groove. Thus, with the washers assembled in place on the feed bar, each transfer groove **18** is bounded not only by its own two side walls but also by two end walls. There is thus a complete four wall perimeter for the formation of a meniscus thereabout, and the transfer of ink through the groove is therefore enhanced.

I claim:

1. In a fountain pen, the combination of an ink reservoir, a writing point, a feed bar providing a feed passageway connecting said reservoir and said point, and an overflow ink collector connected to said passageway intermediate said point and said reservoir, said collector comprising a plurality of washers assembled on said feed bar, annular means assembled on said feed bar between adjacent pairs of said washers and defining with said washers a plurality of capillary chambers between said washers and outwardly of the annular means and for controllably feeding ink from said feed passageway to the chambers between said washers, the outer periphery of each of said annular means joining a face of an adjacent washer at an acute angle to define a space in said chamber having infinite capillarity and further having a radial transfer groove therein connecting said feed passageway with said space of infinite capillarity, the walls of said radial transfer groove nonabruptly connecting with the walls of said feed passageway to provide free access of ink between said feed passageway and the space of infinite capillarity in said associated chamber, whereby to maintain ink therein at all times.

2. In a fountain pen including an ink reservoir, a writing point, and a feed bar with a longitudinal ink feed passage connecting the reservoir and the point, an overflow ink collector connected to the feed passage intermediate the reservoir and the point, said collector comprising a plurality of centrally bored annular fin members and separating hub members assembled in alternating abutting relation transversely on the feed bar to define a plurality

of annular capillary cells between said fin members, each of said hub members having a bore with a tapered enlargement whose surface defines with the outer surface of said feed bar an annular capillary chamber that terminates at one end at an acute angle in raidal cross section, each of said hub members having an outer periphery that joins an adjacent fin member at an acute angle to form therebetween an annular bottom of V-shaped radial cross section to the cell defined between the adjacent fin members separated by said hub member, and each of said hub members having a capillary transfer groove extending radially through said hub member and connecting said annular chamber and said annular cell.

3. In a fountain pen including an ink reservoir, a writing point, a feed bar with a longitudinal ink feed passage connecting the reservoir and the point, an overflow ink collector connected to the feed passage intermediate the reservoir and the point, said collector comprising a plurality of centrally bored hubbed washers assembled in abutting relation transversely on said feed bar, each of said washers having an annular fin portion and a frustoconical hub portion projecting from one side thereof with a capillary transfer groove extending radially through said hub portion, and with the bore of each hub portion having a tapered enlargement, the washers being oriented on said feed bar with the conical face of the hub portion of each washer abutting the annular fin portion of a next adjacent washer to define between each pair of fin portions an annular capillary cell that terminates in annular V at its inner periphery and to define between the surfaces of the feed bar and of the tapered enlargement of the bore of the hub portion an annular capillary chamber that terminates at one end at an acute angle in radial cross section.

4. A fountain pen overflow ink collector according to claim 3, wherein at the outer conical surface and at the surface of the tapering bore of each hub portion the edges of the walls defining the transfer groove are radiused.

5. A fountain pen overflow ink collector according to claim 3, wherein each washer is provided with a peripheral notch in its fin portion diametrically opposite to the transfer groove in the hub portion.

References Cited in the file of this patent

UNITED STATES PATENTS

1,706,923	Hartline	Mar. 26, 1929
2,158,615	Wright	May 16, 1939
2,514,729	Snodgrass	July 11, 1950
2,681,041	Zodtner et al.	June 15, 1954
2,684,052	Rickmeyer	July 20, 1954

UNITED STATES PATENT OFFICE

CERTIFICATE OF CORRECTION

Patent No. 3,115,119 December 24, 1963

Homer Theodore Green

It is hereby certified that error appears in the above numbered patent requiring correction and that the said Letters Patent should read as corrected below.

Column 1, line 20, after "ink" insert -- then --; line 28, for "other" read -- another --; column 2, line 35, after "rather" insert -- than --; line 57, after "Therefore," insert -- for --; column 3, line 2, for "infiinite" read -- infinite --; line 6, for "12" read -- 13 --; same line 6, after "in" insert -- the --; column 4, line 5, for "raidal" read -- radial --; line 15, after "point," insert -- and --; line 29, for "an-" read -- an --.

Signed and sealed this 2nd day of June 1964.

(SEAL)
Attest:

ERNEST W. SWIDER
Attesting Officer

EDWARD J. BRENNER
Commissioner of Patents